SiRUBA GAGE PARTS LIST	Series	Remark	Page	Date
	700KS		1 / 1	2018/09/18

	機型 Model	針板 Needle Plate	送具 Feed Dog		送具 Feed Dog	押具 Presser Foot	衝程 Crank	大心 Crank Shaft	針鎰 Needle Clamp	勾針連桿座 Upper Looper Holder	上勾針 Upper Looper	下勾針 Lower Looper	針 Needle
737KS	505F-2-04	E304	D517	D516	H516	P152D-3A	KJ516-E	KD501	KG231K-E	KJ508	LP526	KL502A	DCX27#11
	505F-2-04/ESK	E304	D517	D516	H516	P152D-3A	KJ516-E	KD501	KG231K-E	KJ508	LP526	KL502A	DCX27#11
	505F-2-04/ESK/VT	E304	D517	D516	H516	P152D-3A	KJ516-E	KD501	KG231K-E	KJ508	LP526	KL502A	DCX27#11
	505F-2-04/ESSK/VT	E304	D517	D516	H516	P152D-3A	KJ516-E	KD501	KG231K-E	KJ508	LP526	KL502A	DCX27#11
	504M-3-03	E503	D515	D516	H515	P987-3A	KJ516-E	KD501	KG231K-E	KJ508	LP526	KL502A	DCX27#11
	504M-3-04	E504	D515	D516	H515	P987-3A	KJ516-E	KD501	KG231K-E	KJ508	LP526	KL502A	DCX27#11
	504M-3-04/LFD6-K	E324K	D515A	D117K	H517	P212A-A1	KJ516-E	KD501	KG231K-E	KJ508	LP526	KL502A	DCX27#11
	504M-3-04/LFD6A-K	E324K	D515A	D117K	H517	P212A-3A1	KJ516-E	KD501	KG231K-E	KJ508	LP526	KL502A	DCX27#11
	504M-3-05	E505	D515	D516	H515	P987-3A	KJ516-E	KD501	KG231K-E	KJ508	LP526	KL502A	DCX27#11
	504H-3-03	E513	D515A	D117K	H517	P987-3A	KJ513-E	KD501B	KG231K-E	KJ528	LP519	KL502A	DCX27#11
	504H-3-04	E324K	D515A	D117K	H517	P987-3A	KJ513-E	KD501B	KG231K-E	KJ528	LP519	KL502A	DCX27#11
	504H-3-05	E515	D515A	D117K	H517	P987-3A	KJ513-E	KD501B	KG231K-E	KJ528	LP519	KL502A	DCX27#11
747KS	514M-3-23	E523	D515	D516	H515	P987-4A	KJ513-E	KD501	KG242K-E	KJ508	LP518	KL502	DCX27#11*2
	514M-3-24	E424	D515	D516	H515	P987-4A	KJ513-E	KD501	KG242K-E	KJ508	LP518	KL502	DCX27#11*2
	514M-3-24/LFD6-K	E434K	D515A	D117K	H517	P212A-2A1	KJ513-E	KD501	KG242K-E	KJ508	LP518	KL502	DCX27#11*2
	514M-3-24/LFD6-K1	E434K	D515A	D117K	H517	P212A-2A1	KJ513-E	KD501	KG242K-E	KJ508	LP518	KL502	DCX27#11*2
	514M-3-24/LFD6A-K	E434K	D515A	D117K	H517	P212A-4A1	KJ513-E	KD501	KG242K-E	KJ508	LP518	KL502	DCX27#11*2
	514M-3-24/LFD6A-K1	E434K	D515A	D117K	H517	P212A-4A1	KJ513-E	KD501	KG242K-E	KJ508	LP518	KL502	DCX27#11*2
	514M-3-25	E525	D515	D516	H515	P987-4A	KJ513-E	KD501	KG242K-E	KJ508	LP518	KL502	DCX27#11*2
	514H-3-23	E533	D515A	D117K	H517	P987-4A	KJ513-E	KD501B	KG242K-E	KJ528	LP519	KL502A	DCX27#11*2
	514H-3-24	E434K	D515A	D117K	H517	P987-4A	KJ513-E	KD501B	KG242K-E	KJ528	LP519	KL502A	DCX27#11*2
	514H-3-25	E535	D515A	D117K	H517	P987-4A	KJ513-E	KD501B	KG242K-E	KJ528	LP519	KL502A	DCX27#11*2

SIRUBA PARTS LIST	Series	Parts Group	Subclass / Remark	Page
	700KS	KA		1/1
				Date
				2017/1/12

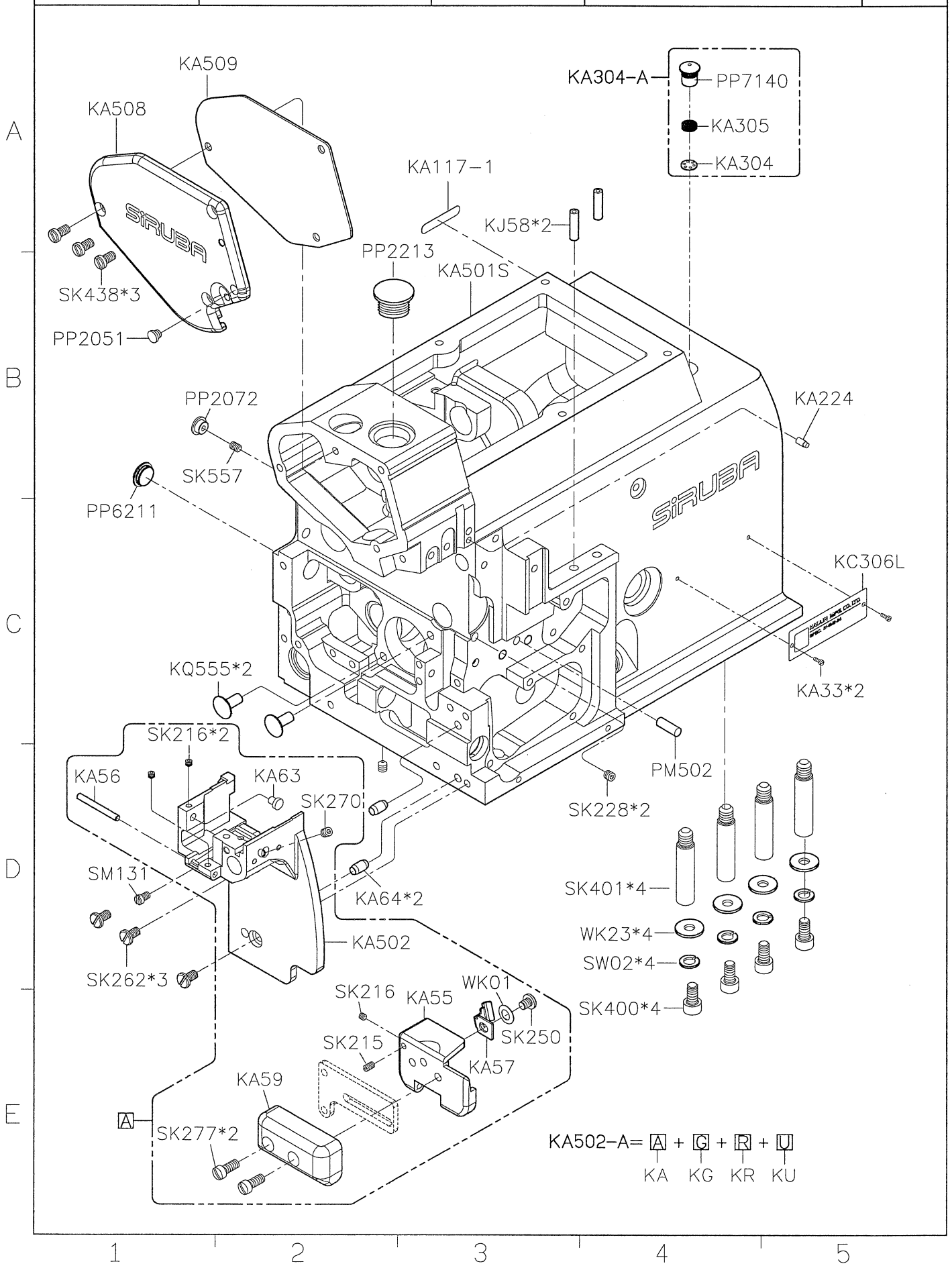

SIRUBA PARTS LIST	Series	Parts Group	Subclass / Remark	Page
	700KS	KB		1/1
				Date
				2018/07/05

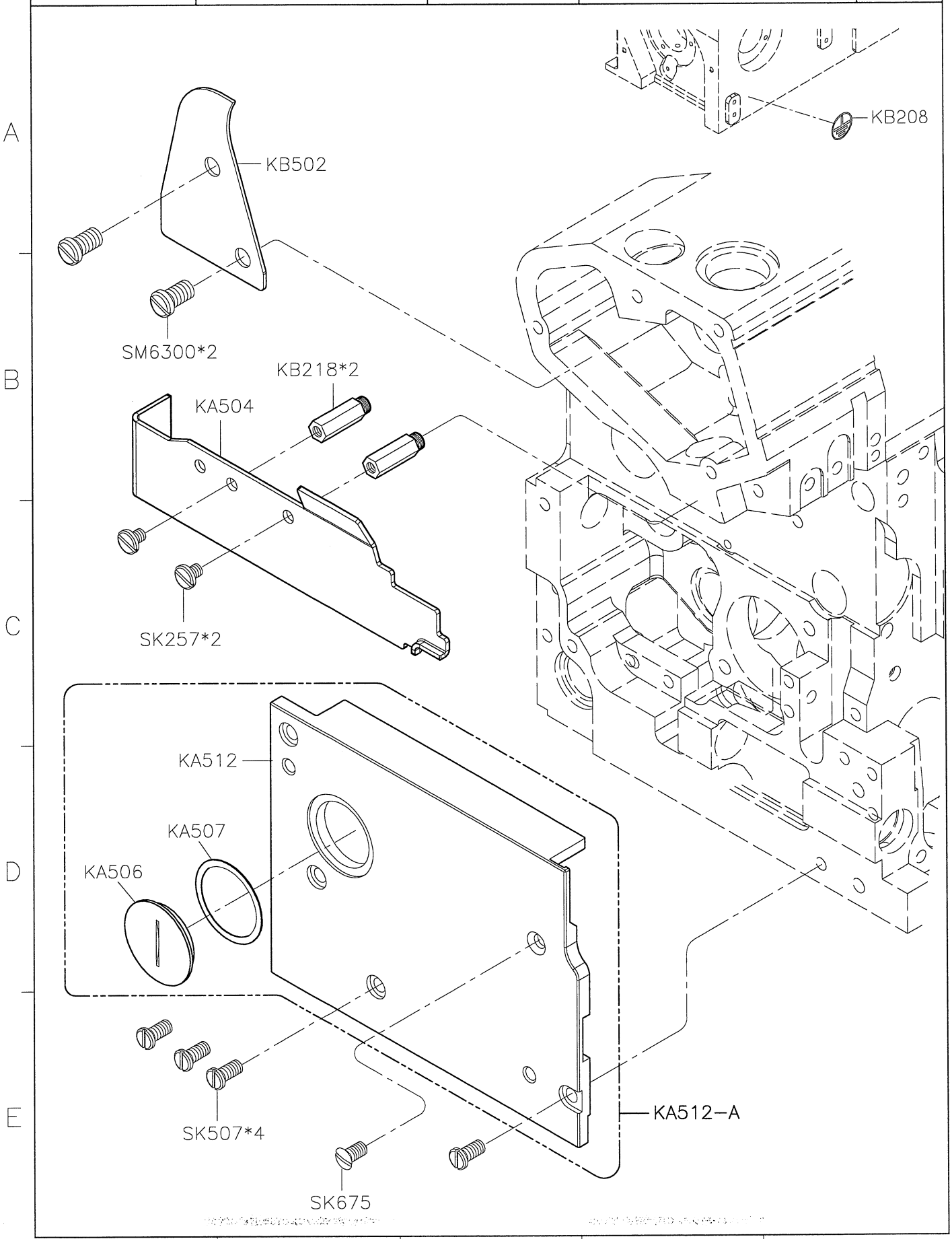

SiRUBA PARTS LIST	Series	Parts Group	Subclass / Remark	Page
	700KS	KC		1/1
				Date
				2022/11/04

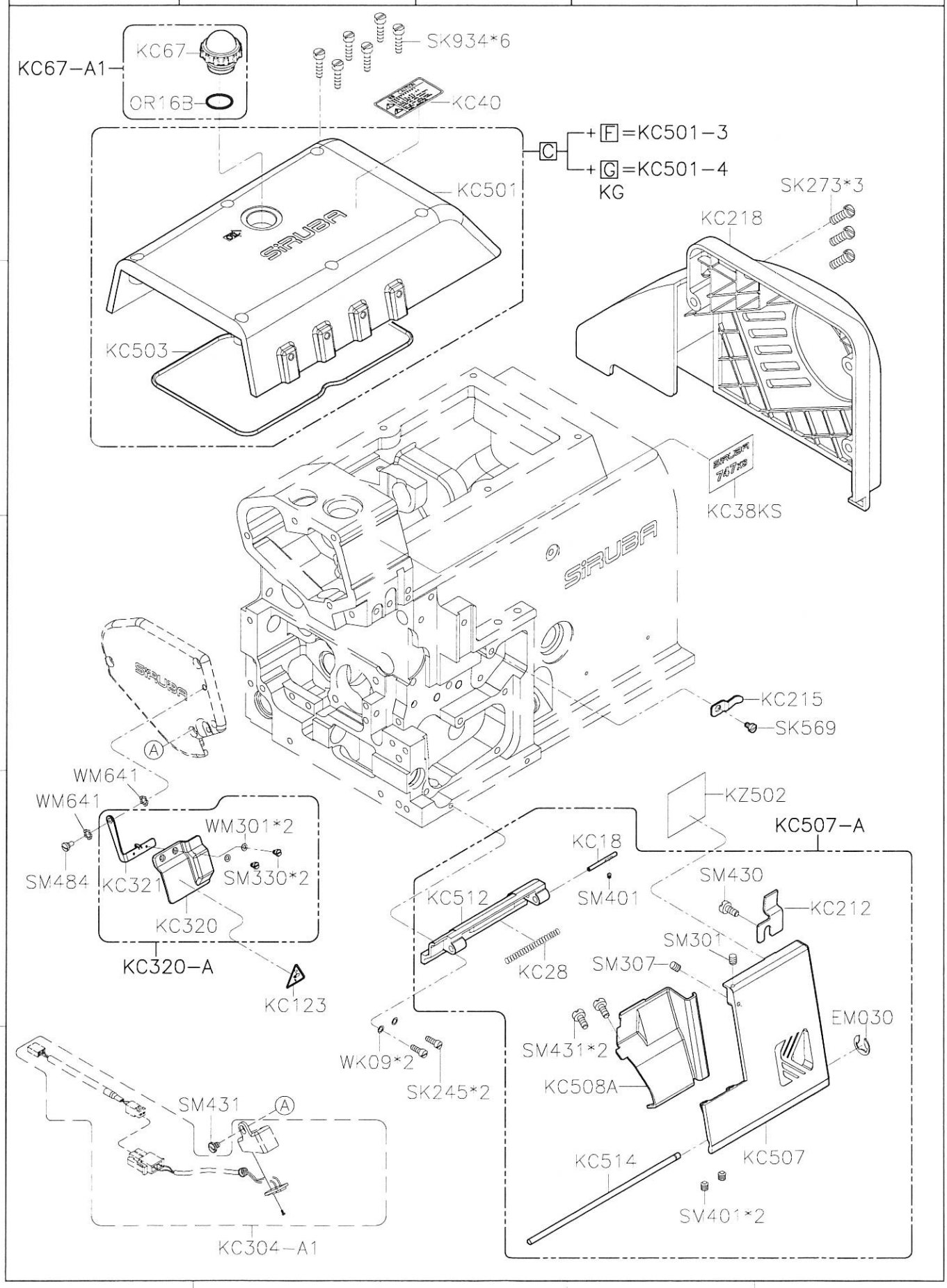

SIRUBA PARTS LIST	Series	Parts Group	Subclass / Remark	Page
	700KS	KD		1/1
				Date
				2017/2/14

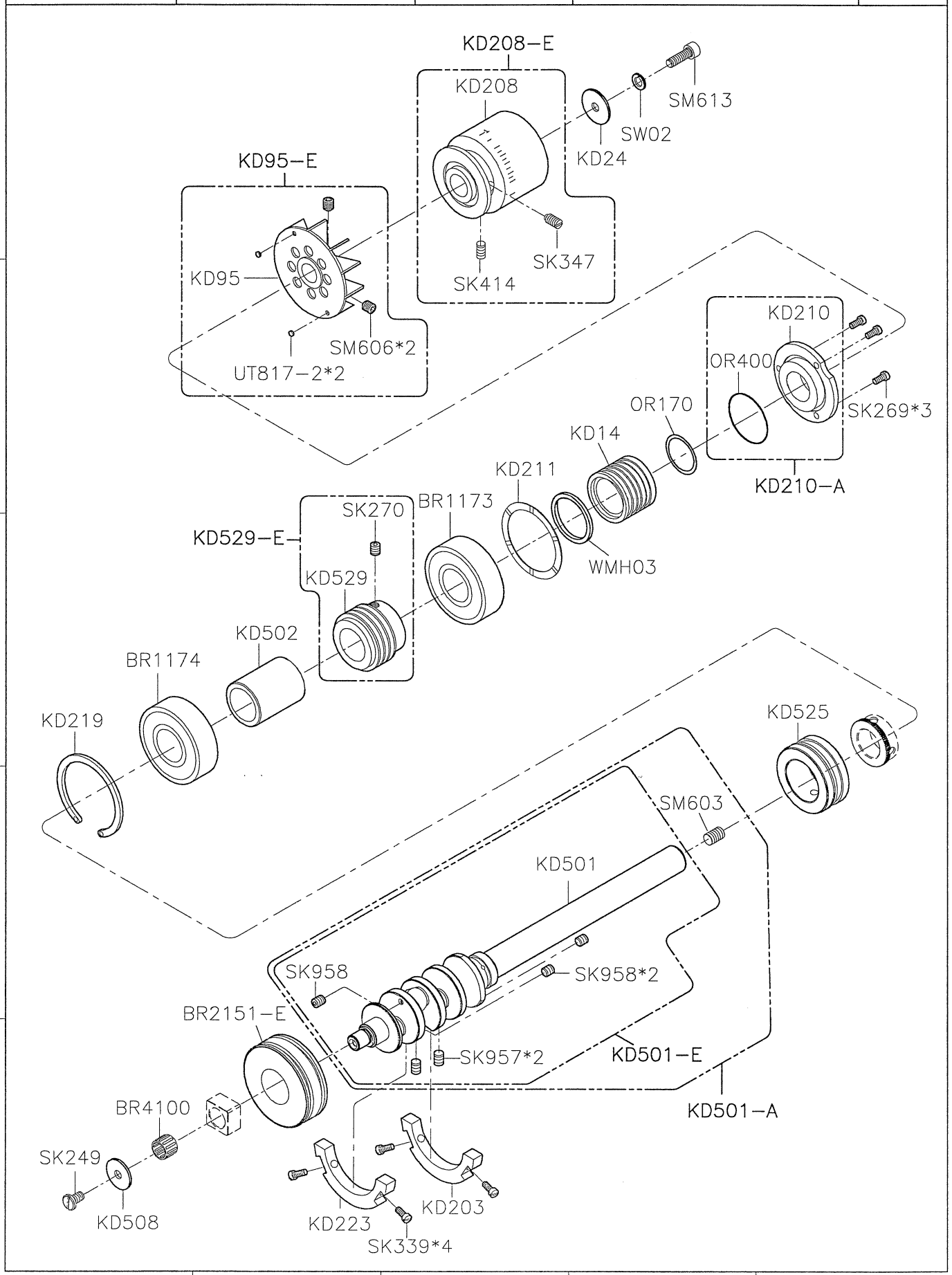

SIRUBA PARTS LIST	Series	Parts Group	Subclass / Remark	Page
	700KS	KF		1/1
				Date
				2022/04/06

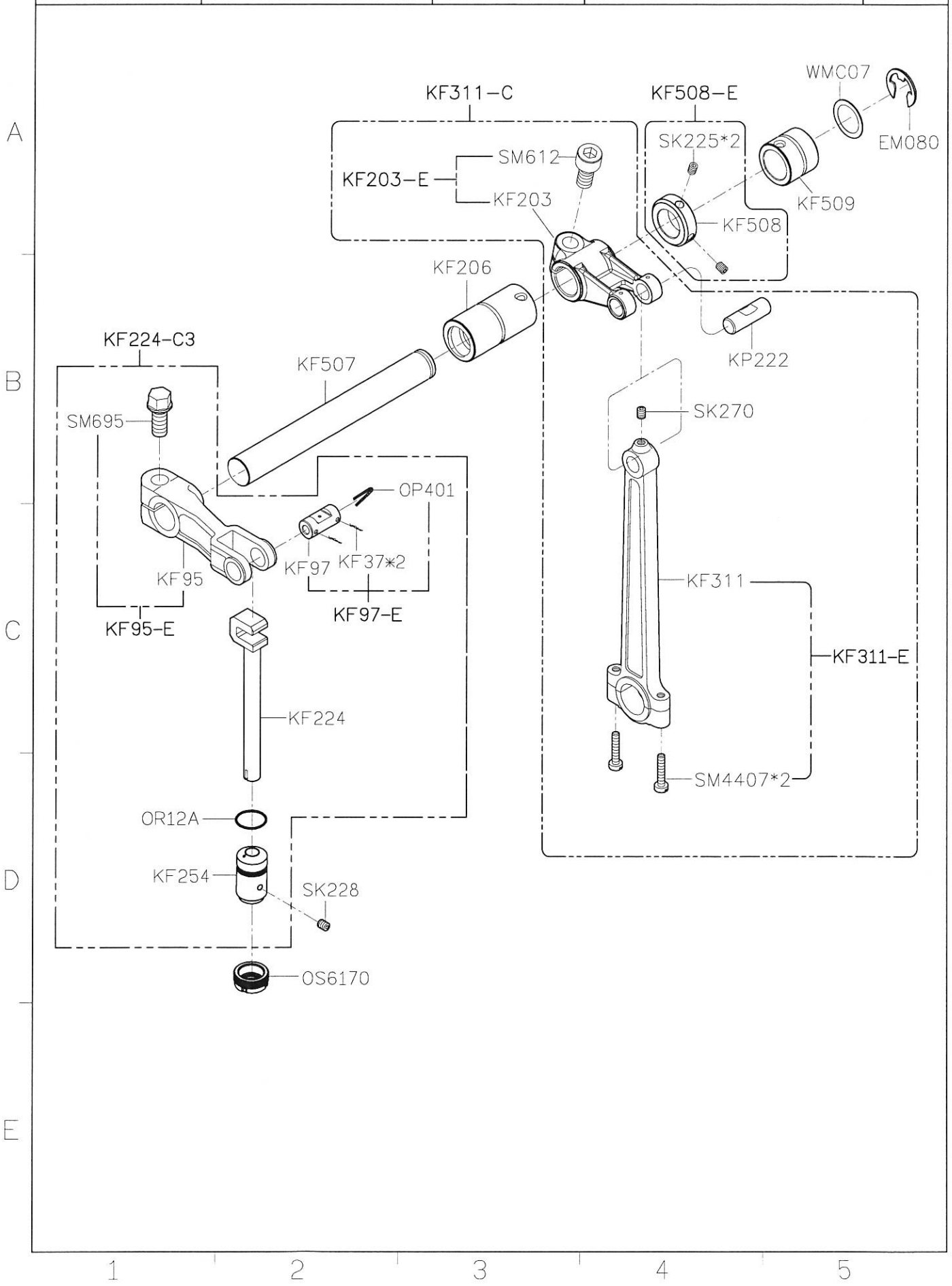

SiRUBA PARTS LIST	Series	Parts Group	Subclass / Remark	Page
	700KS	KG		1/1
				Date
				2019/04/18

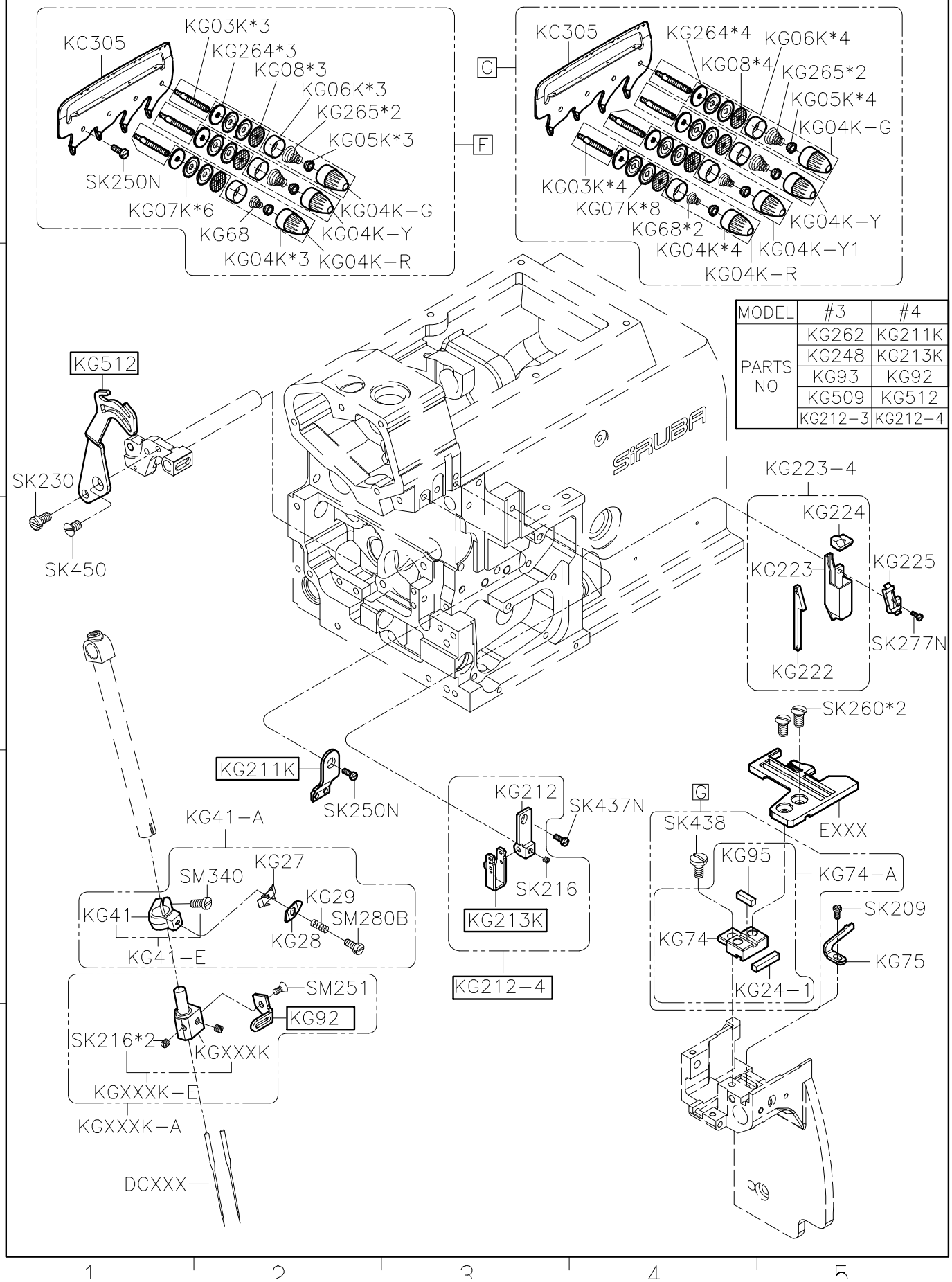

MODEL	#3	#4
PARTS NO	KG262	KG211K
	KG248	KG213K
	KG93	KG92
	KG509	KG512
	KG212-3	KG212-4

SIRUBA PARTS LIST	Series	Parts Group	Subclass / Remark	Page
	700KS	KJ	*Use For 514-M-3-28	1/1
				Date 2016/12/28

MODEL	#3	#4	M-3-28
PARTS NO	KJ516	KJ513	KJ513
	KJ516-E	KJ513-E	KJ513-E
	KJ516-C	KJ513-C	KJ513-C
	KJ502-E KJ504	KJ502-E KJ504	KJ204K

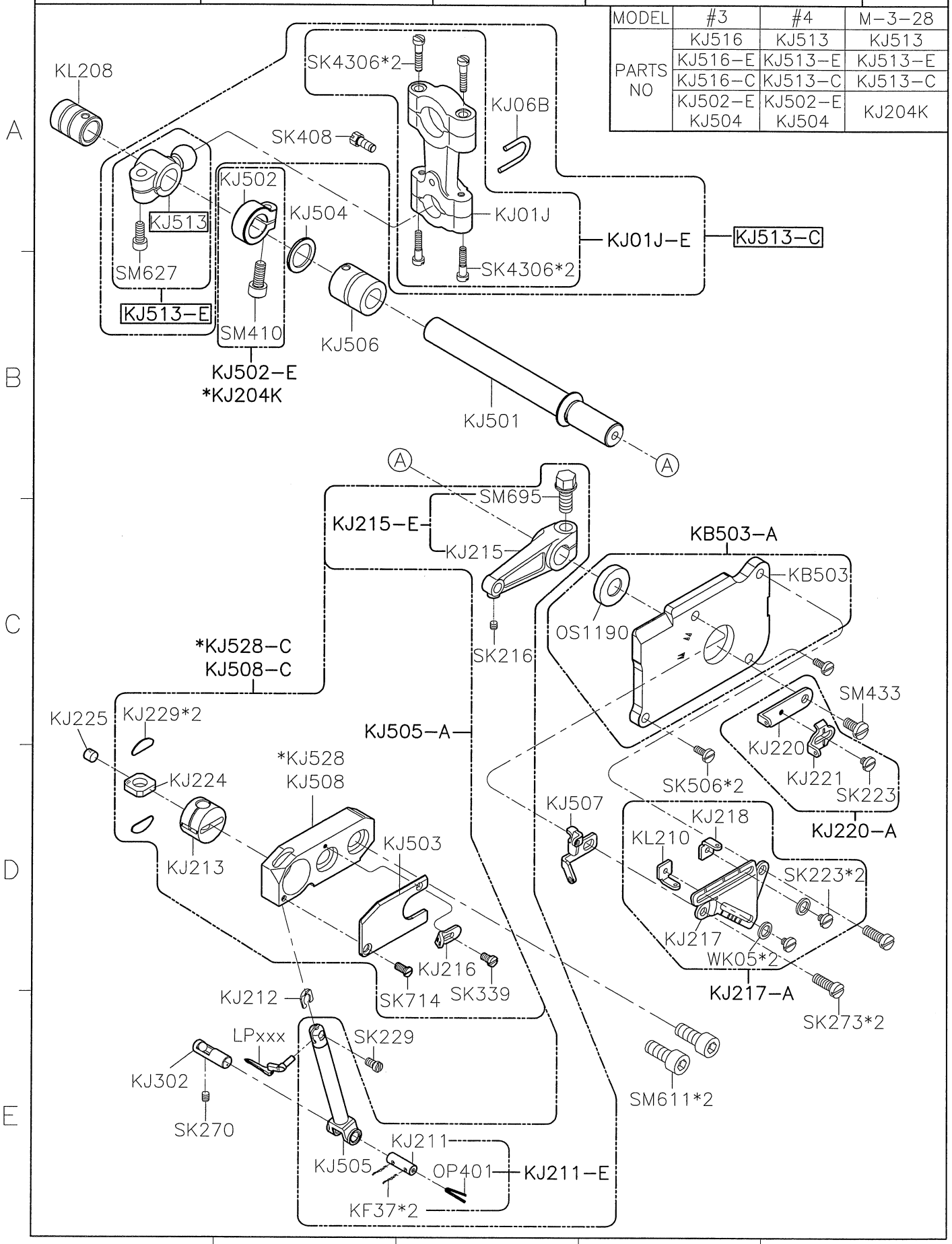

SIRUBA PARTS LIST	Series	Parts Group	Subclass / Remark	Page
	700KS	KL		1/1
				Date
				2019/01/24

MODEL	#3	#4
PARTS NO	KL502A	KL502
	KL514	KL514
	KL514-A1	KL514-A

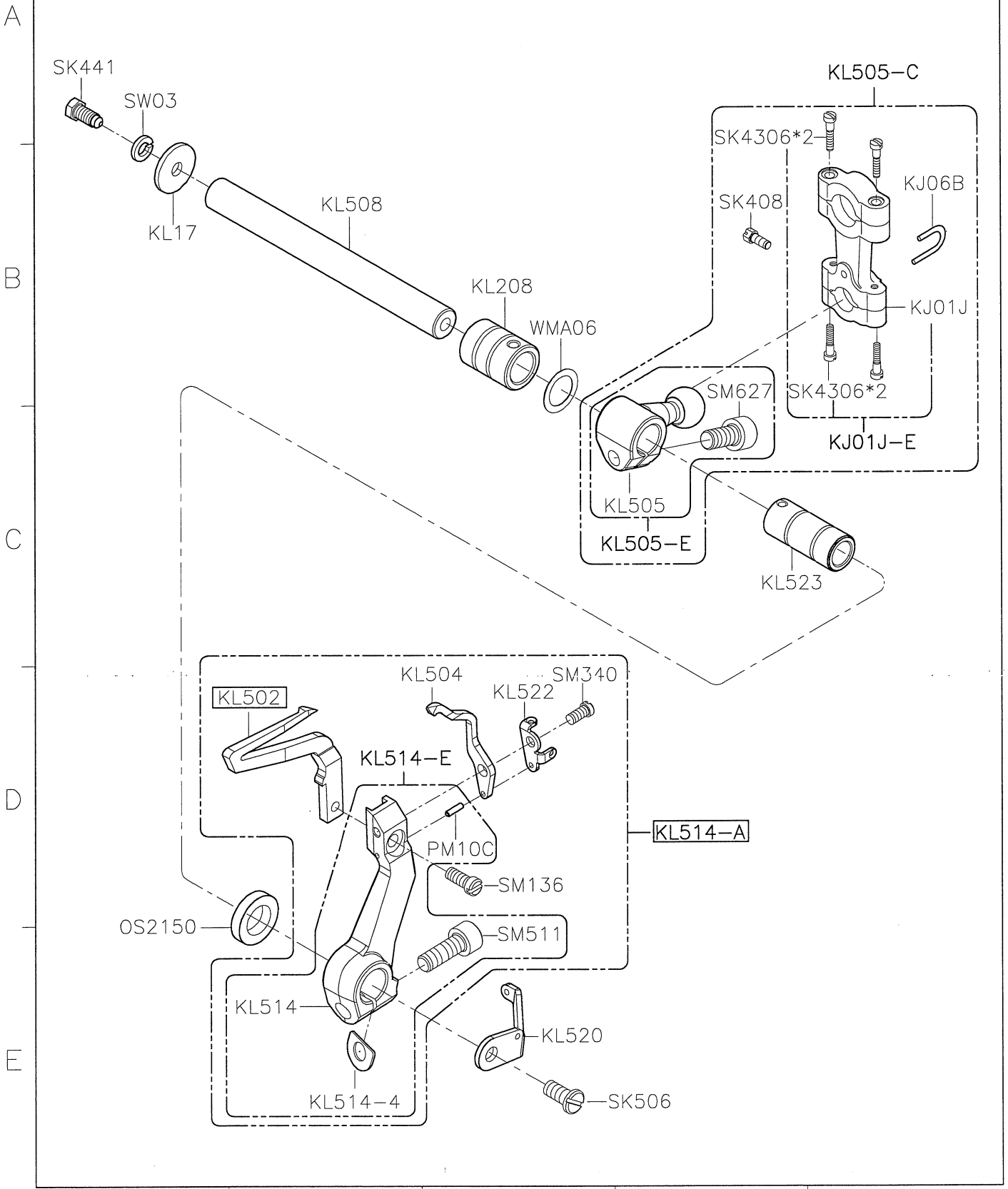

SIRUBA PARTS LIST	Series	Parts Group	Subclass / Remark	Page
	700KS	KP		1/1
				Date
				2017/2/2

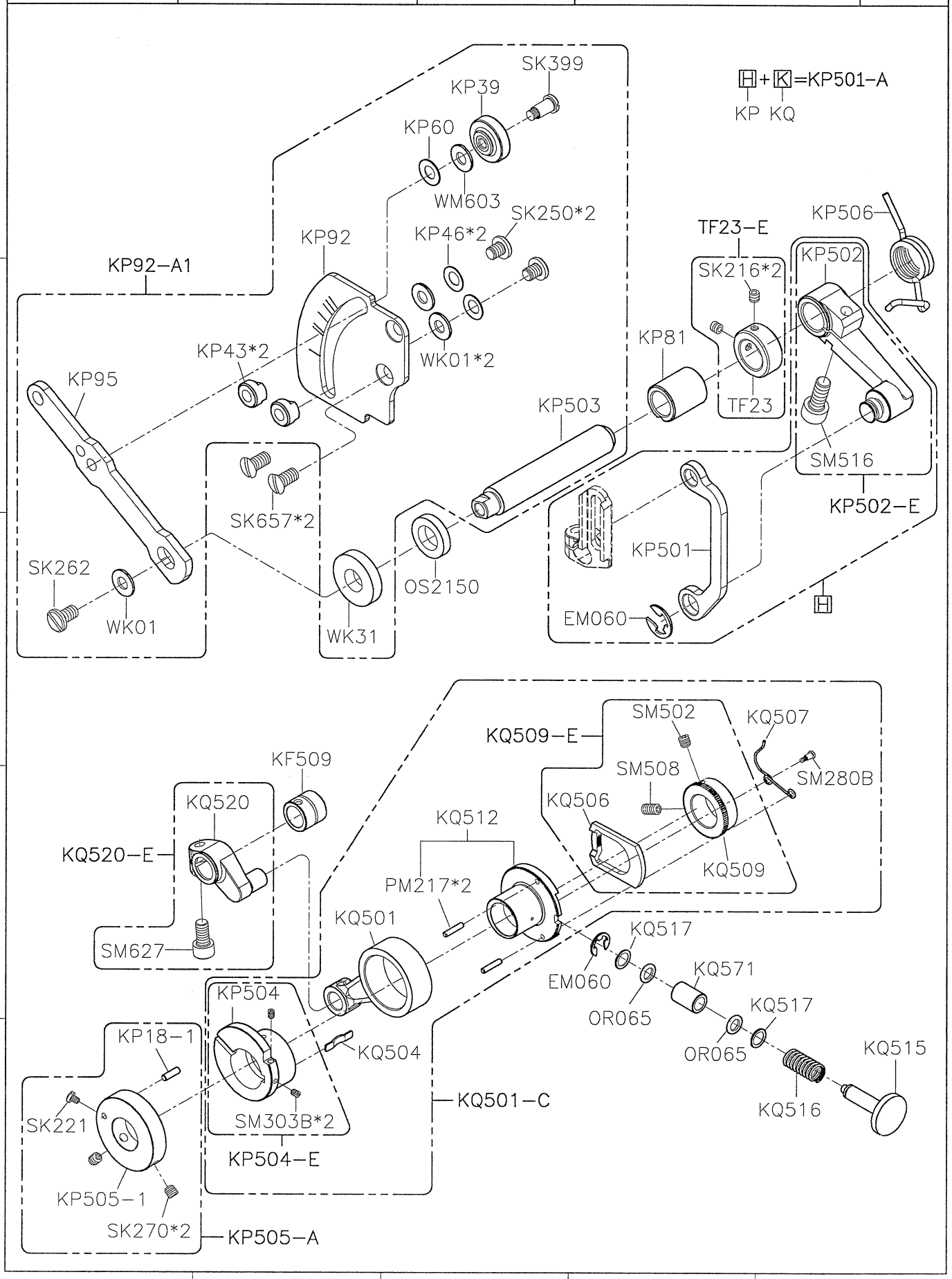

SIRUBA PARTS LIST	Series	Parts Group	Subclass / Remark	Page
	700KS	KQ		1/1
				Date
				2016/08/05

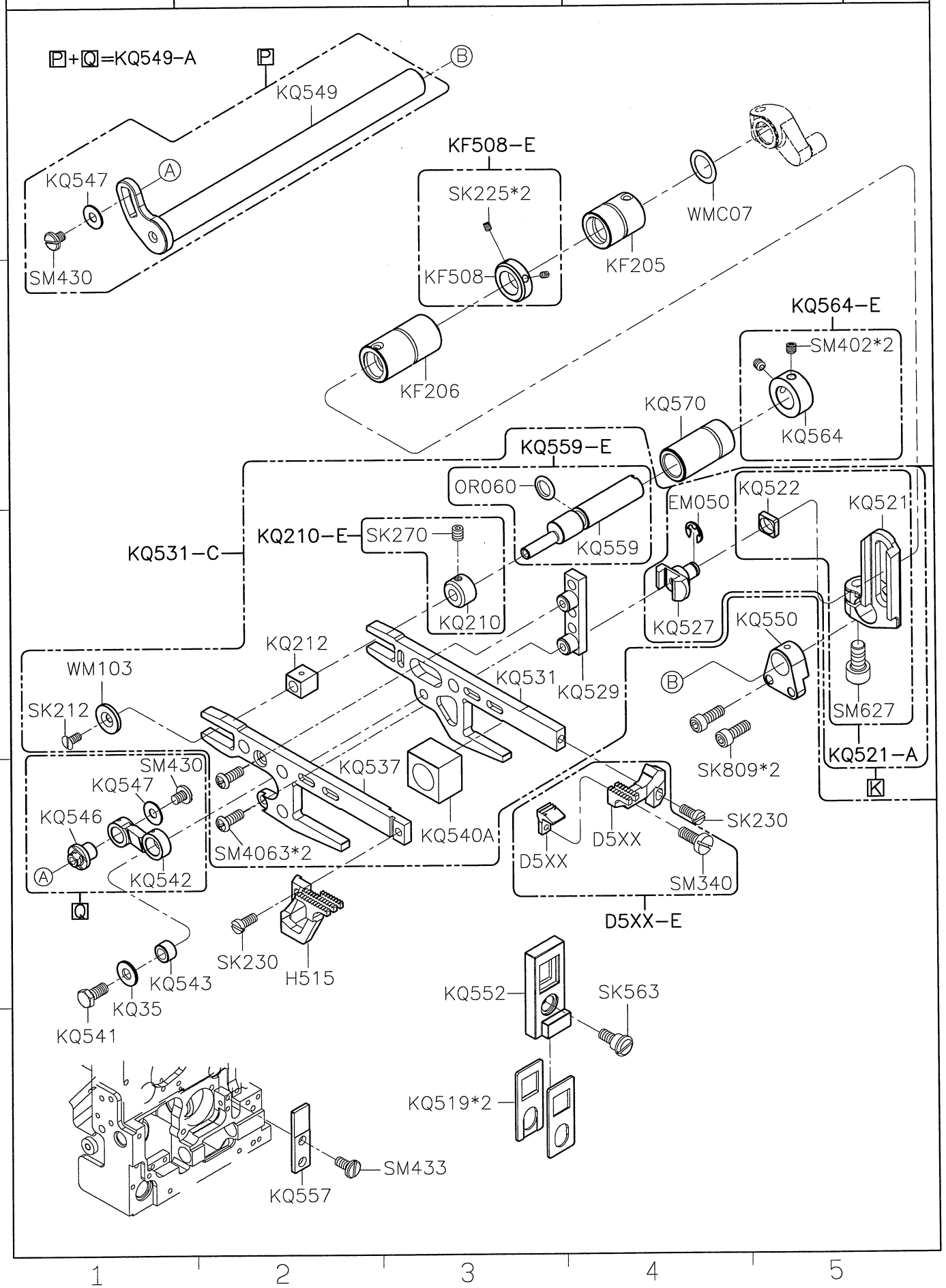

SIRUBA PARTS LIST	Series	Parts Group	Subclass / Remark	Page
	700KS	KR	• Use For 504-M-3-03	1/1
				Date
				2017/10/17

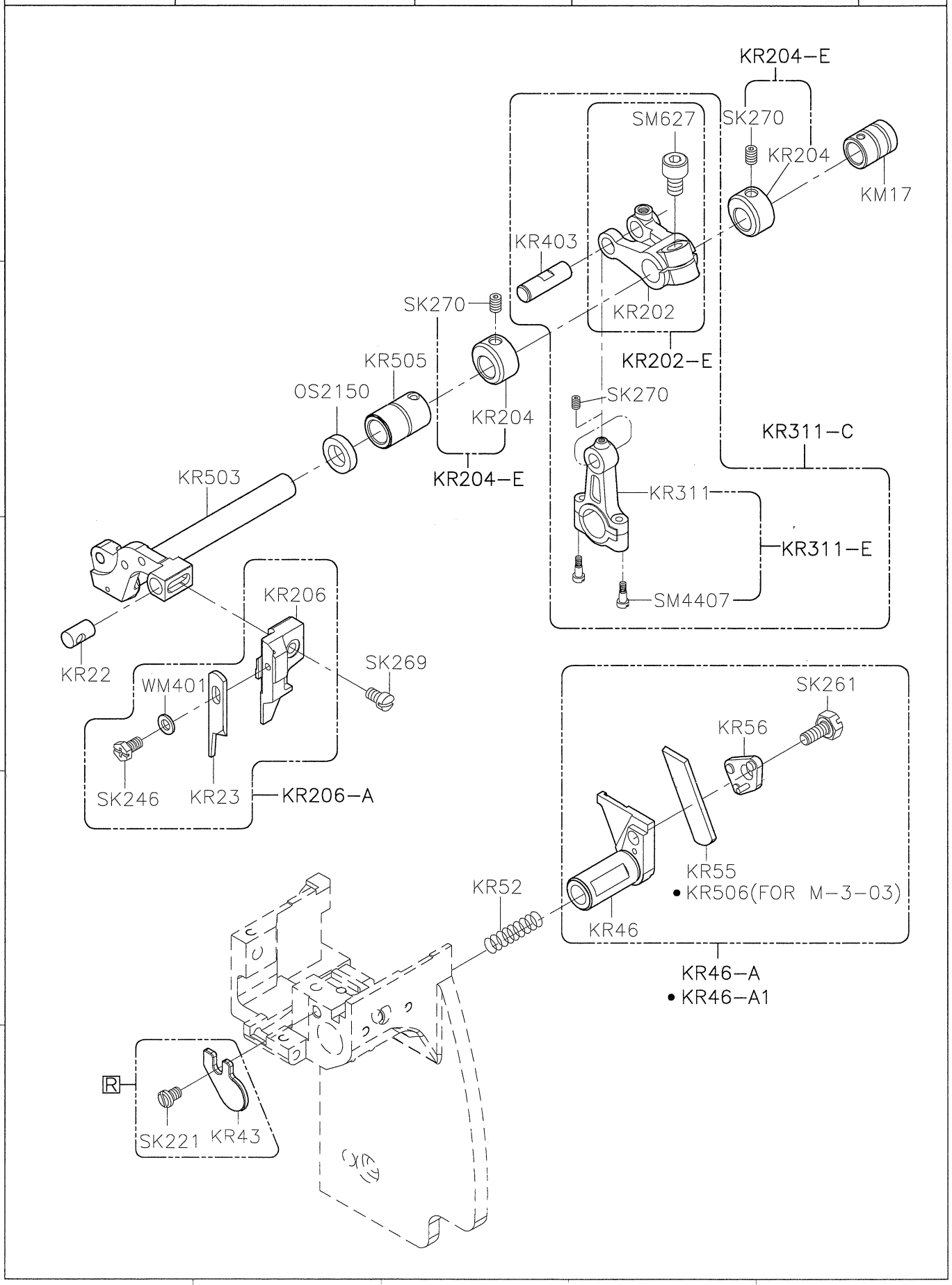

SIRUBA PARTS LIST	Series	Parts Group	Subclass / Remark	Page
	700KS	KS		1/1
				Date
				2020/11/25

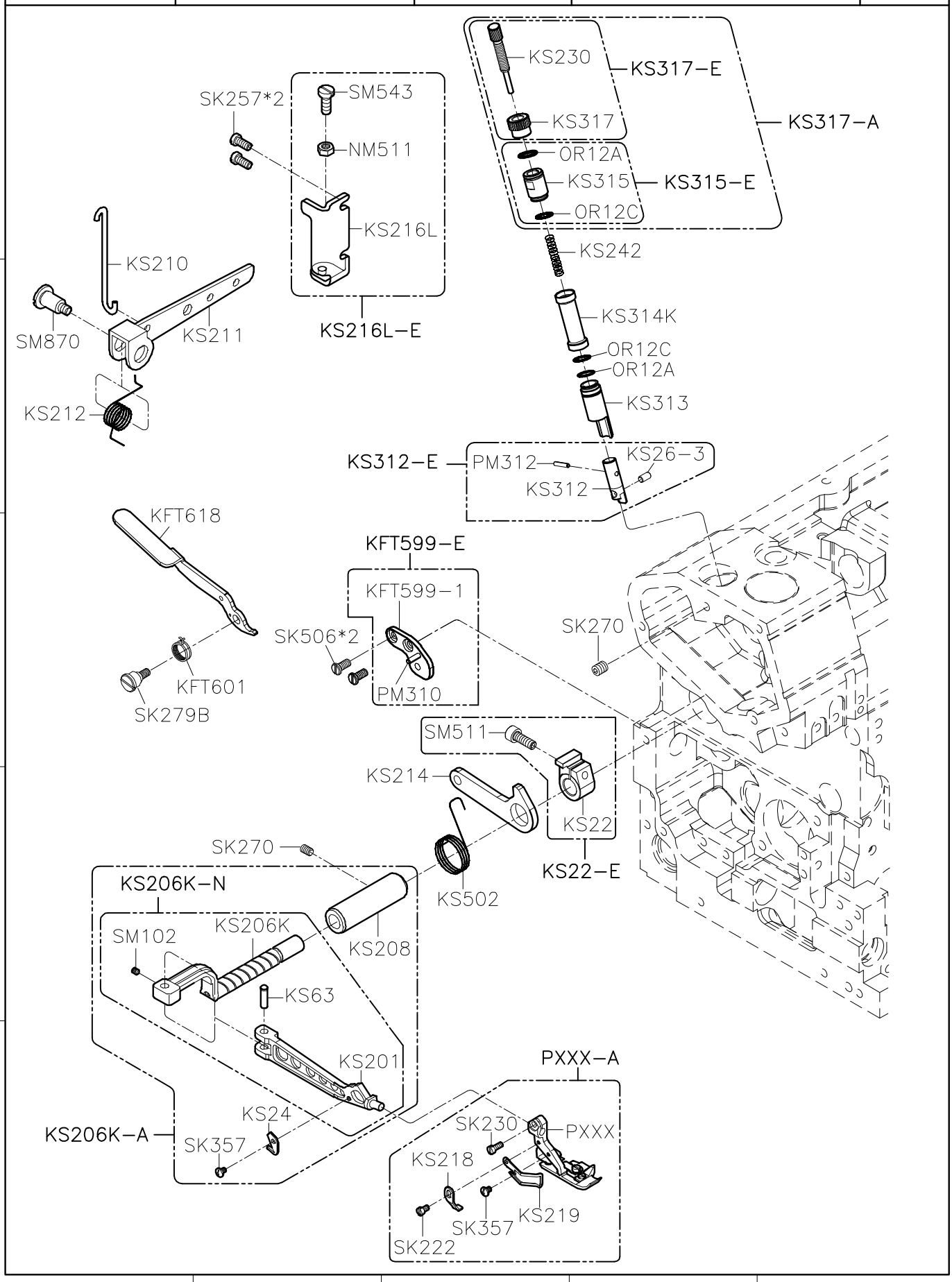

SiRUBA PARTS LIST	Series	Parts Group	Subclass / Remark	Page
	700KS	KT		1/1
				Date
				2022/12/16

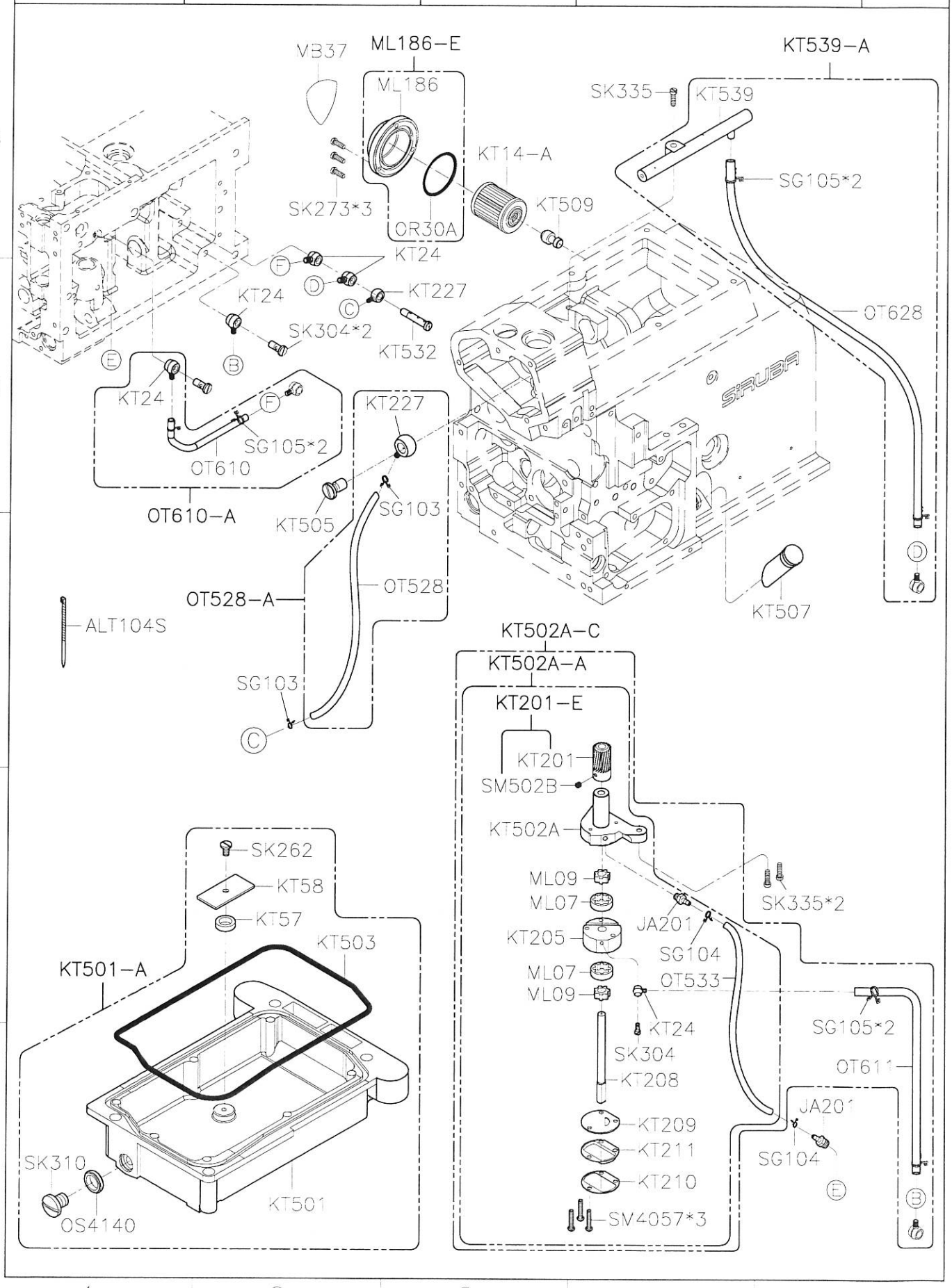

SIRUBA PARTS LIST	Series	Parts Group	Subclass / Remark	Page
	700KS	KU		1/2
				Date
				2018/10/12

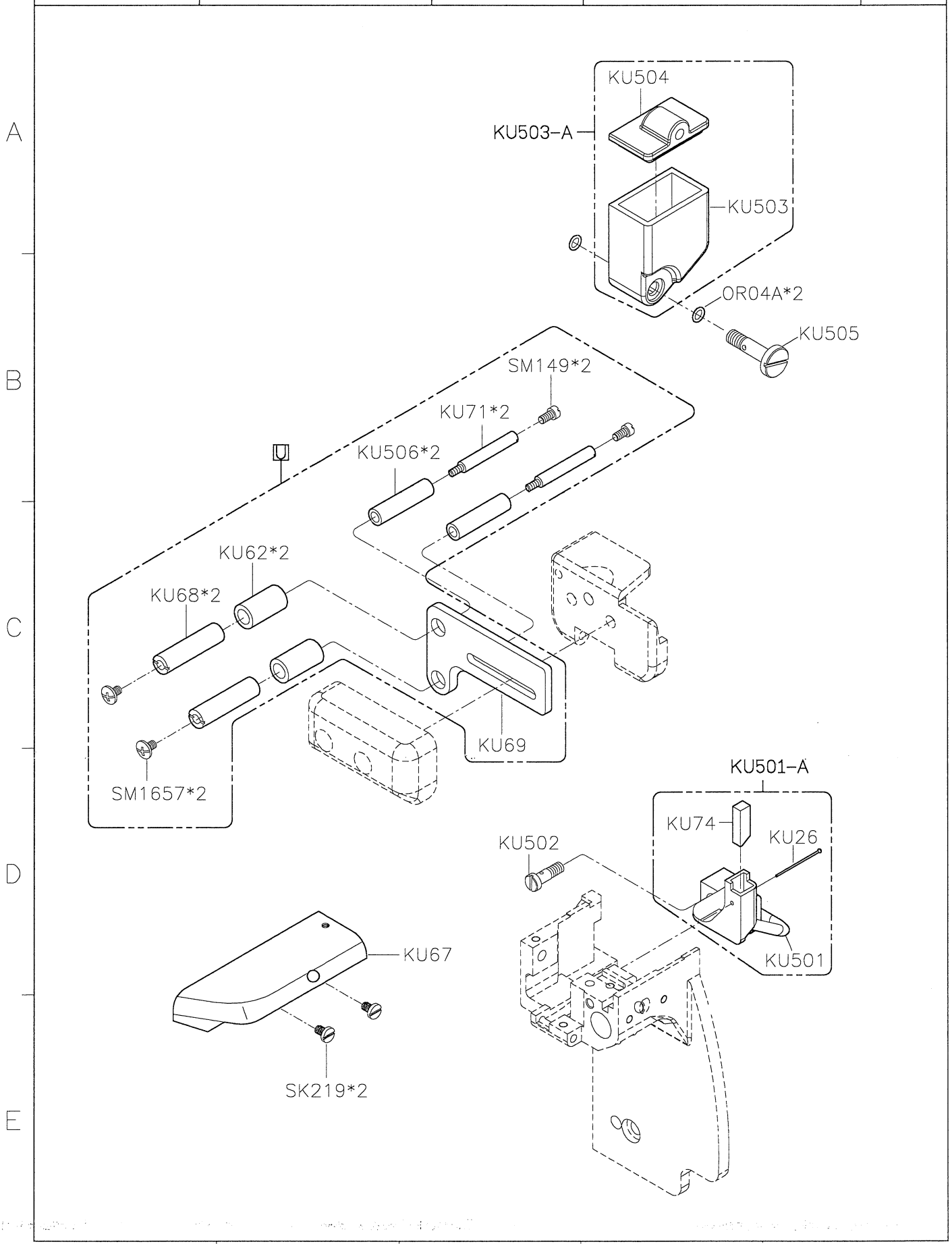

SIRUBA PARTS LIST	Series	Parts Group	Subclass / Remark	Page
	700KS	KU	For 505F-02-04用	2/2
				Date
				2018/10/12

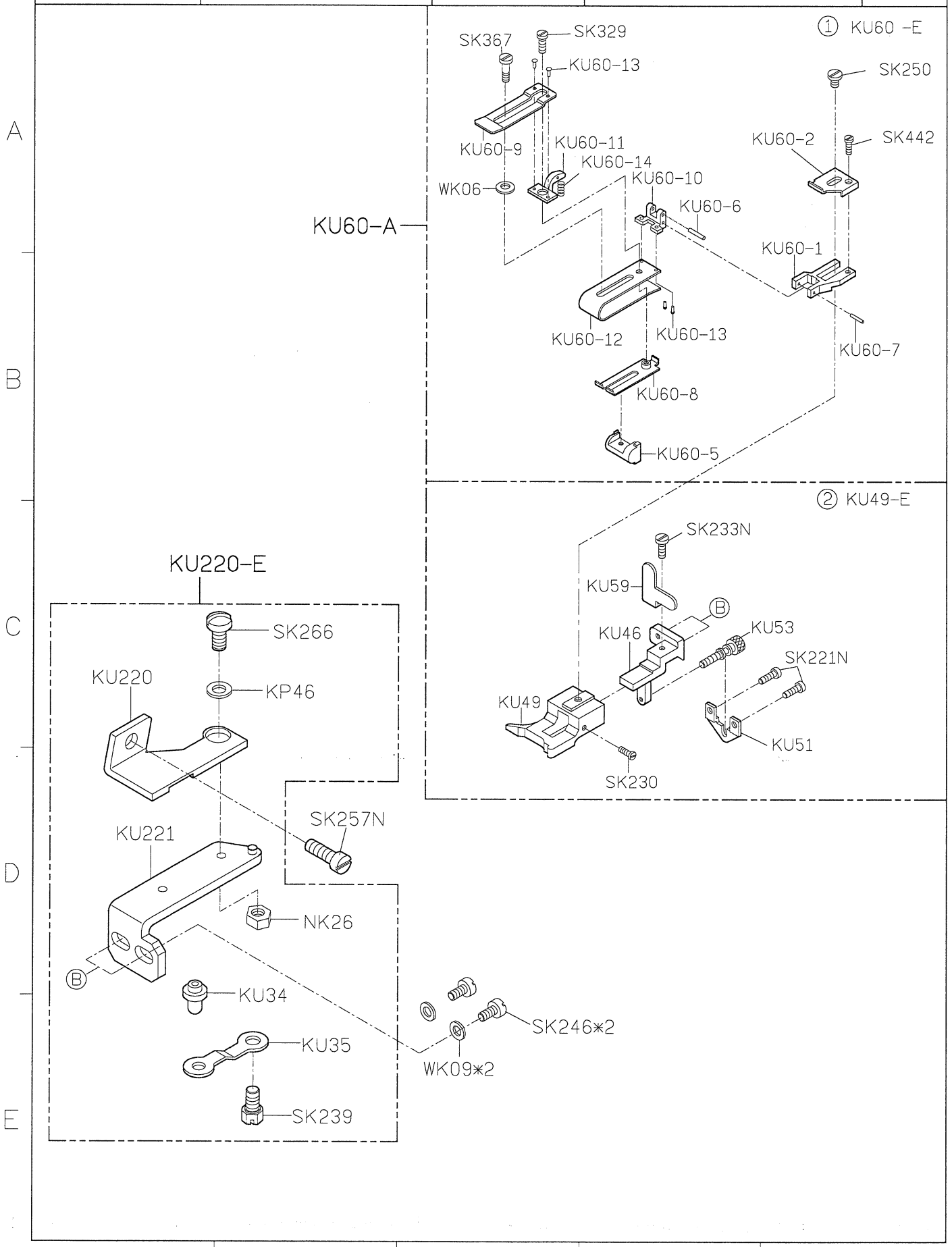

SIRUBA PARTS LIST	Series	Parts Group	Subclass / Remark	Page
	拷克 Overlock 含MO6800系列	KW		1/4
				Date 2022/07/11

KW40E-3

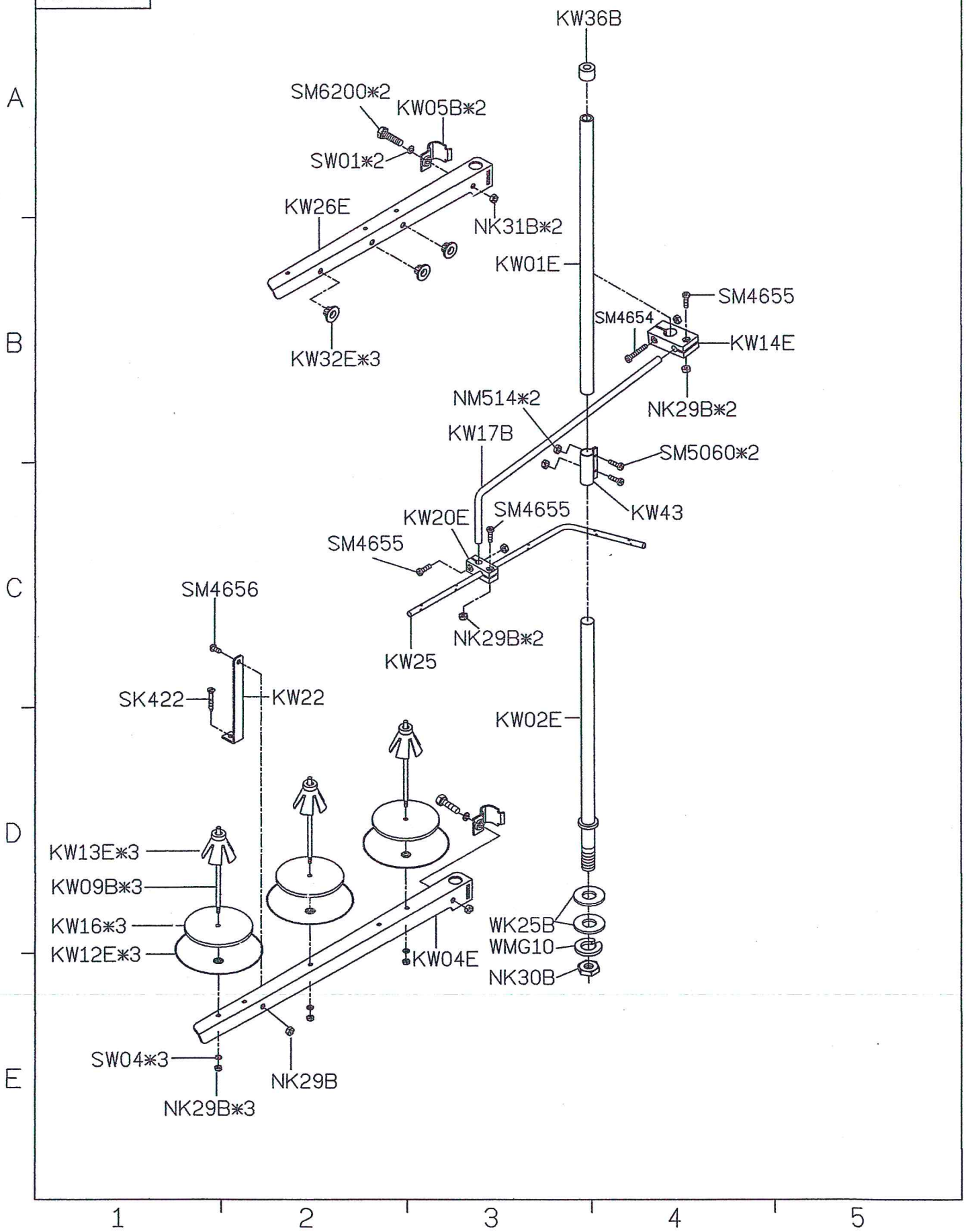

SiRUBA PARTS LIST	Series	Parts Group	Subclass / Remark	Page
	拷克 Overlock 含MO6800系列	KW		2/4
				Date
				2022/07/11

KW40E-4

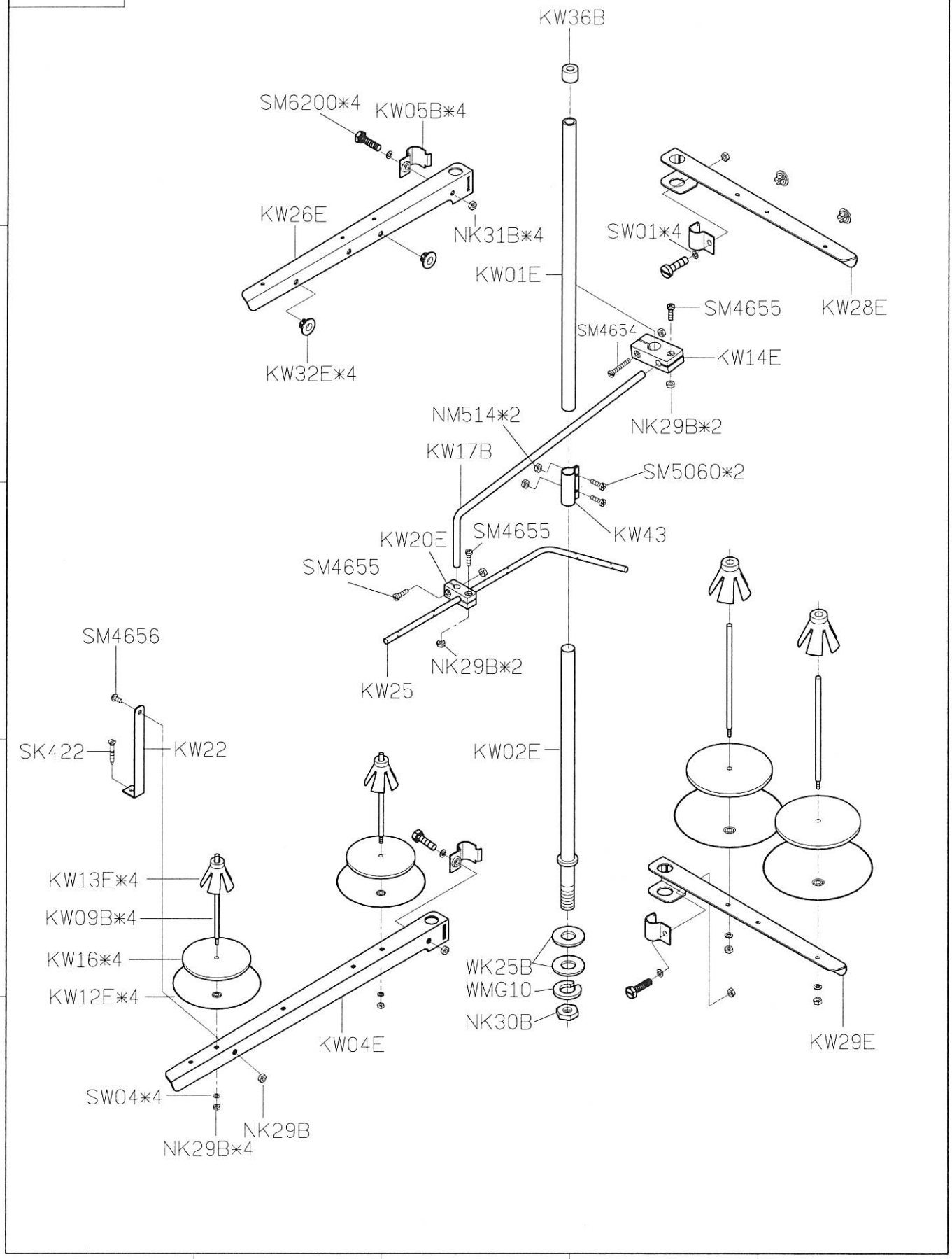

SIRUBA PARTS LIST	Series	Parts Group	Subclass / Remark	Page
	拷克 Overlock 含MO6800系列	KW		3/4
				Date 2022/07/11

KW40E-5

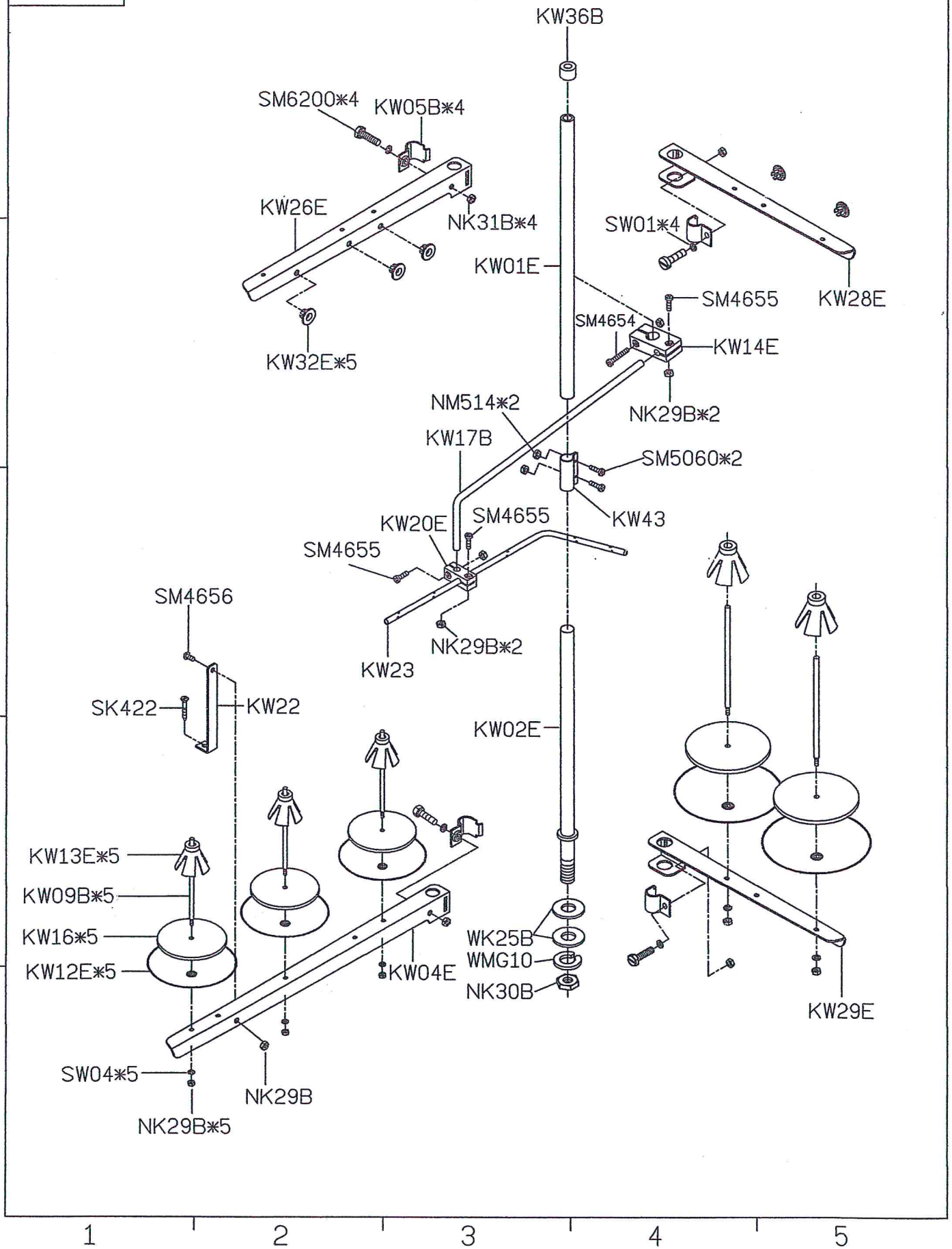

SiRUBA PARTS LIST	Series	Parts Group	Subclass / Remark	Page
	拷克 Overlock 含MO6800系列	KW		4/4
				Date 2022/07/11

KW40E-6

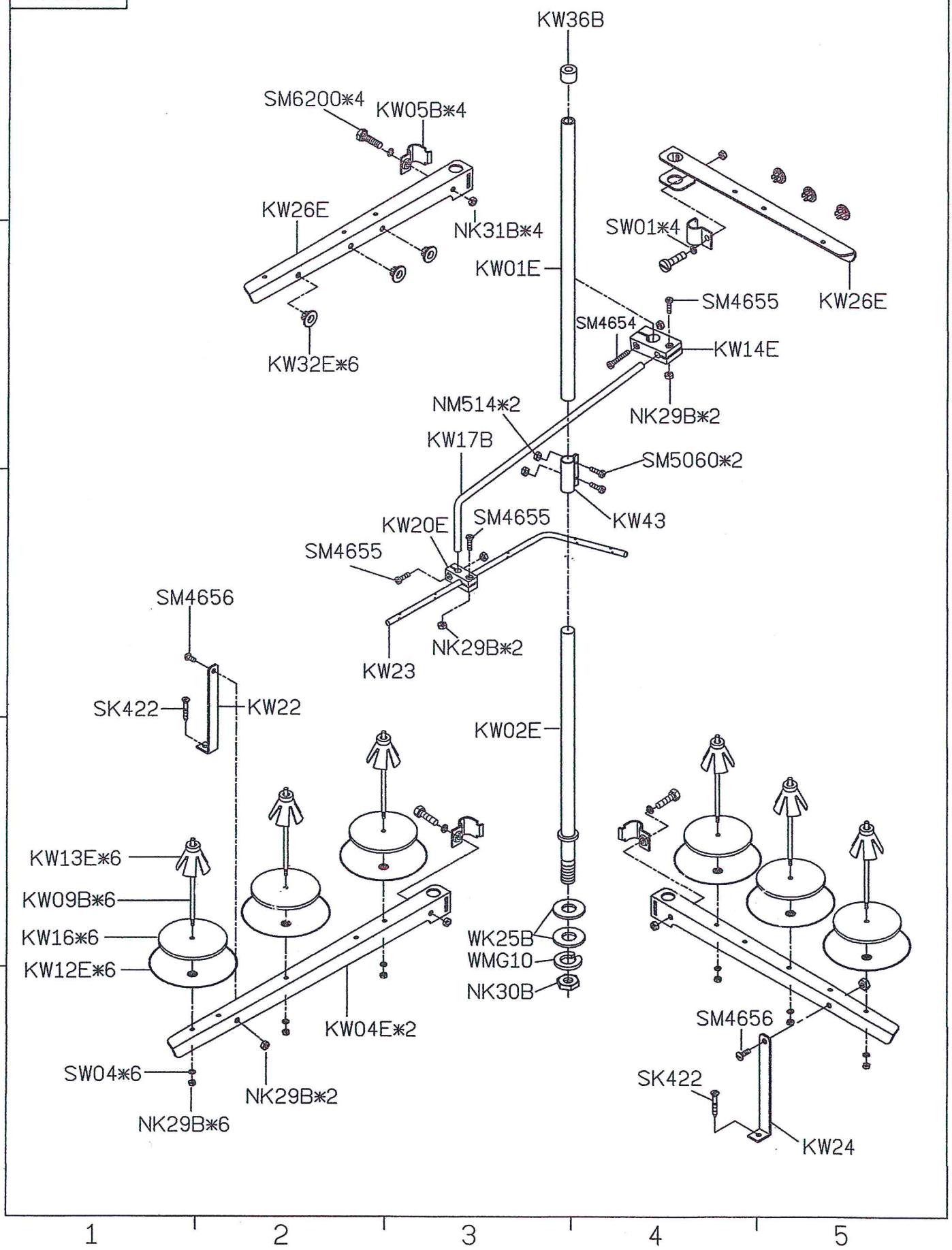

SIRUBA PARTS LIST	Series	Parts Group	Subclass / Remark	Page
	700KS	KX		1/1
				Date
				2014/03/05

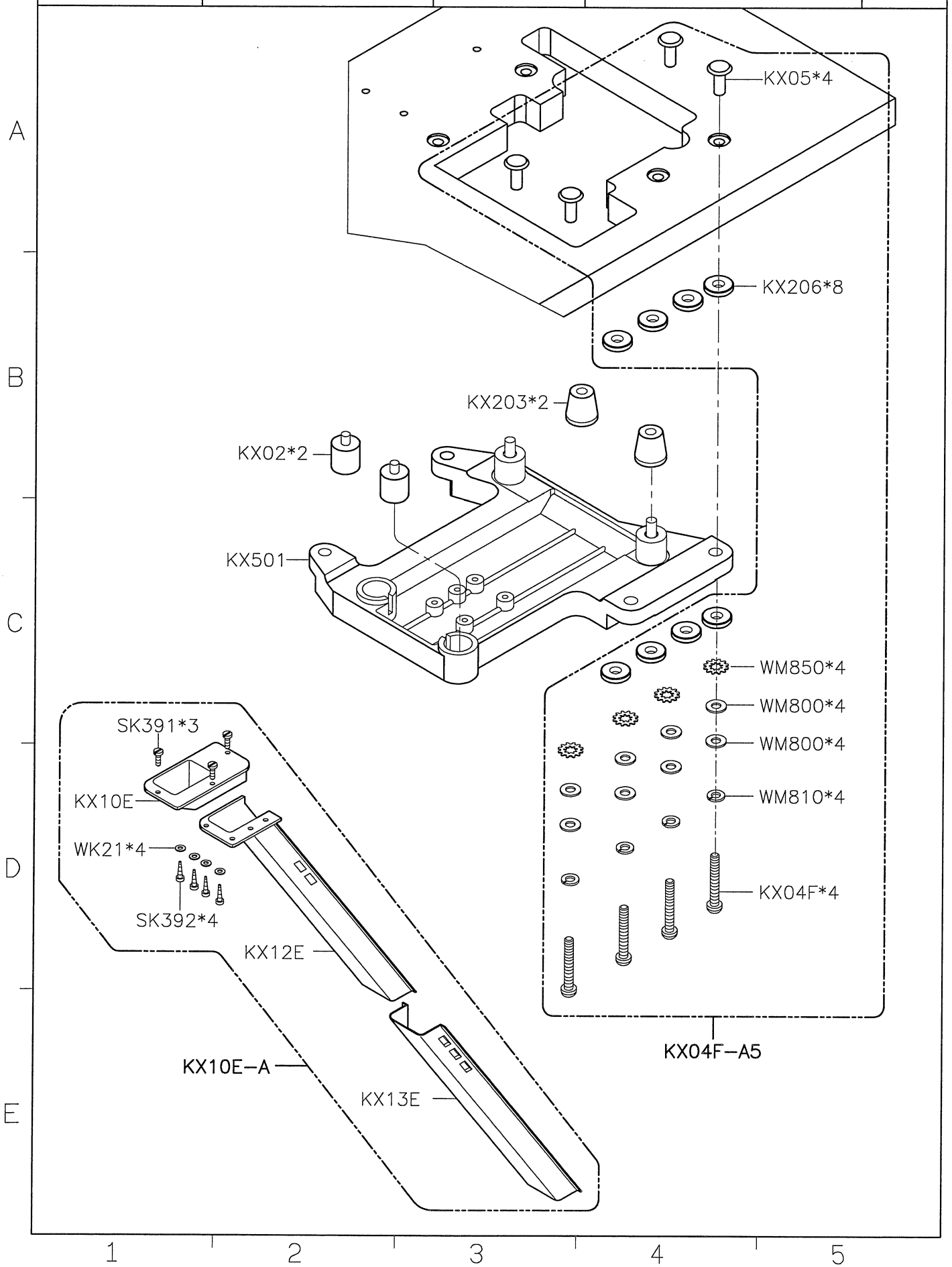

SiRUBA PARTS LIST	Series	Parts Group	Subclass / Remark	Page
	700KS	KY		1/1
				Date
				2020/12/01

KY01−1
防塵罩

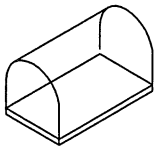

KY02F−A
油罐

KY03
油壺

KY04
漏斗

KY14
內六角螺絲起子

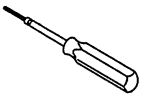

KY201JK
工具袋

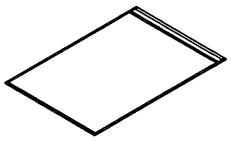

KY30
針板紙

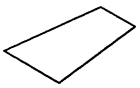

LY33
一字起子

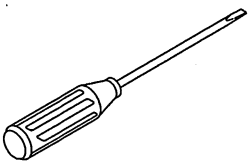

KY18
鑷子

SK216
螺絲

KT14−A
濾油器

KZ03
乾燥劑

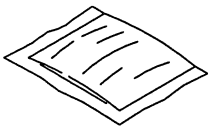

針*4
車針

LY35
一字起子

KR55
下刀片

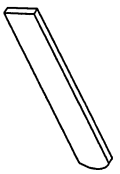

KY21−A/MY21−A
鉤子／鍊條

SiRUBA PARTS LIST	Series	Parts Group	Subclass / Remark	Page
	700KS	KZ		1/1
				Date
				2014/03/03

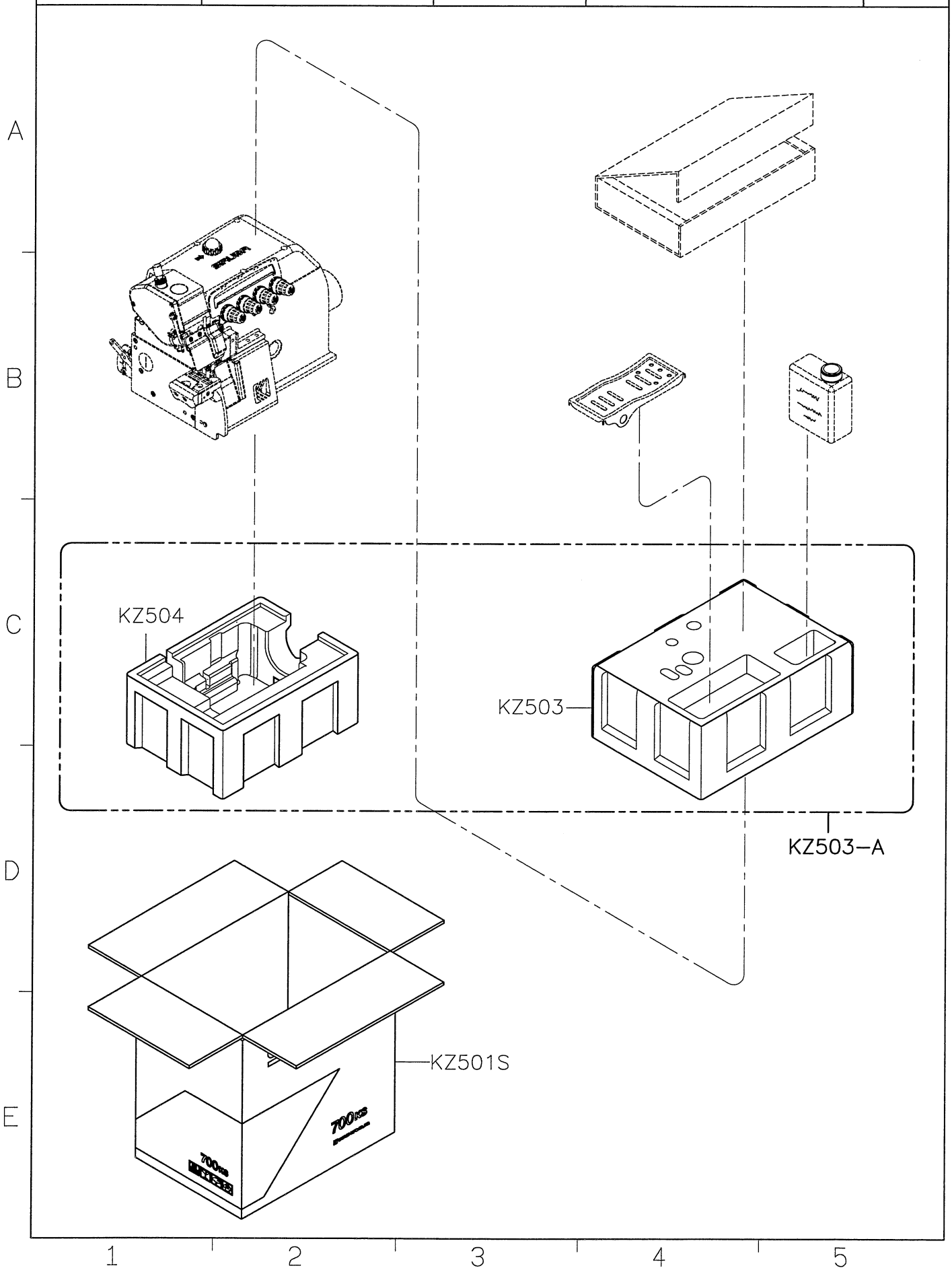

SiRUBA TABLE CUT - OUT	Series	Item Code	Subclass Remark	Mounting
	700KS/T	700KS-T	UNIT: mm TOLERANCE: ±2 WEIGHT: 11.6 kg ±5%	Semi-submerged
				Date
				2014/06/18

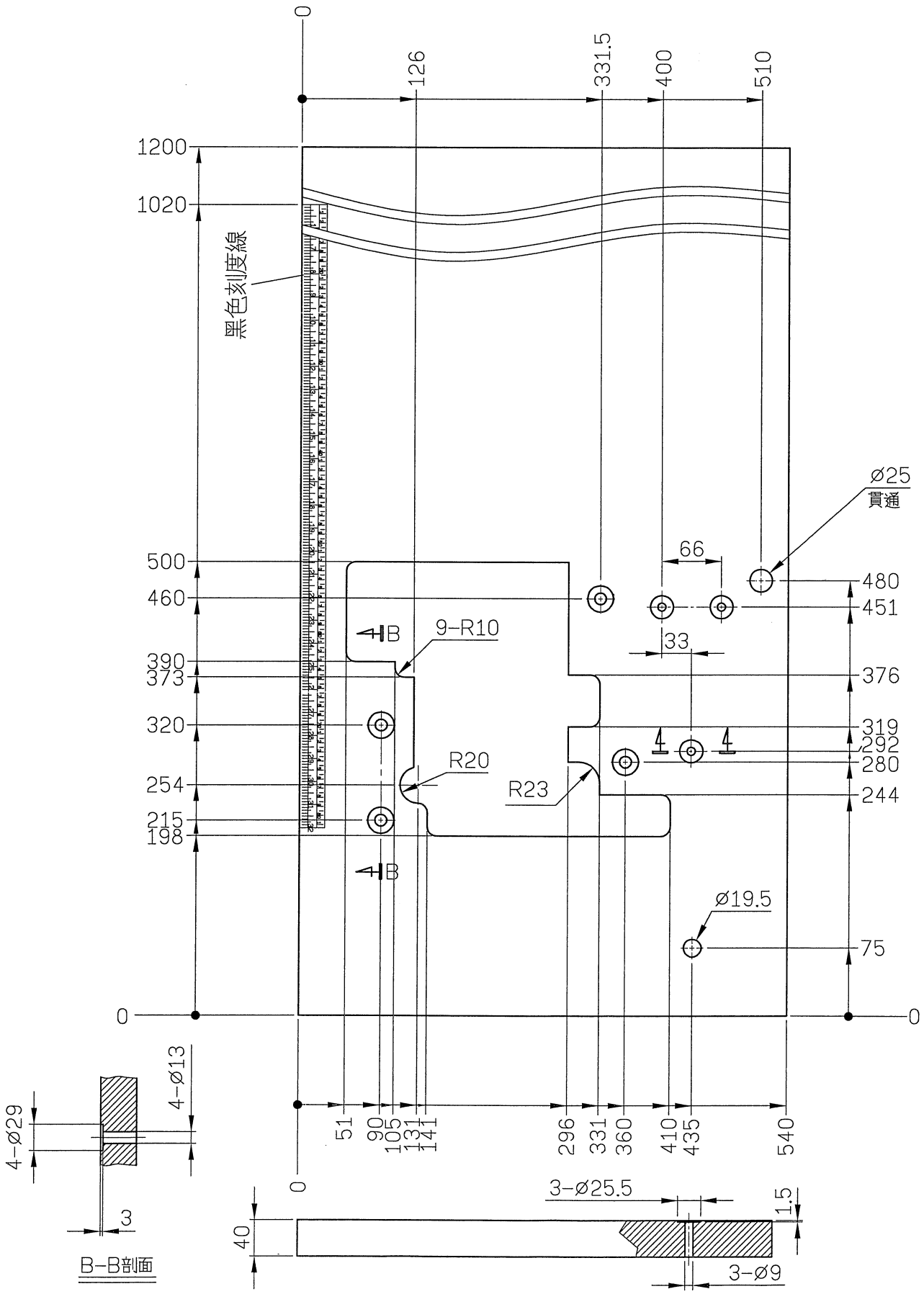

SiRUBA TABLE CUT - OUT	Series	Item Code	Subclass Remark	Mounting
	700KS/T	700KS-T1	UNIT: mm TOLERANCE: ±2 WEIGHT: 11.6 kg ±5%	Semi-submerged
				Date
				2013/09/30

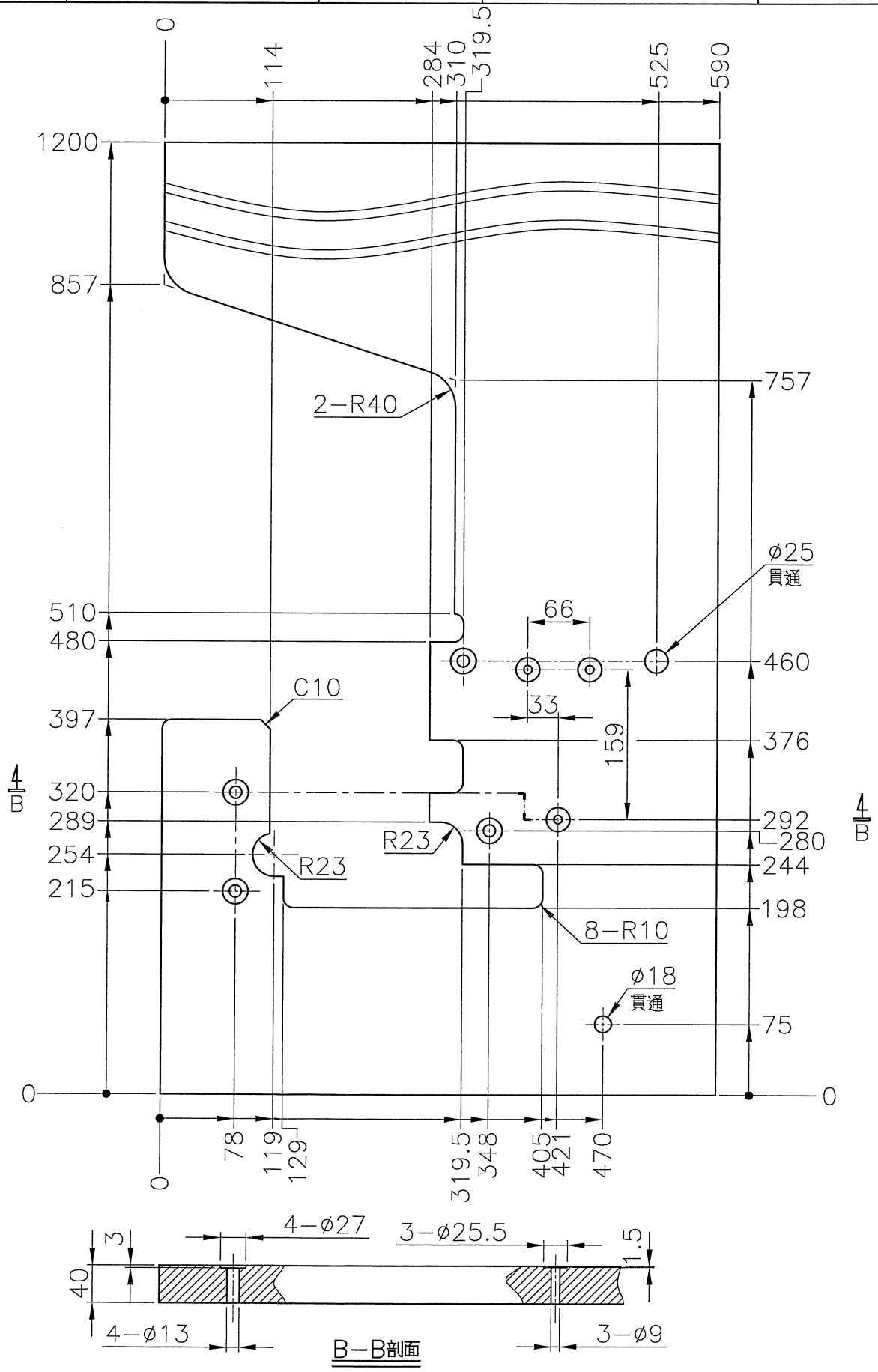

SiRUBA TABLE CUT - OUT	Series	Item Code	Subclass Remark	Mounting
	700KS/T	700KS-T2	UNIT: mm TOLERANCE: ±2 WEIGHT: 11.6 kg ±5%	Semi-submerged installation
				Date
				2014/06/18

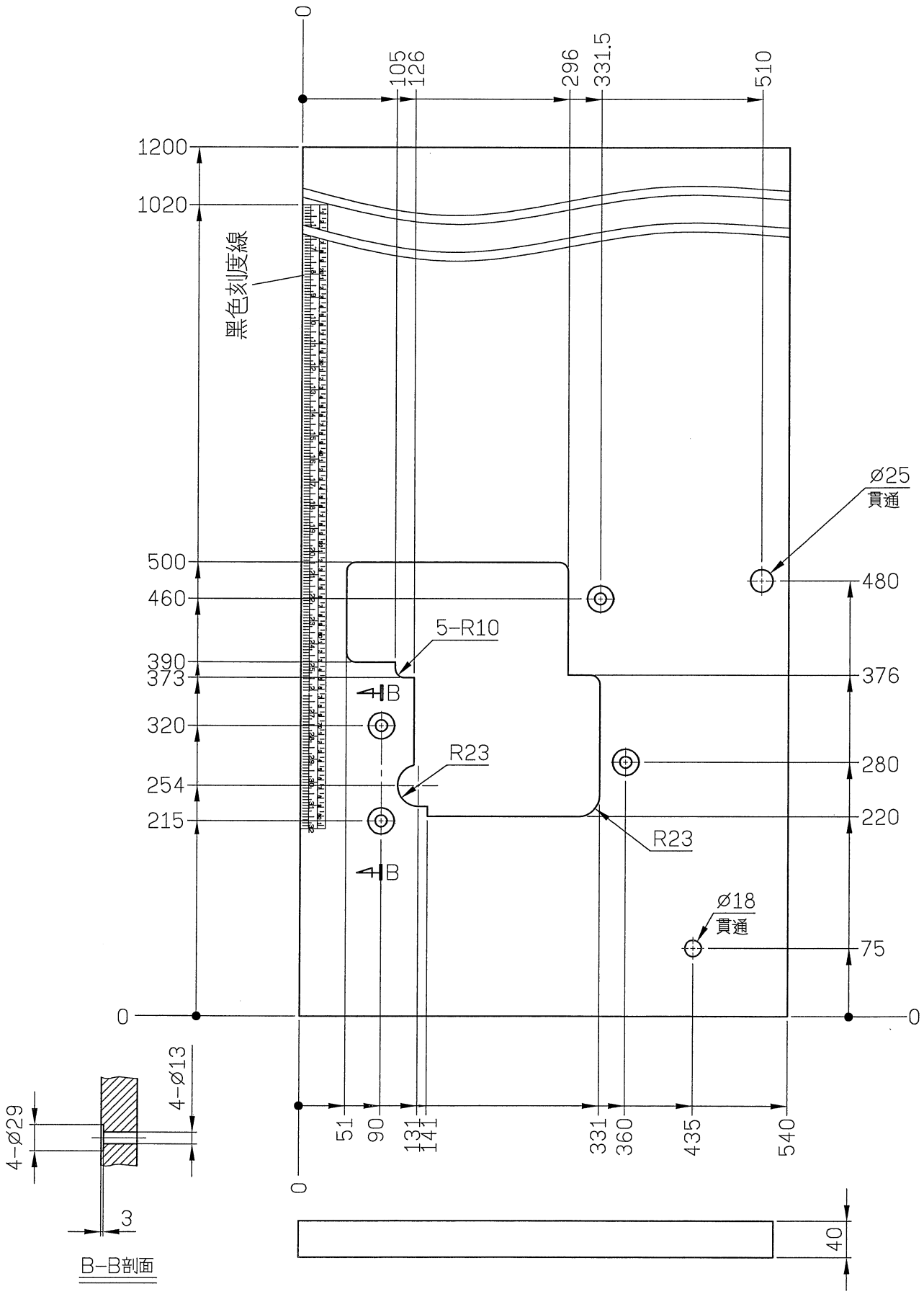

SiRUBA	Series	Item Code	Subclass Remark	Mounting
TABLE CUT - OUT	700KS/T	700KS-T3	UNIT: mm TOLERANCE: ±2 WEIGHT: 11.6 kg ±5%	Semi-submerged installation Date 2014/06/05

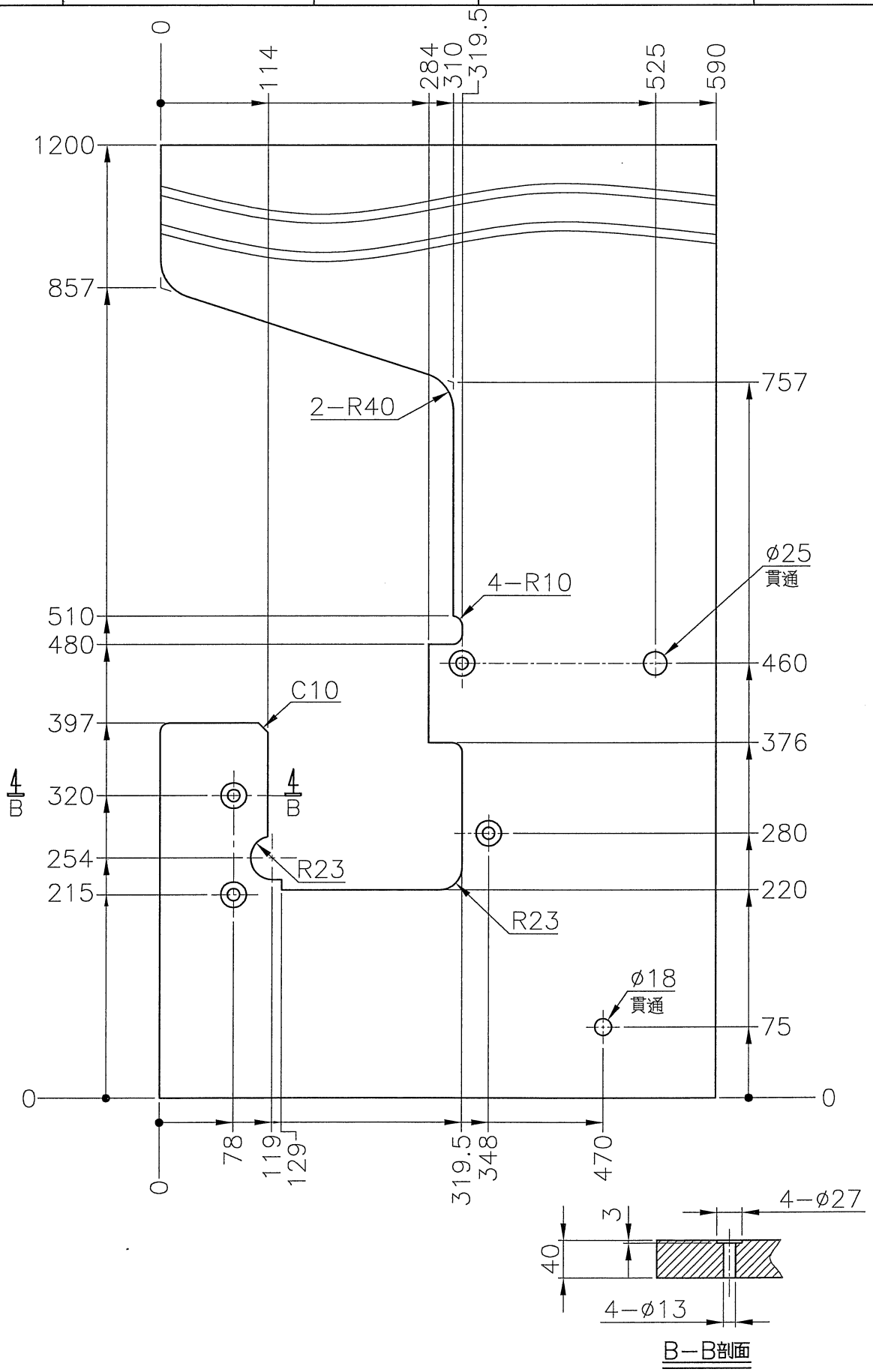

SiRUBA TABLE CUT - OUT	Series	Item Code	Subclass Remark	Mounting
	700KS/T	700KS-T4	UNIT: mm TOLERANCE: ±2 WEIGHT: 11.6 kg ±5%	Semi-submerged installation Date 2016/08/08

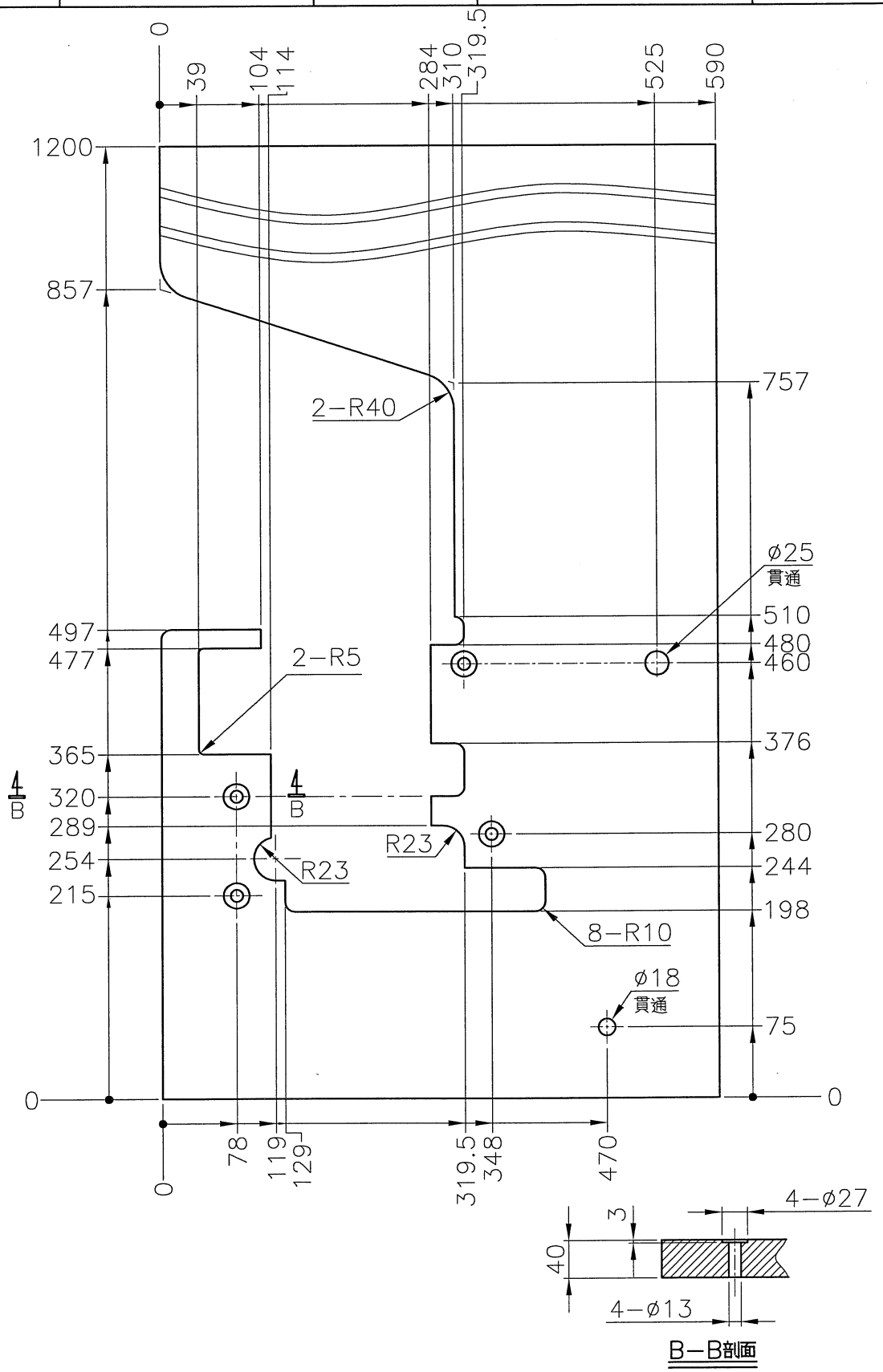
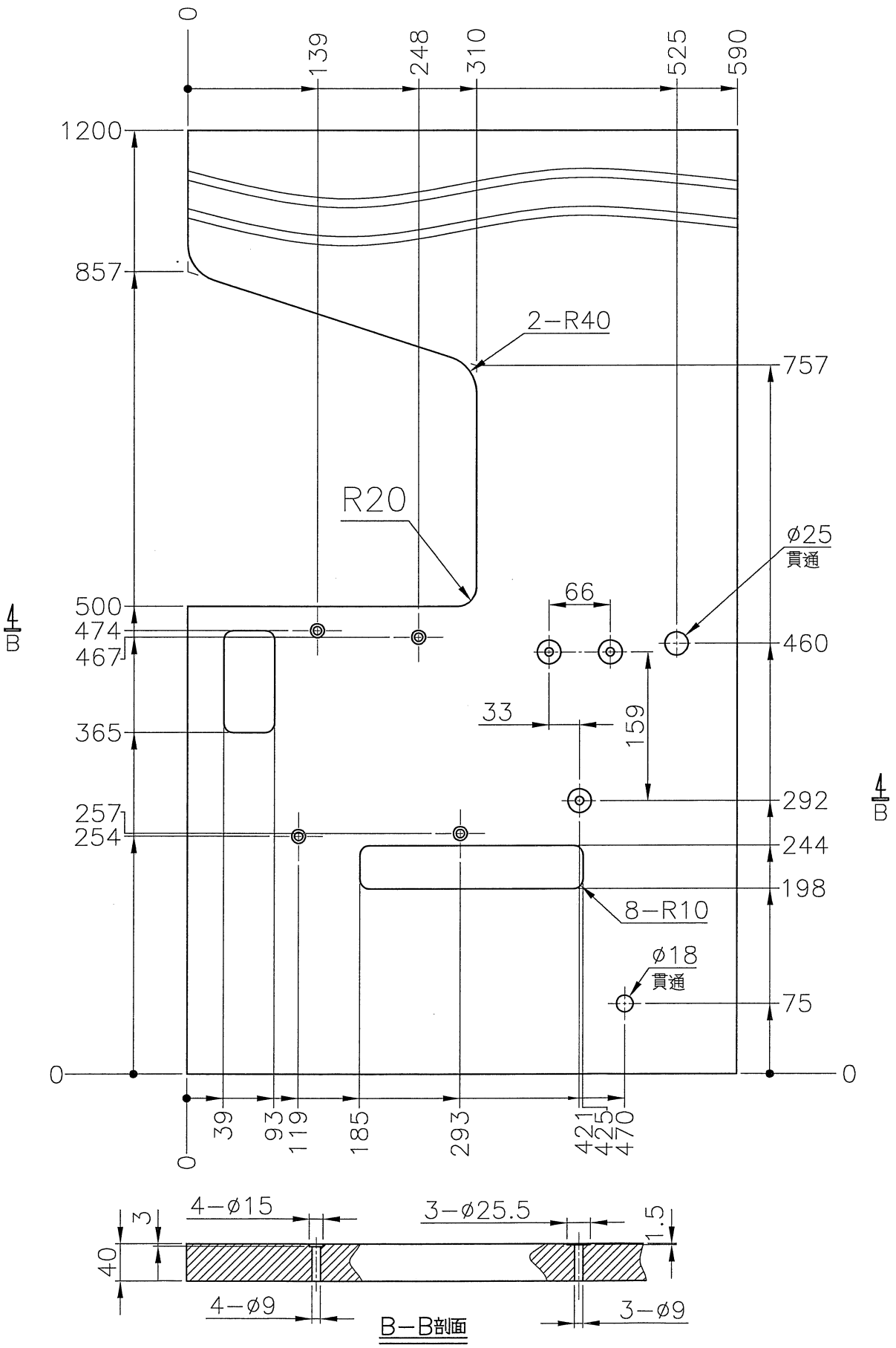
SiRUBA	Series	Item Code	Subclass Remark	Mounting
TABLE CUT - OUT	700KS/T	700KS-T5	UNIT: mm TOLERANCE: ±2 WEIGHT: 11.6 kg ±5% For:LFD M/C 需配SM899-A	Non-submerged Date 2014/10/17