SiRUBA GAGE PARTS LIST	Series	Remark	Page	Date
	700KST		1 / 1	2018/10/12

機型 Model		針板 Needle Plate	送具 Feed Dog		送具 Feed Dog	押具 Presser Foot	上送具 TopFeed Dog	衝程 Crank	大心 Crank Shaft	針鐺 Needle Clamp	勾針連桿座 Upper Looper Holder	上勾針 Upper Looper	下勾針 Lower Looper	針 Needle
737KST	504M-3-03	E503	D515	D516	H515	P552-A	D551	KJ516-E	KD501	KG231K-E	KJ508	LP526	KL502A	DCX27#11
	504M-3-04	E504	D515	D516	H515	P555-A	D551	KJ516-E	KD501	KG231K-E	KJ508	LP526	KL502A	DCX27#11
	504M-3-05	E505	D515	D516	H515	P554-A	D551	KJ516-E	KD501	KG231K-E	KJ508	LP526	KL502A	DCX27#11
	504H-3-03	E513	D515A	D117K	H517	P552-A	D551	KJ513-E	KD501B	KG231K-E	KJ528	LP519	KL502A	DCX27#11
	504H-3-04	E324K	D515A	D117K	H517	P555-A	D551	KJ513-E	KD501B	KG231K-E	KJ528	LP519	KL502A	DCX27#11
	504H-3-05	E515	D515A	D117K	H517	P554-A	D551	KJ513-E	KD501B	KG231K-E	KJ528	LP519	KL502A	DCX27#11
	514M-3-23	E523	D515	D516	H515	P553-A	D551	KJ513-E	KD501	KG242K-E	KJ508	LP518	KL502	DCX27#11*2
747KST	514M-3-24	E424	D515	D516	H515	P550-A	D551	KJ513-E	KD501	KG242K-E	KJ508	LP518	KL502	DCX27#11*2
	514M-3-24/VT	E424	D515	D516	H515	P550-A	D551	KJ513-E	KD501	KG242K-E	KJ508	LP518	KL502	DCX27#11*2
	514M-3-24/VT/RSK	E424	D515	D516	H515	P550-A	D551	KJ513-E	KD501	KG242K-E	KJ508	LP518	KL502	DCX27#11*2
	514M-3-25	E525	D515	D516	H515	P551-A	D551	KJ513-E	KD501	KG242K-E	KJ508	LP518	KL502	DCX27#11*2
	514H-3-23	E533	D515A	D117K	H517	P553-A	D551	KJ513-E	KD501B	KG242K-E	KJ528	LP519	KL502A	DCX27#11*2
	514H-3-24	E434K	D515A	D117K	H517	P550-A	D551	KJ513-E	KD501B	KG242K-E	KJ528	LP519	KL502A	DCX27#11*2
	514H-3-25	E535	D515A	D117K	H517	P551-A	D551	KJ513-E	KD501B	KG242K-E	KJ528	LP519	KL502A	DCX27#11*2

SIRUBA PARTS LIST	Series	Parts Group	Subclass / Remark	Page
	700KST	KA		1/1
				Date
				2026/04/30

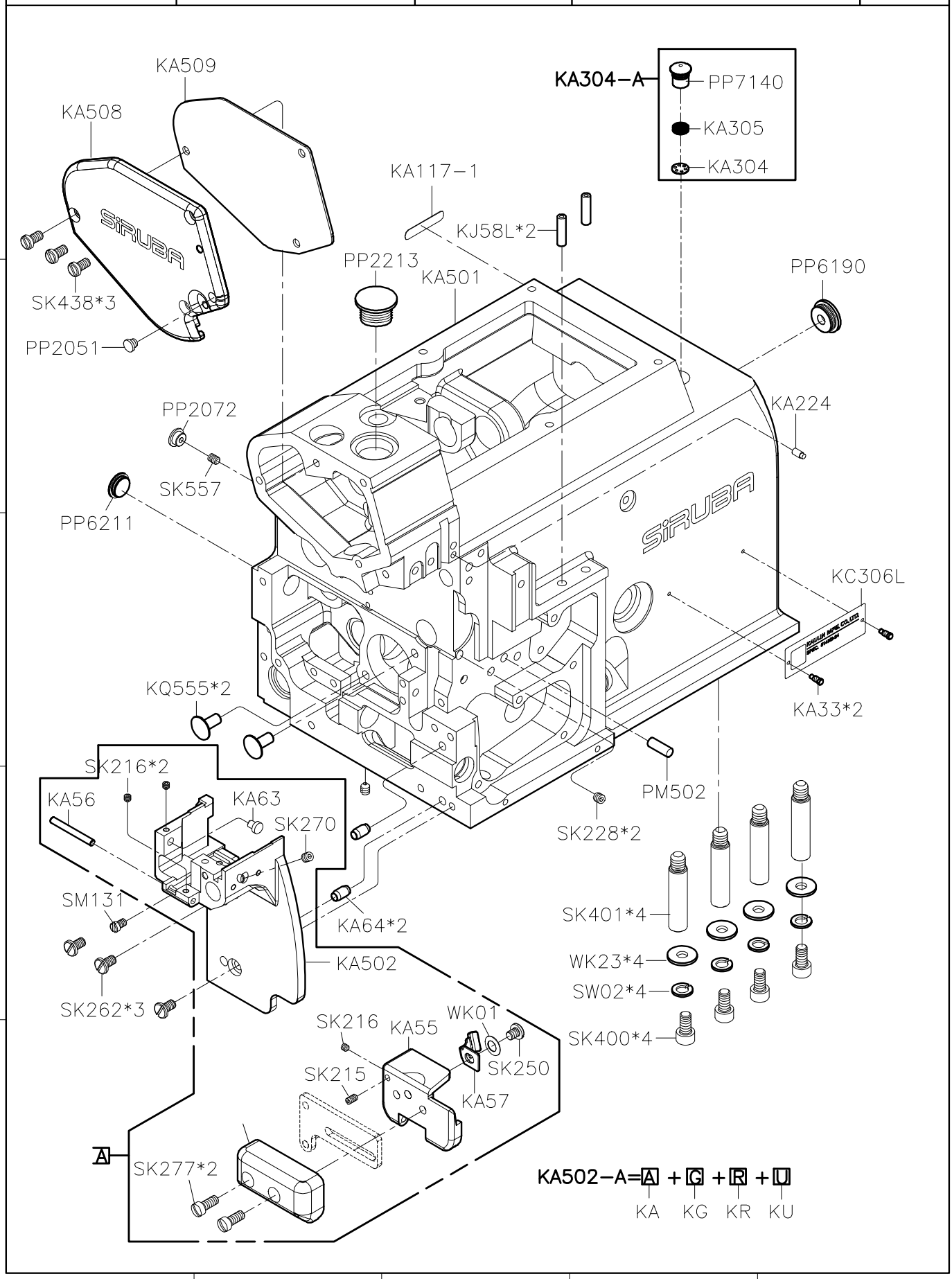

SIRUBA PARTS LIST	Series	Parts Group	Subclass / Remark	Page
	700KST	KB		1/1
				Date
				2018/07/05

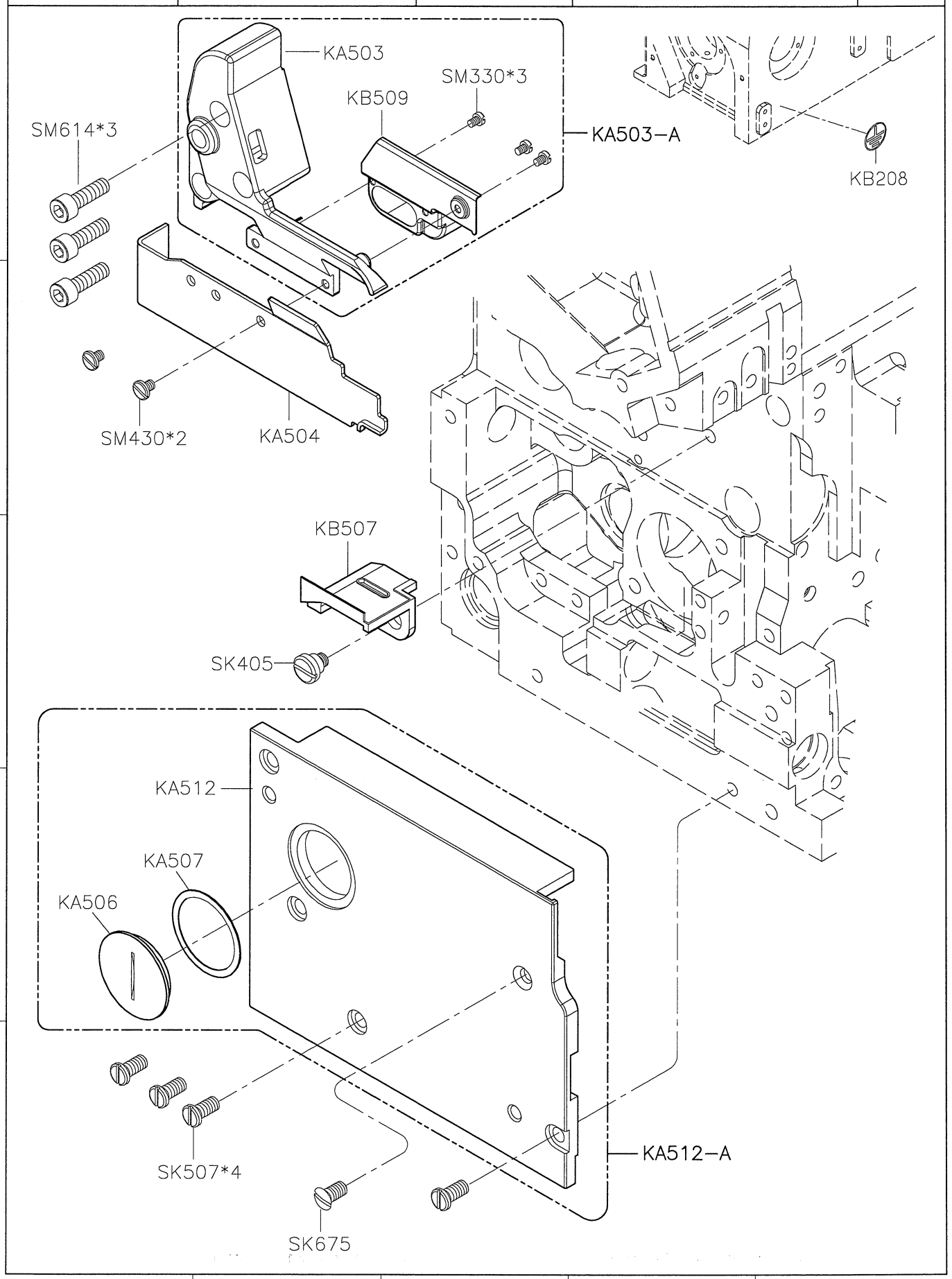

SIRUBA PARTS LIST	Series	Parts Group	Subclass / Remark	Page
	700KST	KC		1/1
				Date
				2022/12/01

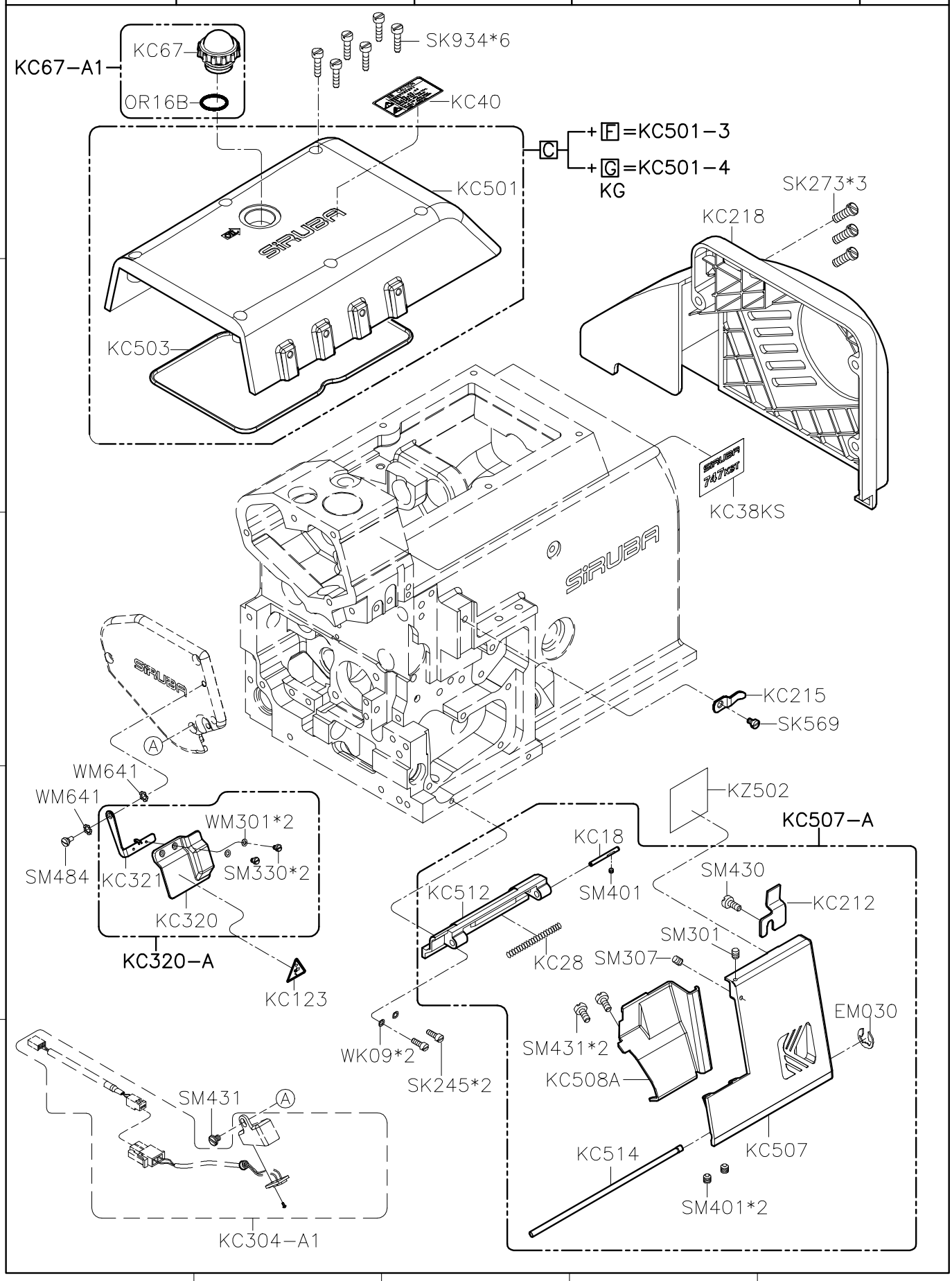

SIRUBA PARTS LIST	Series	Parts Group	Subclass / Remark	Page
	700KST	KD		1/1
				Date
				2017/2/14

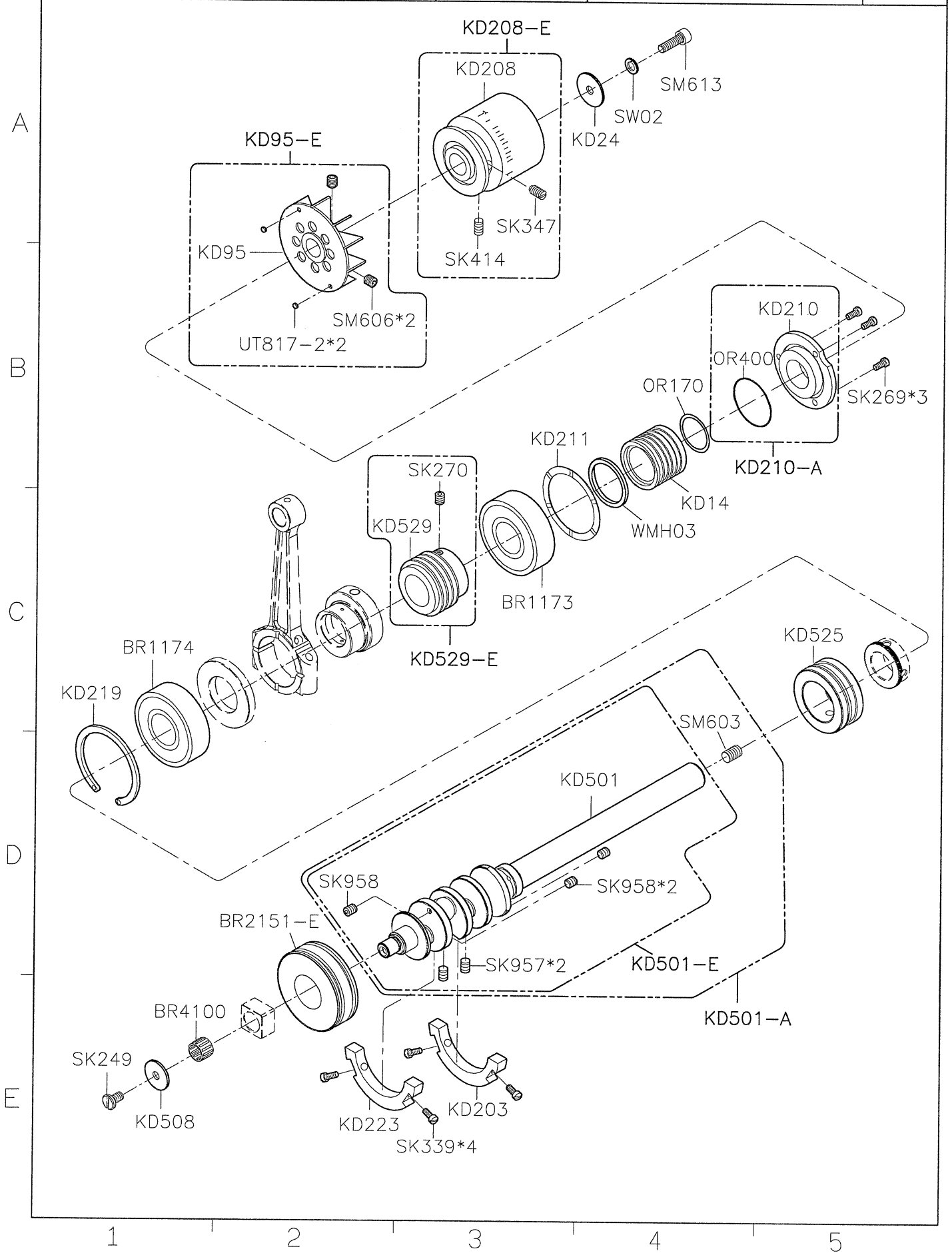

SIRUBA PARTS LIST	Series	Parts Group	Subclass / Remark	Page
	700KST	KF		1/1
				Date
				2025/06/24

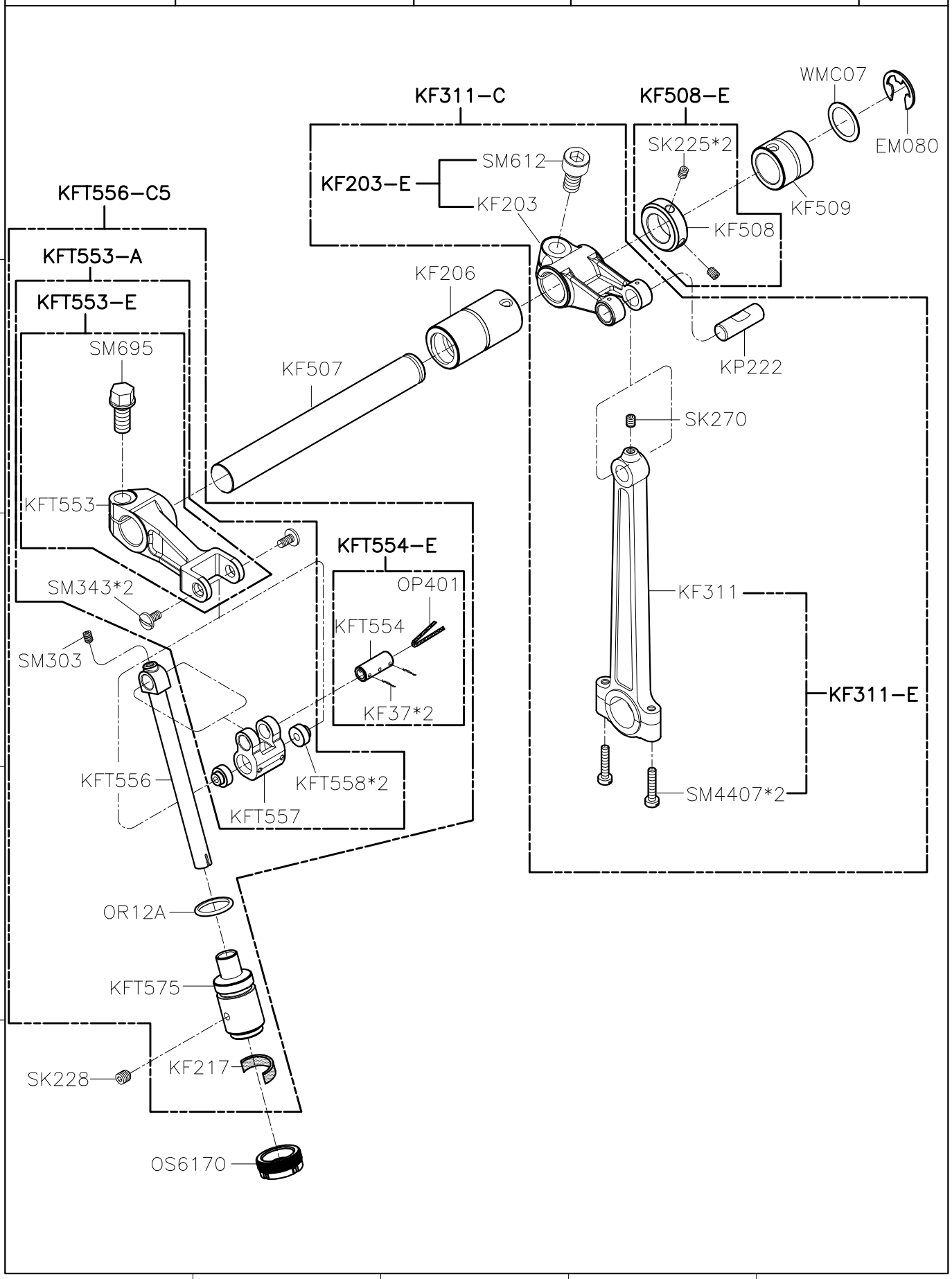

SIRUBA PARTS LIST	Series	Parts Group	Subclass / Remark	Page
	700KST	KG		1/1
				Date
				2019/04/19

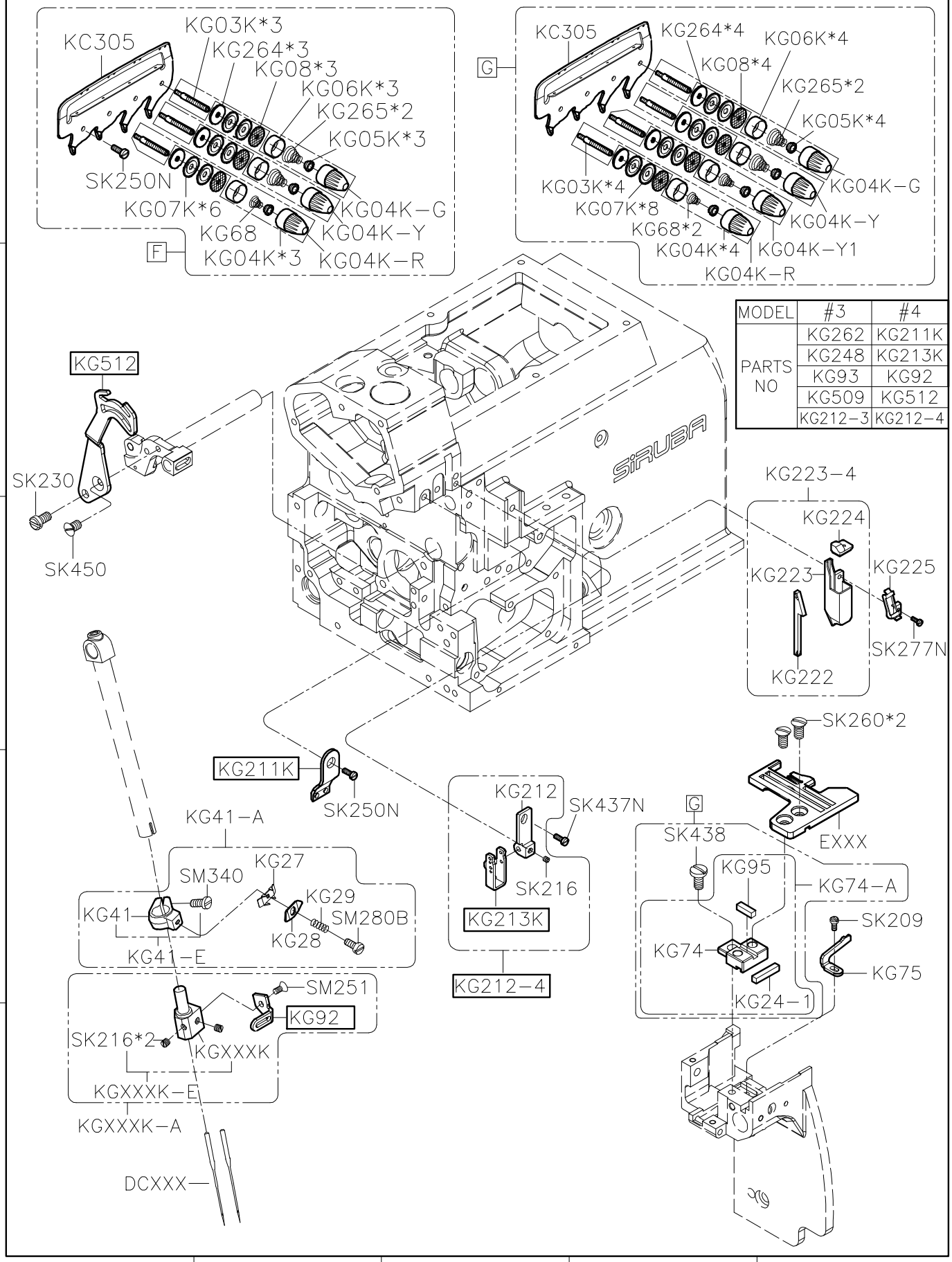

MODEL	#3	#4
PARTS NO	KG262	KG211K
	KG248	KG213K
	KG93	KG92
	KG509	KG512
	KG212-3	KG212-4

SIRUBA PARTS LIST	Series	Parts Group	Subclass / Remark	Page
	700KST	KJ		1/1
				Date
				2016/12/28

MODEL	#3	#4
PARTS NO	KJ516	KJ513
	KJ516-E	KJ513-E
	KJ516-C	KJ513-C

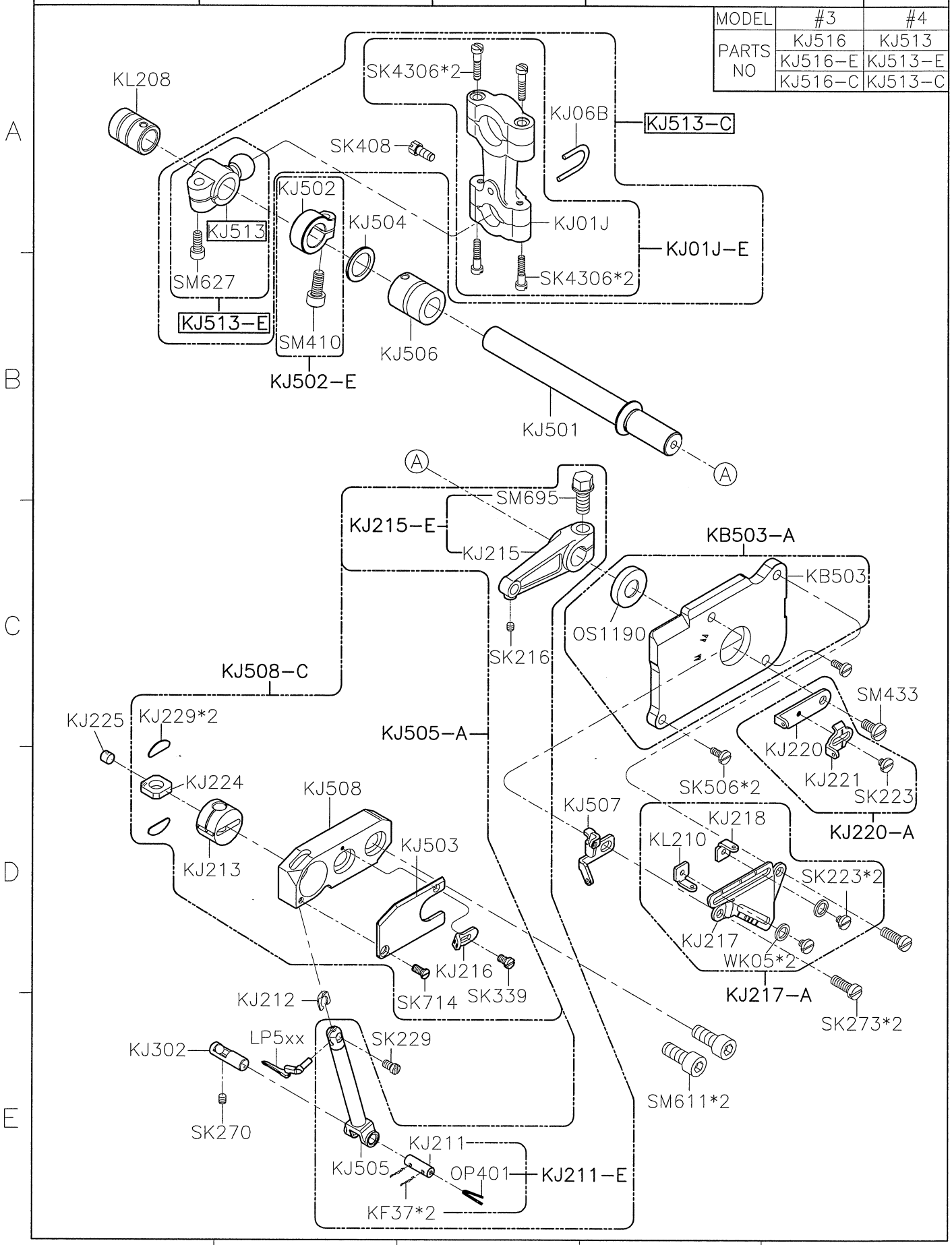

SIRUBA PARTS LIST	Series	Parts Group	Subclass / Remark	Page
	700KST	KL		1/1
				Date
				2019/01/24

MODEL	#3	#4
PARTS NO	KL502A	KL502
	KL514-A1	KL514-A

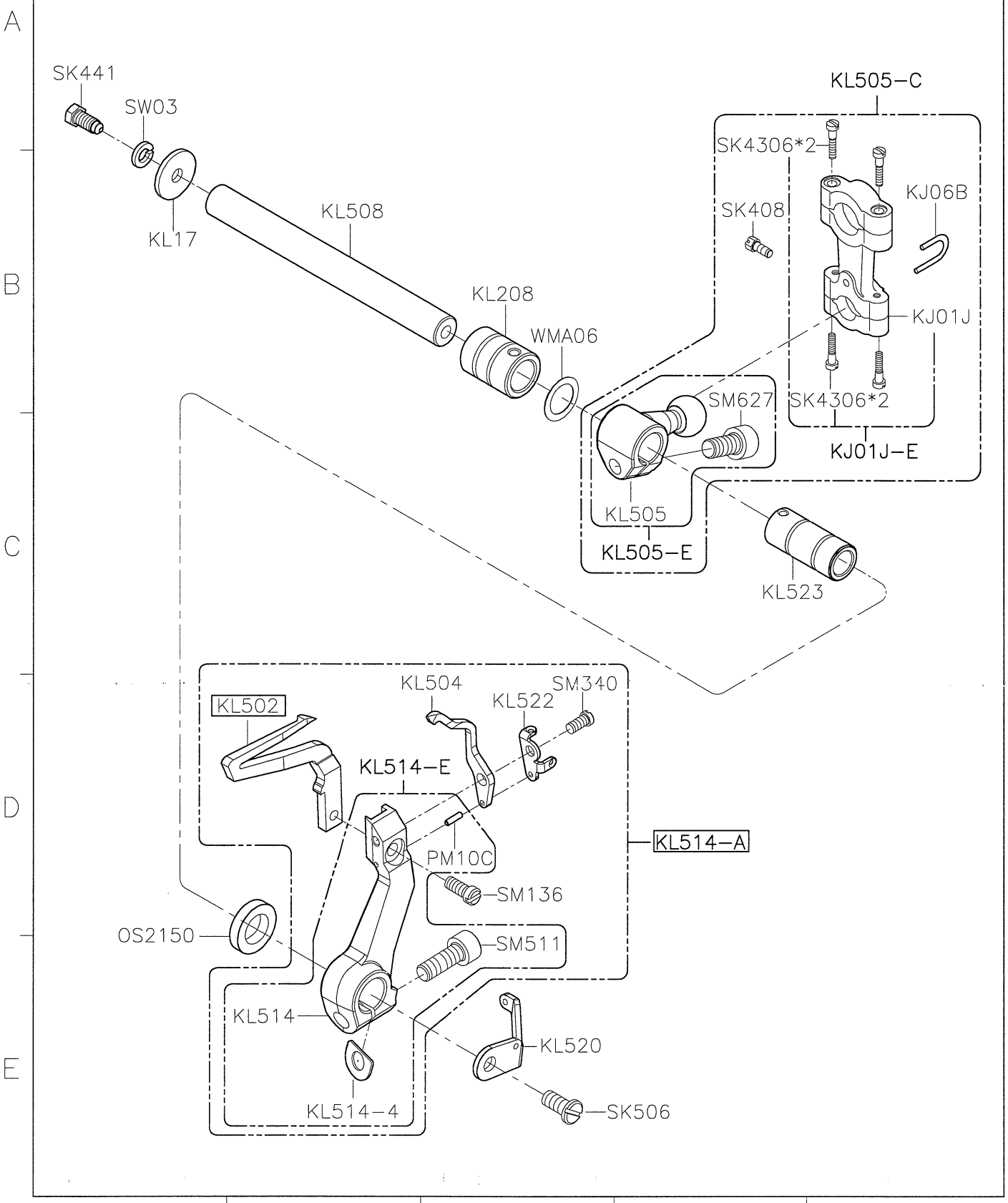

SIRUBA PARTS LIST	Series	Parts Group	Subclass / Remark	Page
	700KST	KP		1/1
				Date
				2017/2/2

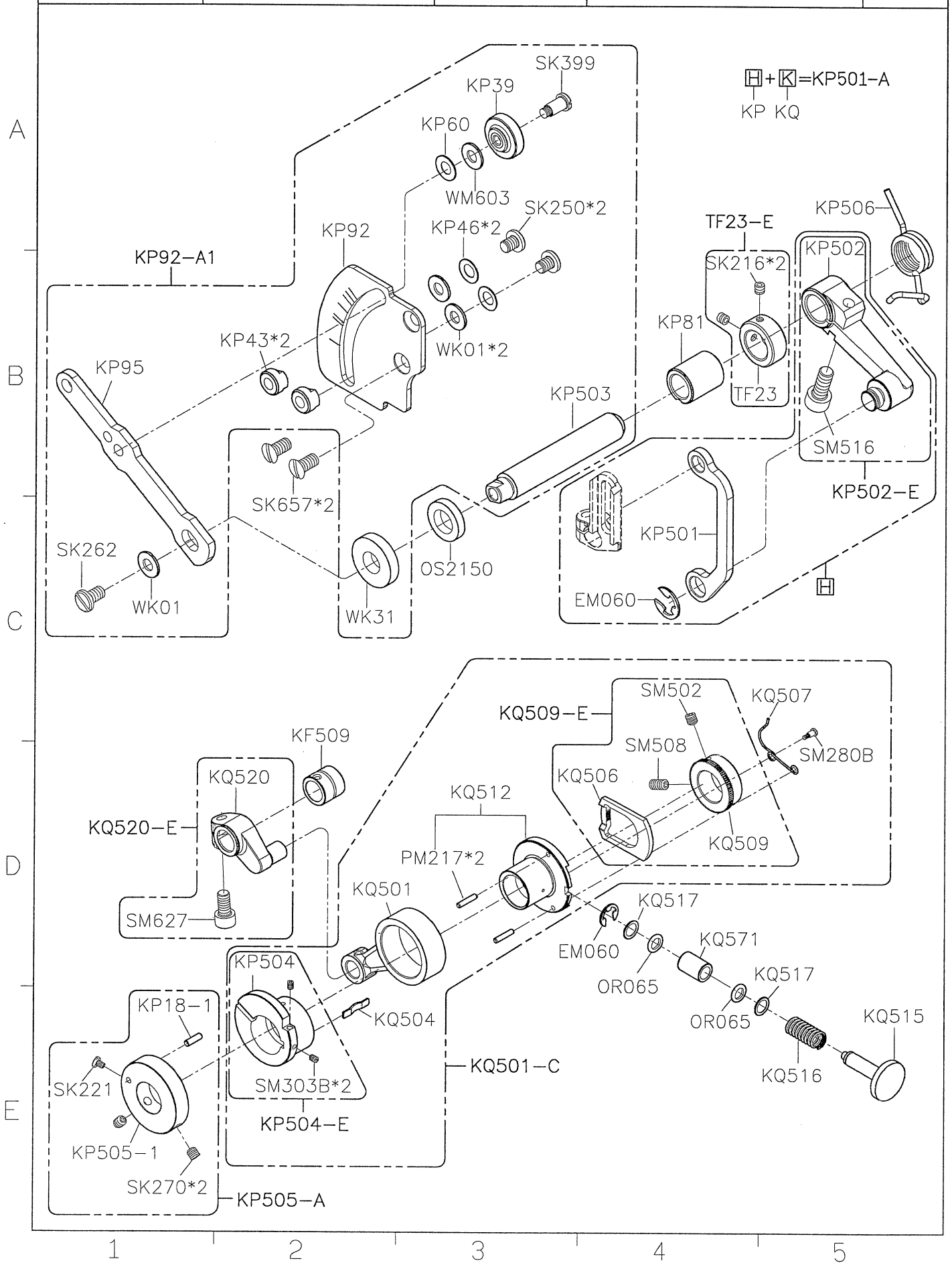

SIRUBA PARTS LIST	Series	Parts Group	Subclass / Remark	Page
	700KST	KQ		1/1
				Date
				2018/8/2

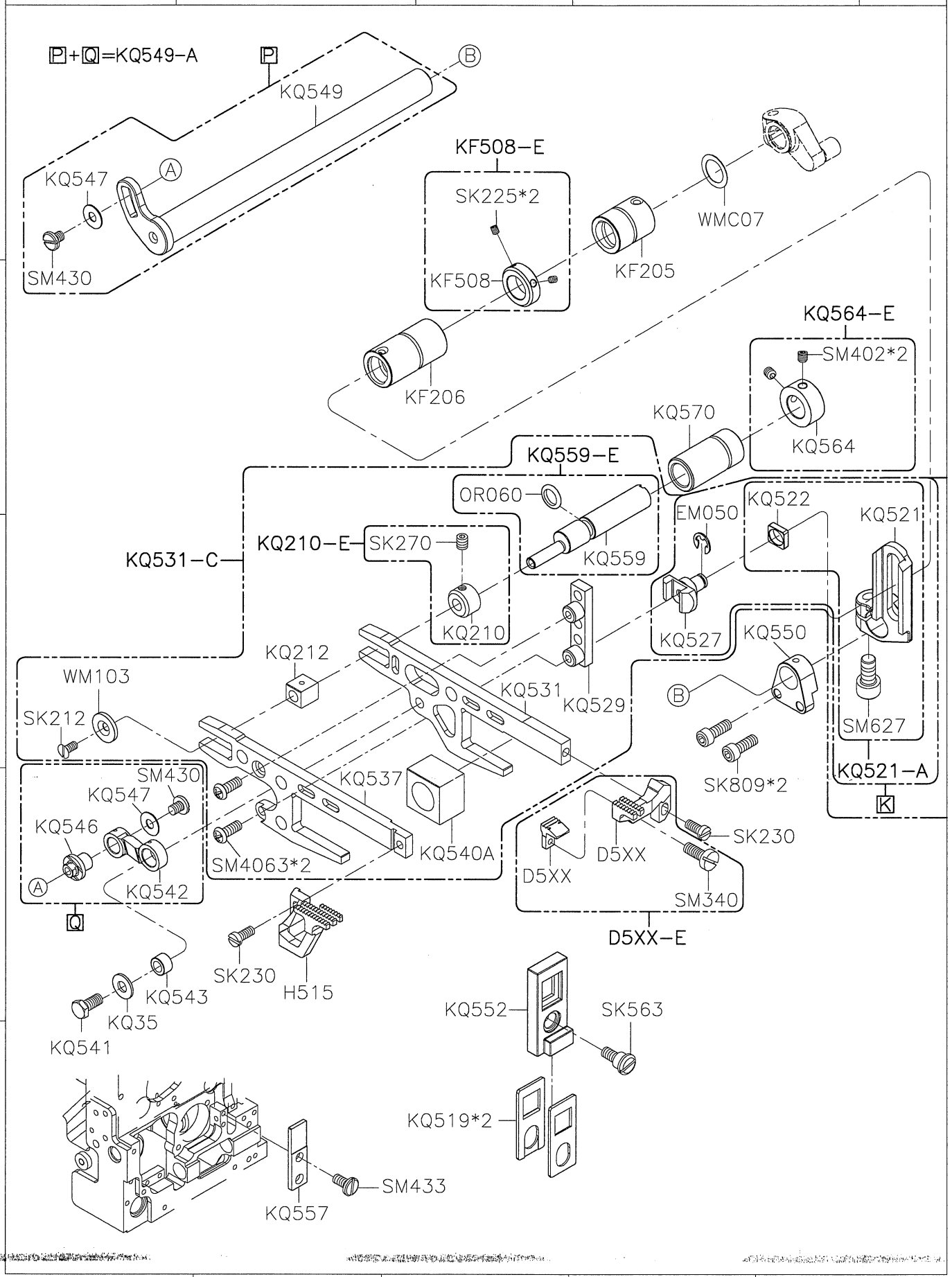

SiRUBA PARTS LIST	Series	Parts Group	Subclass / Remark	Page
	700KST	KQ	*FOR 4K90KST用	1/2
				Date
				2023/07/06

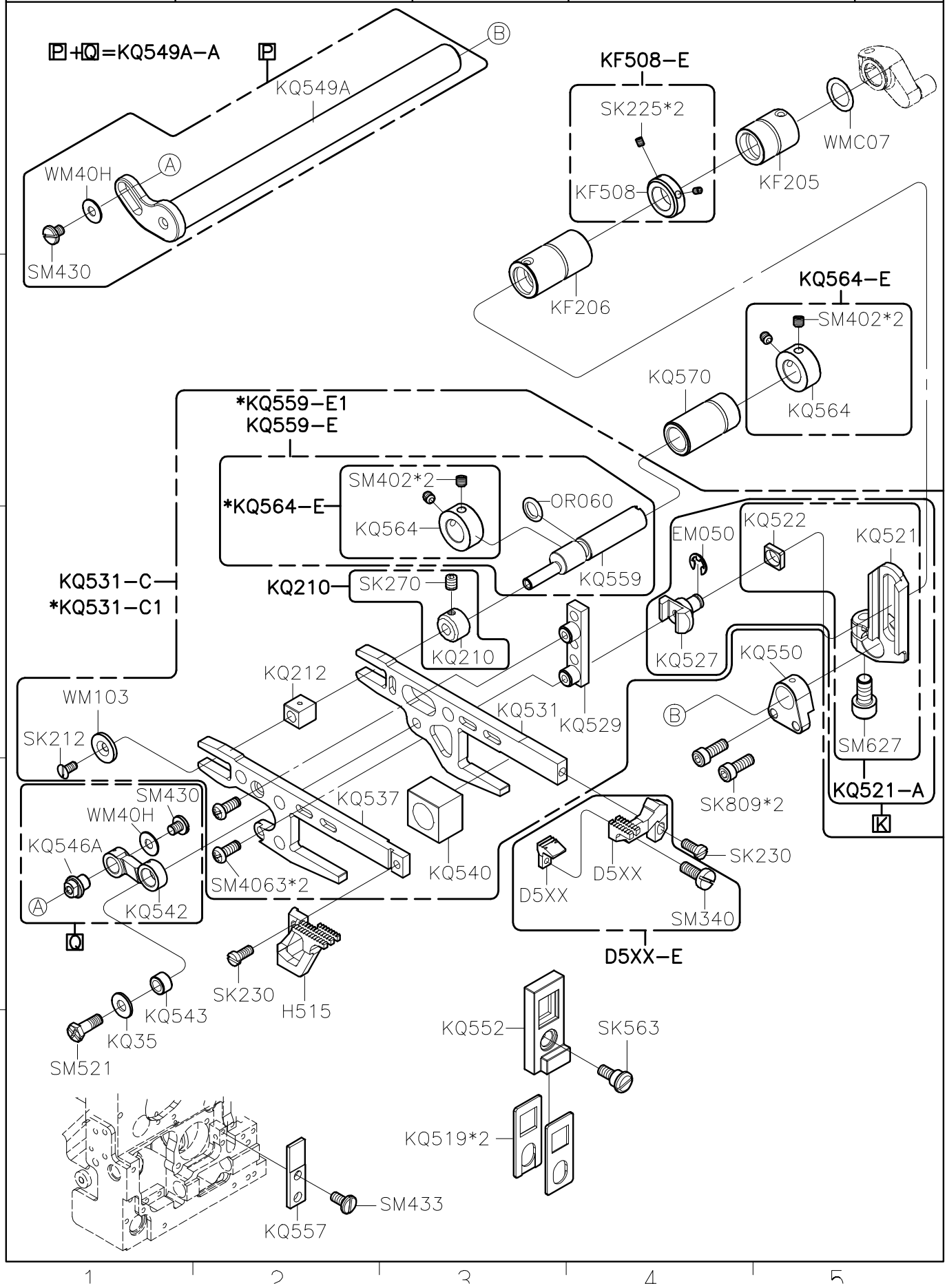

SiRUBA PARTS LIST	Series	Parts Group	Subclass / Remark	Page
	700KST	KR		1/1
				Date
				2017/9/27

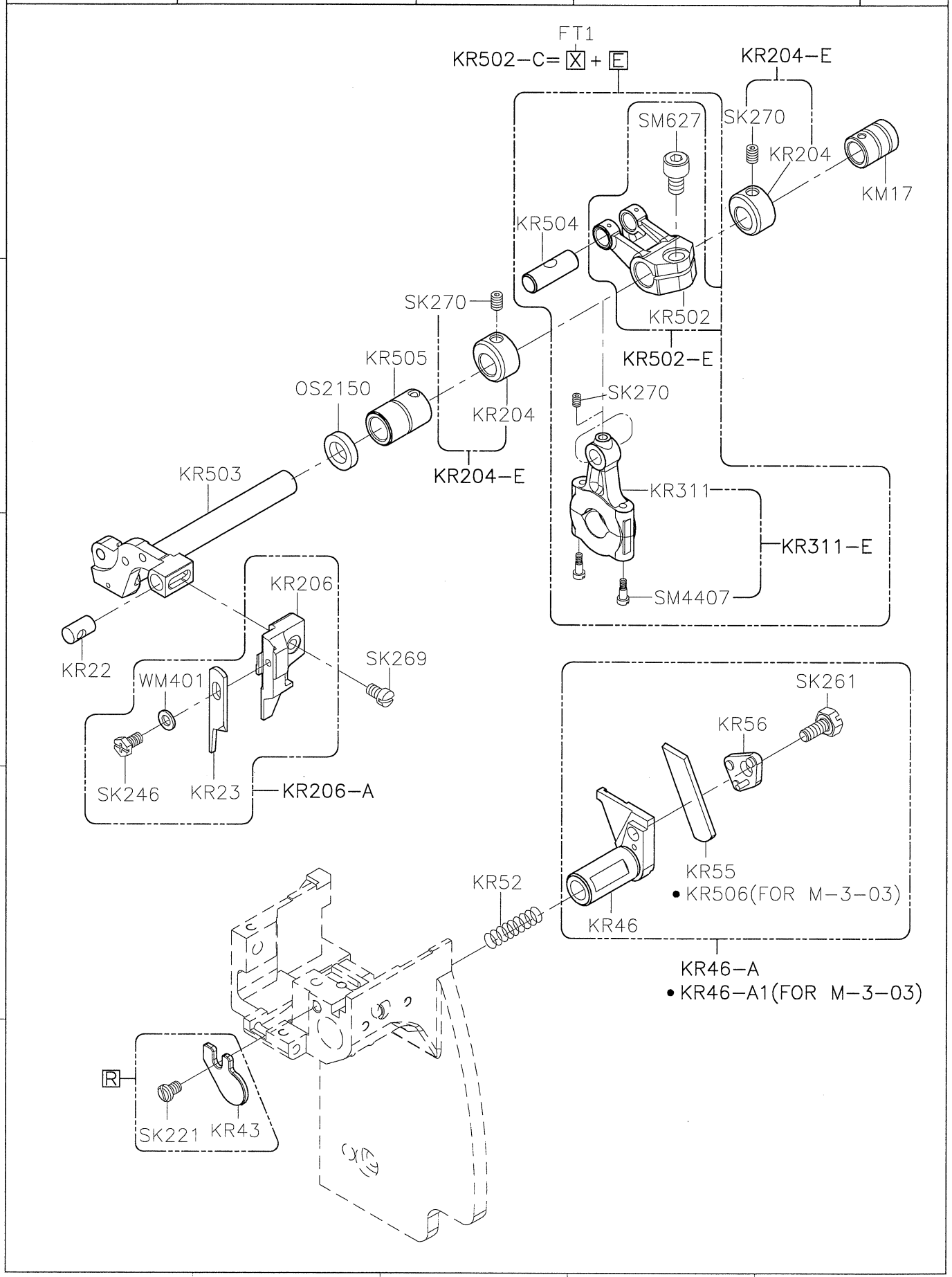

SIRUBA PARTS LIST	Series	Parts Group	Subclass / Remark	Page
	700KST	KS		1/1
				Date
				2024/05/15

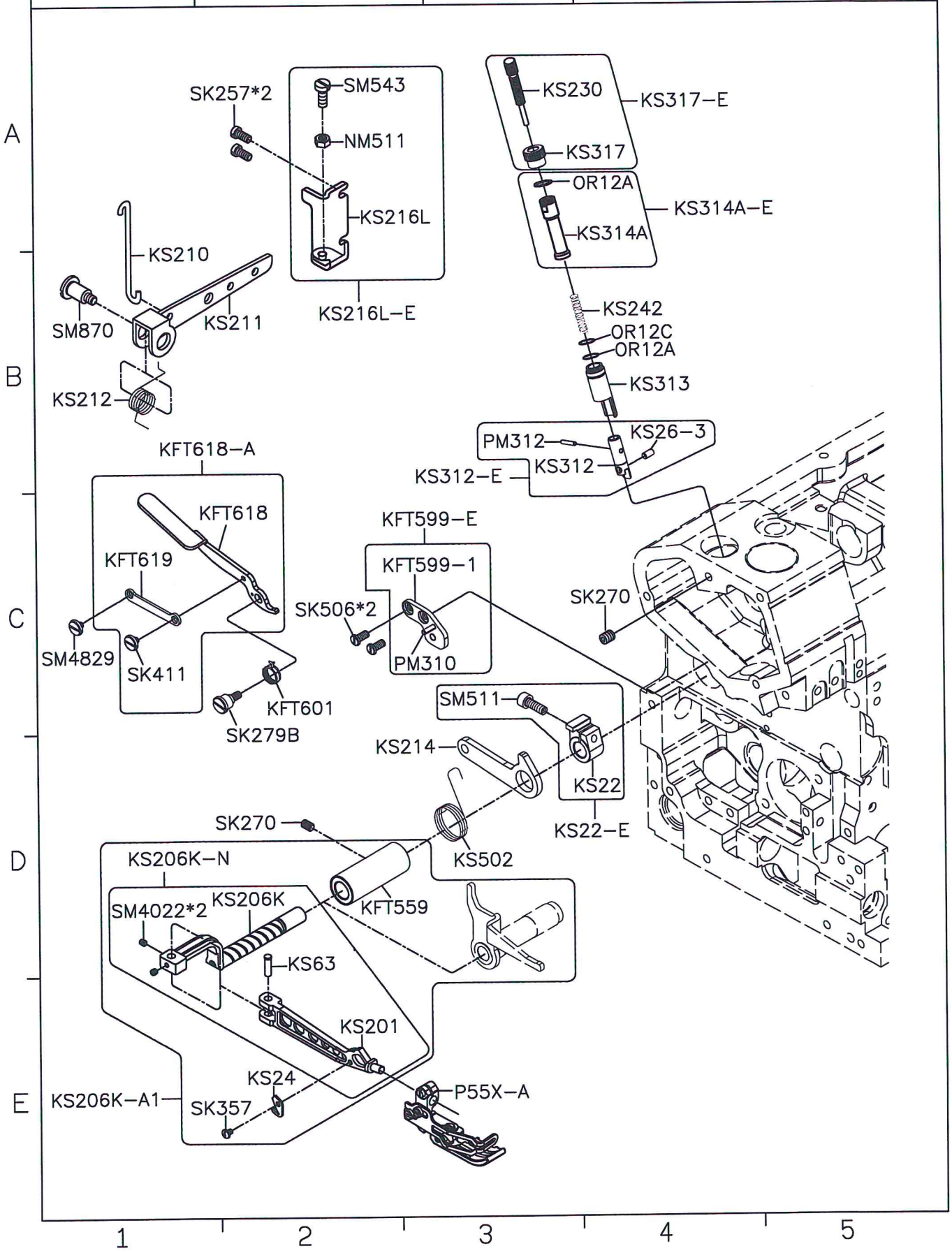

SiRUBA PARTS LIST	Series	Parts Group	Subclass / Remark	Page
	700KST	KT		1/1
				Date
				2026/05/04

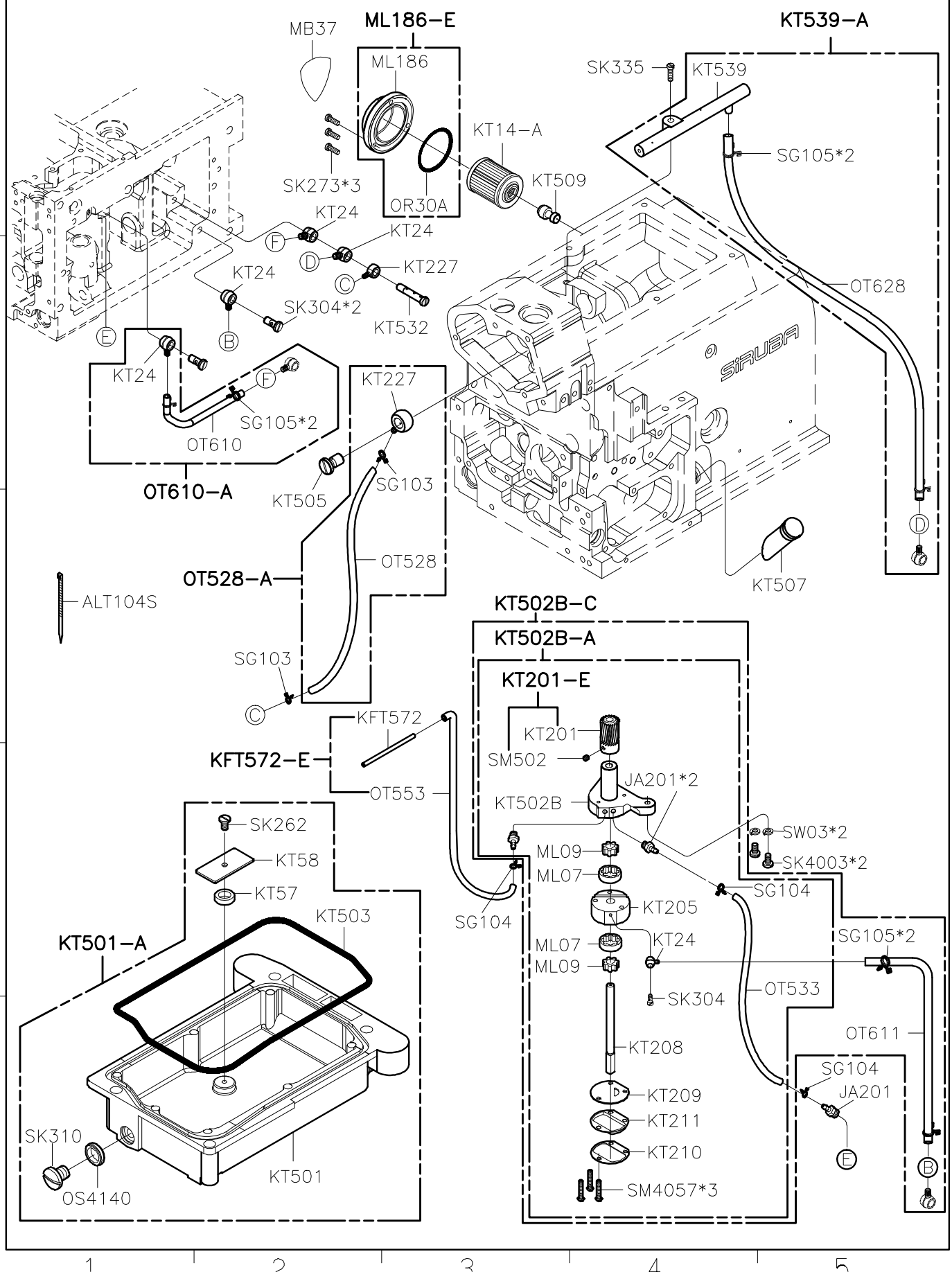

SiRUBA PARTS LIST	Series	Parts Group	Subclass / Remark	Page
	700KS/T	KU		1/1
				Date
				2013/10/09

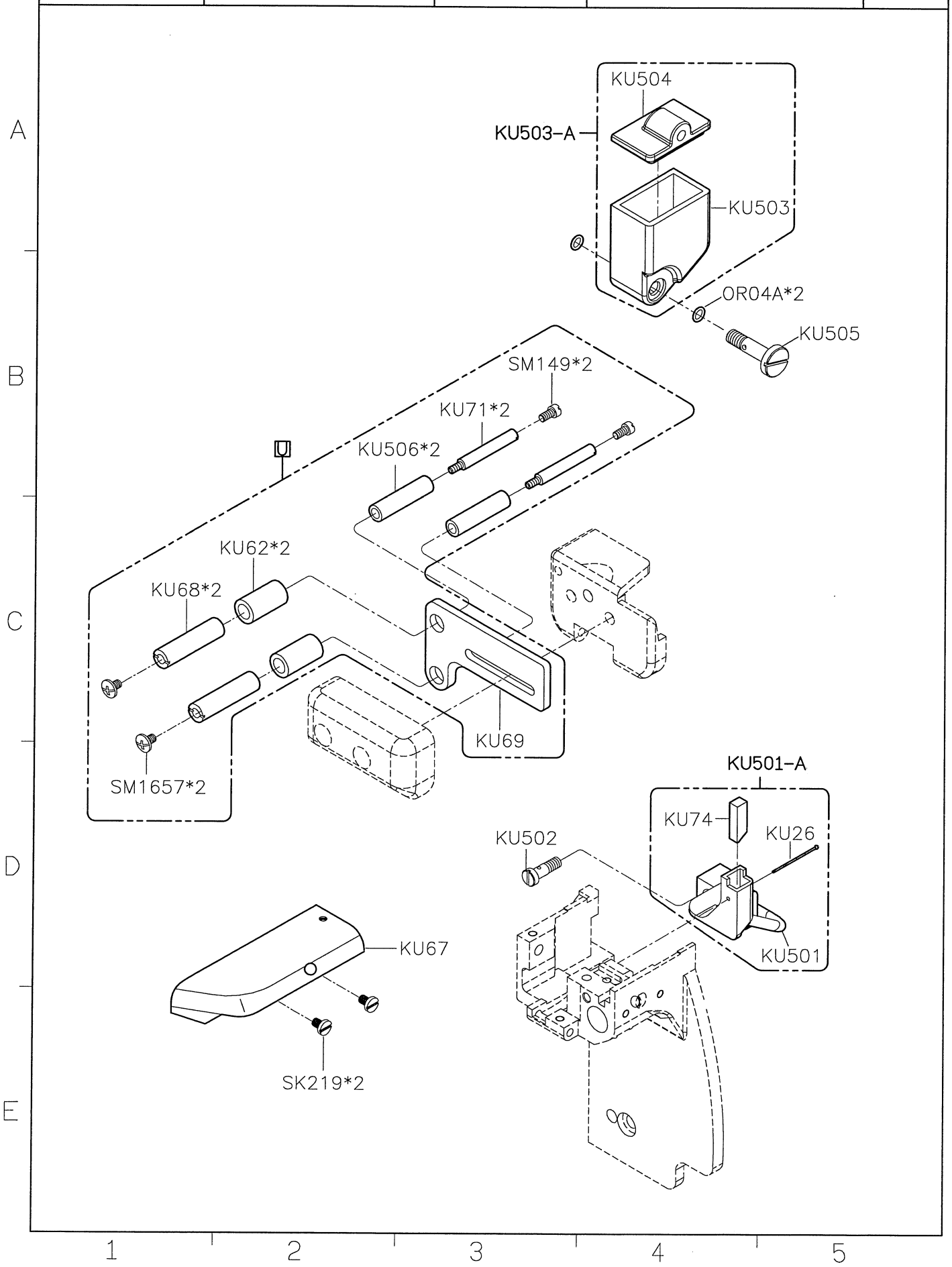

SIRUBA PARTS LIST	Series	Parts Group	Subclass / Remark	Page
	拷克 Overlock 含MO6800系列	KW		1/4
				Date 2022/07/11

KW40E-3

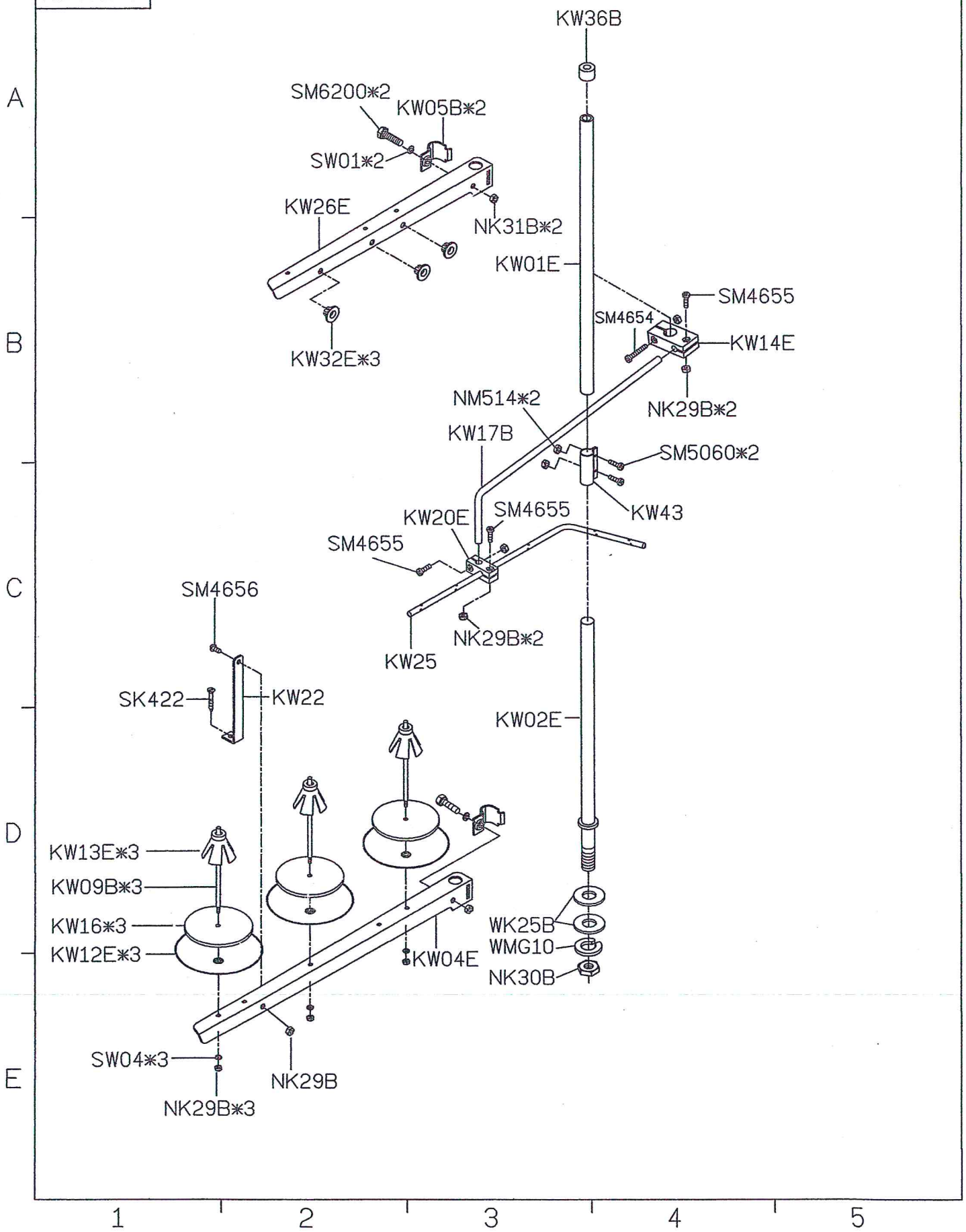

SiRUBA PARTS LIST	Series	Parts Group	Subclass / Remark	Page
	拷克 Overlock 含MO6800系列	KW		2/4
				Date
				2022/07/11

KW40E-4

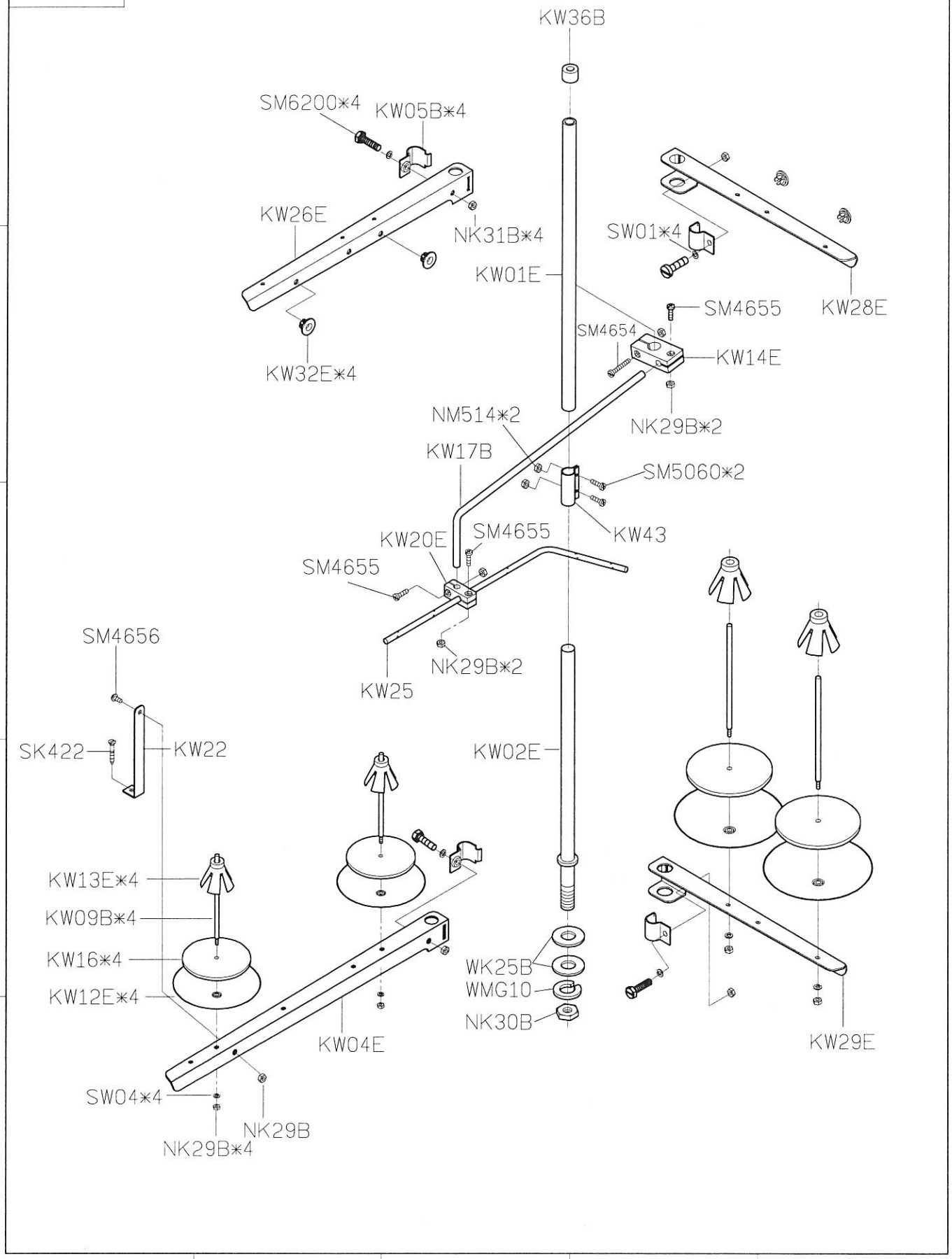

SIRUBA PARTS LIST	Series	Parts Group	Subclass / Remark	Page
	拷克 Overlock 含MO6800系列	KW		3/4
				Date 2022/07/11

KW40E-5

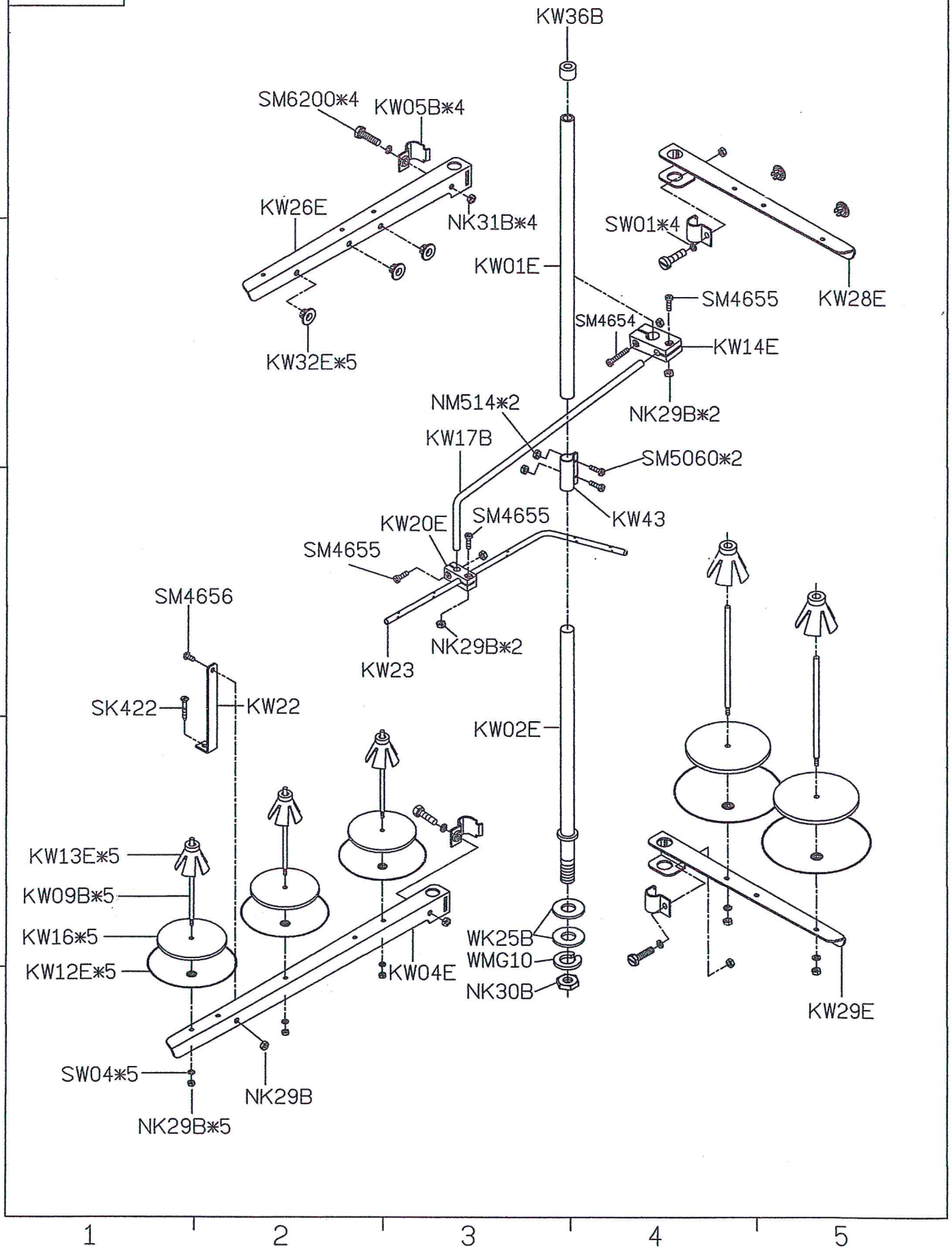

SiRUBA PARTS LIST	Series	Parts Group	Subclass / Remark	Page
	拷克 Overlock 含MO6800系列	KW		4/4
				Date 2022/07/11

KW40E-6

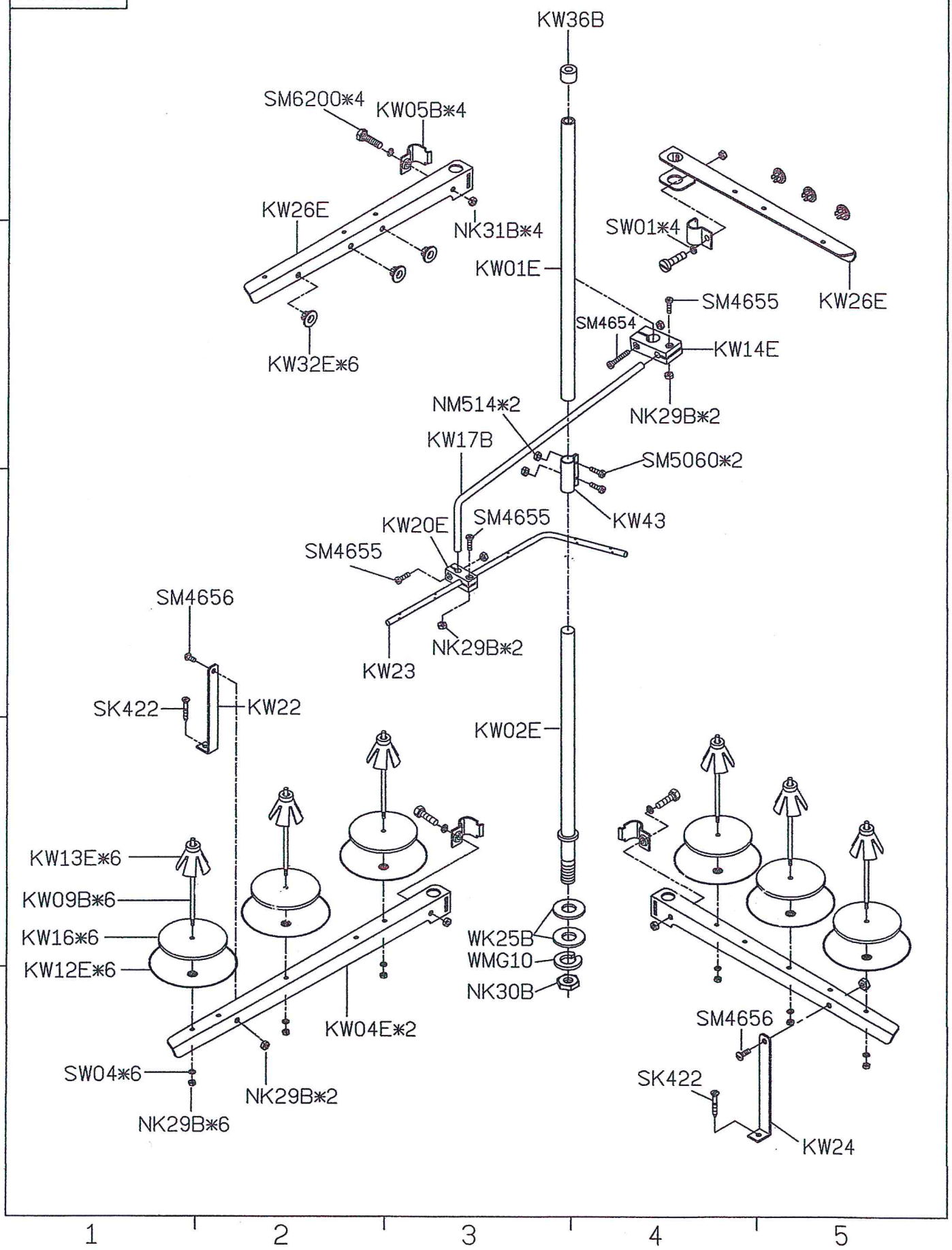

SIRUBA PARTS LIST	Series	Parts Group	Subclass / Remark	Page
	700KS/T	KX		1/1
				Date
				2014/03/05

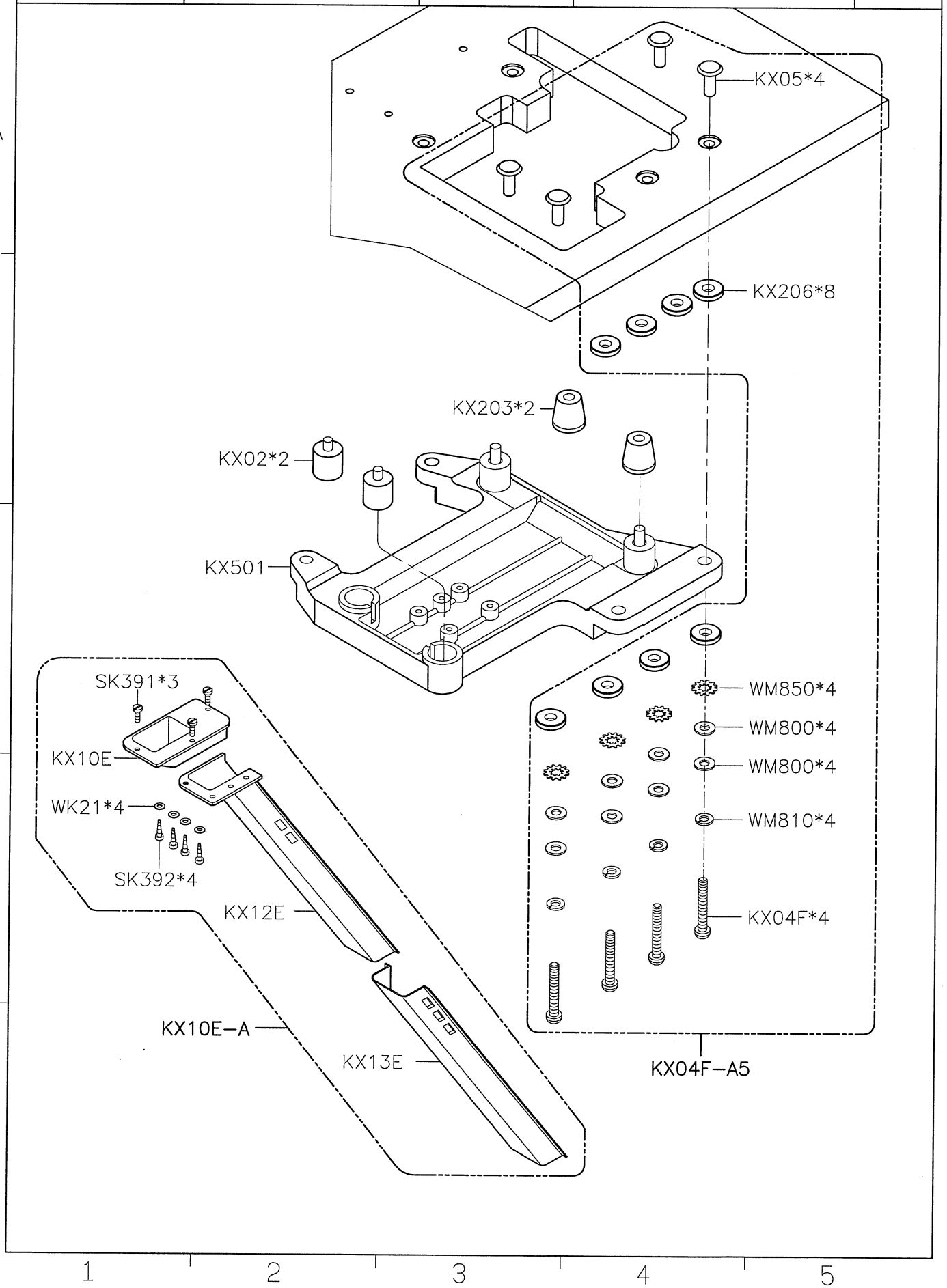

SiRUBA PARTS LIST	Series	Parts Group	Subclass / Remark	Page
	700KST	KY		1/1
				Date
				2025/06/09

KY01－1
防塵罩

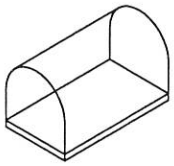

KY02F－A
油罐

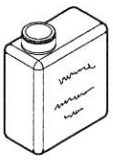

KY03
油壺

KY04
漏斗

SK216
螺絲

KY14
內六角螺絲起子

LY33
一字起子

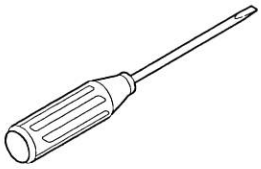

KY18
鑷子

KY30
針板紙

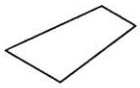

KY201
工具袋

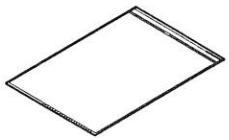

KR55
下刀片

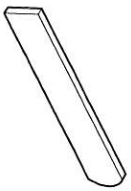

KT14－A
濾油器

KZ03
乾燥濟

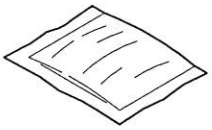

針*4
車針

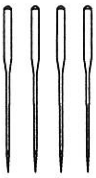

LY35
一字起子

KY21－A
鉤子／鍊條

A B C D E

1 2 3 4 5

SiRUBA PARTS LIST	Series	Parts Group	Subclass / Remark	Page
	700KST	KZ		1/1
				Date
				2013/10/09

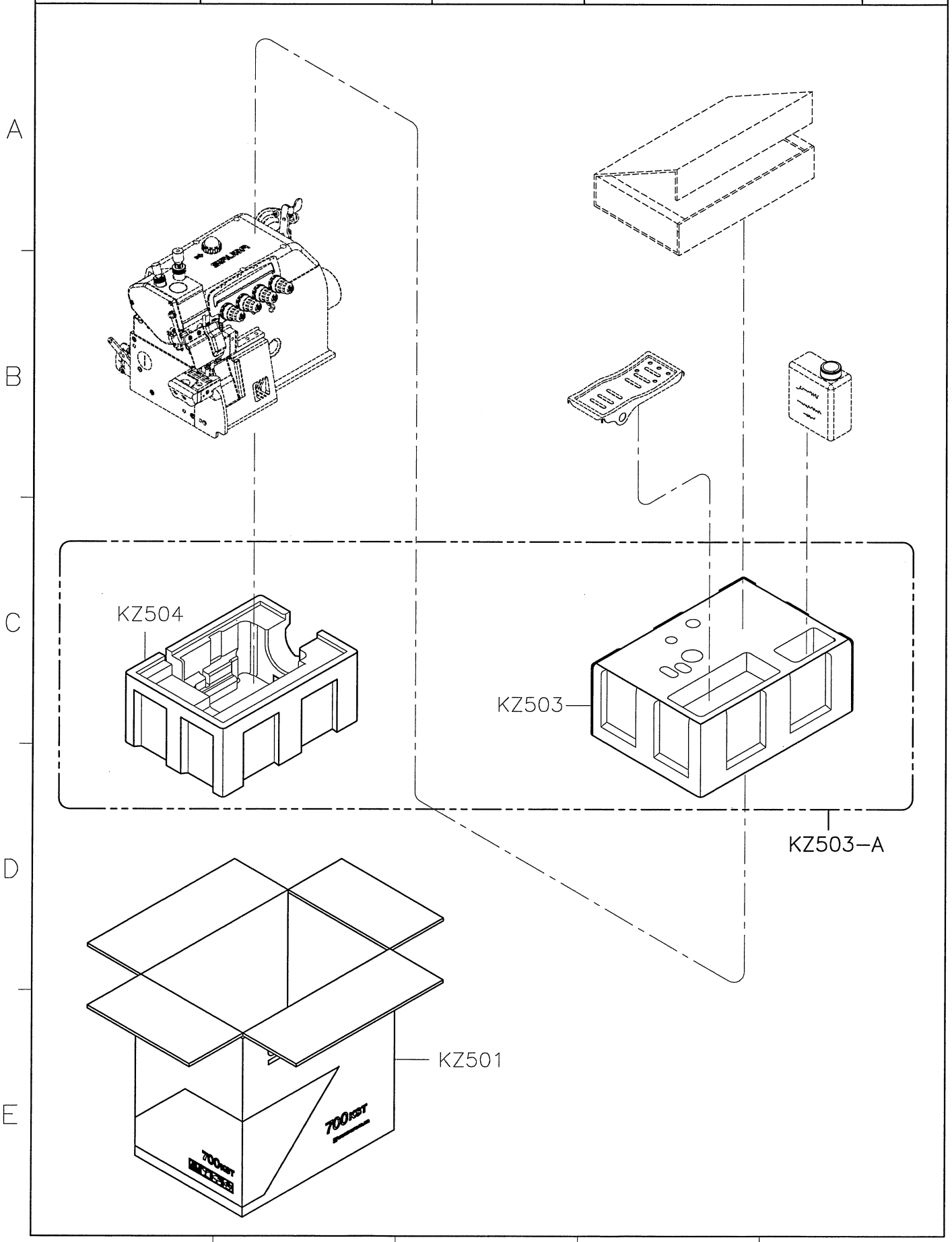

SIRUBA PARTS LIST	Series	Parts Group	Subclass / Remark	Page
	700KST	FT		1/4
				Date
				2015/07/21

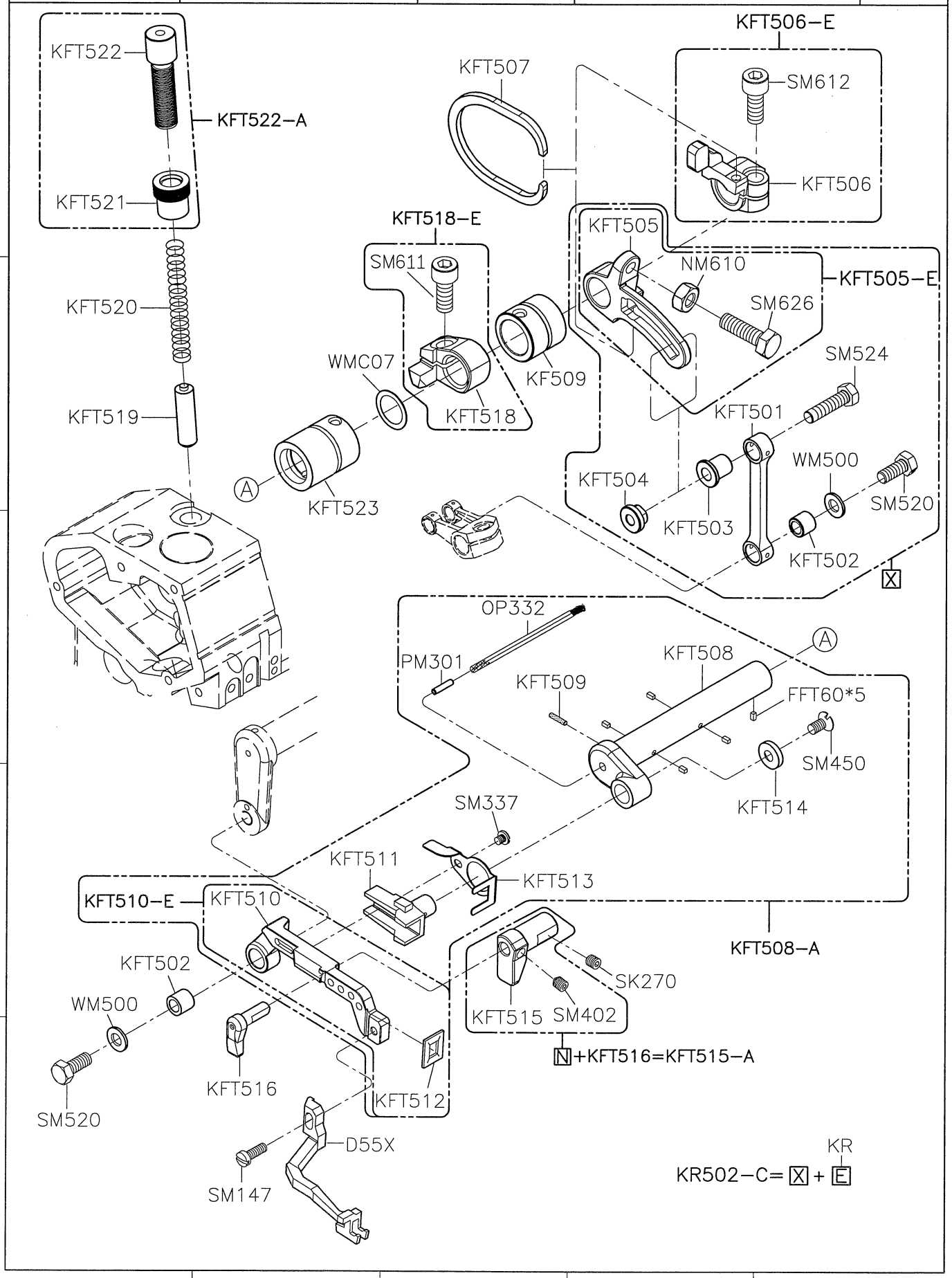

SiRUBA PARTS LIST	Series	Parts Group	Subclass / Remark	Page
	700KST	FT		2/4
				Date
				2014/10/22

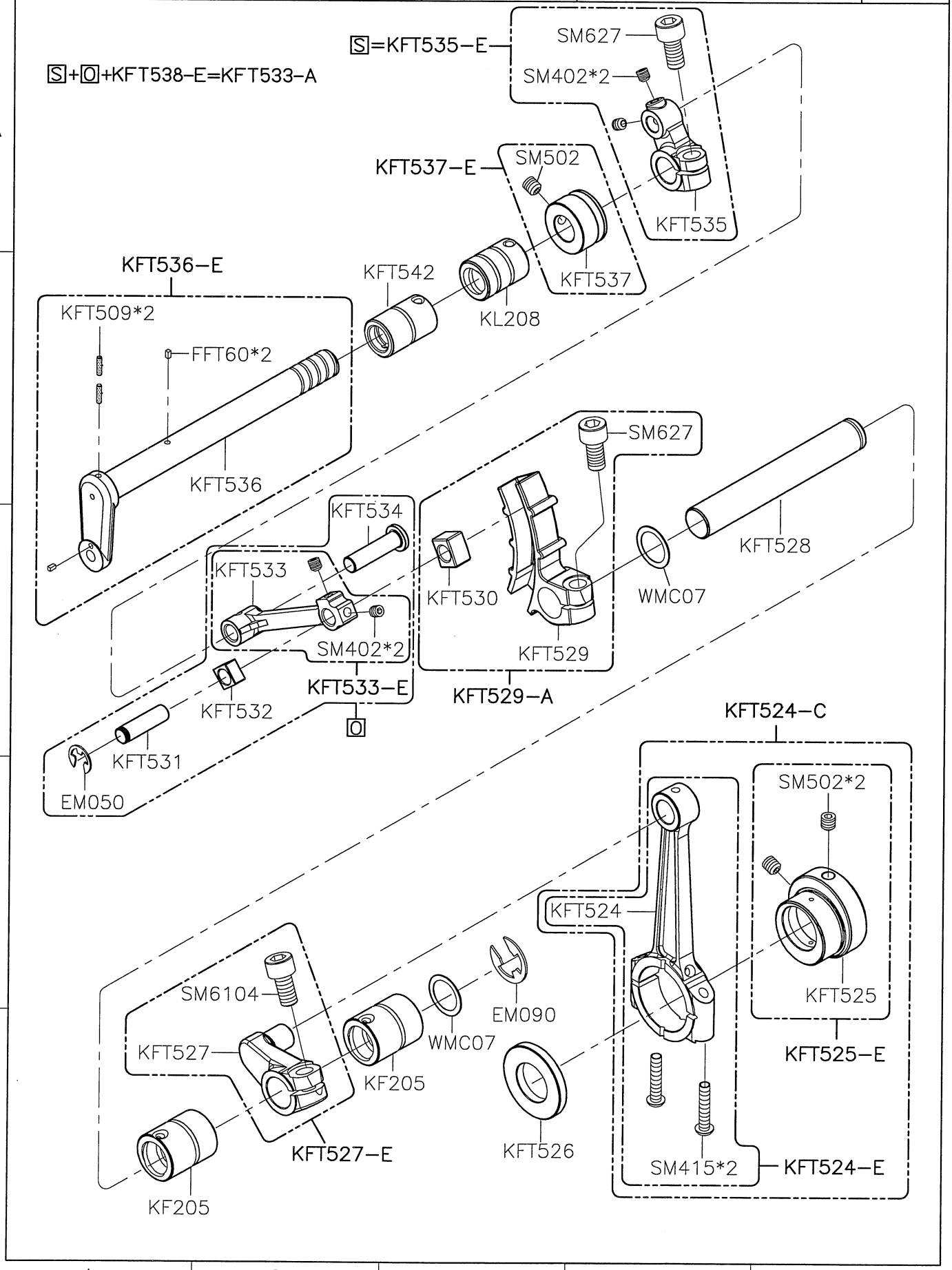

SIRUBA PARTS LIST	Series	Parts Group	Subclass / Remark	Page
	700KST	FT		3/4
				Date
				2015/06/23

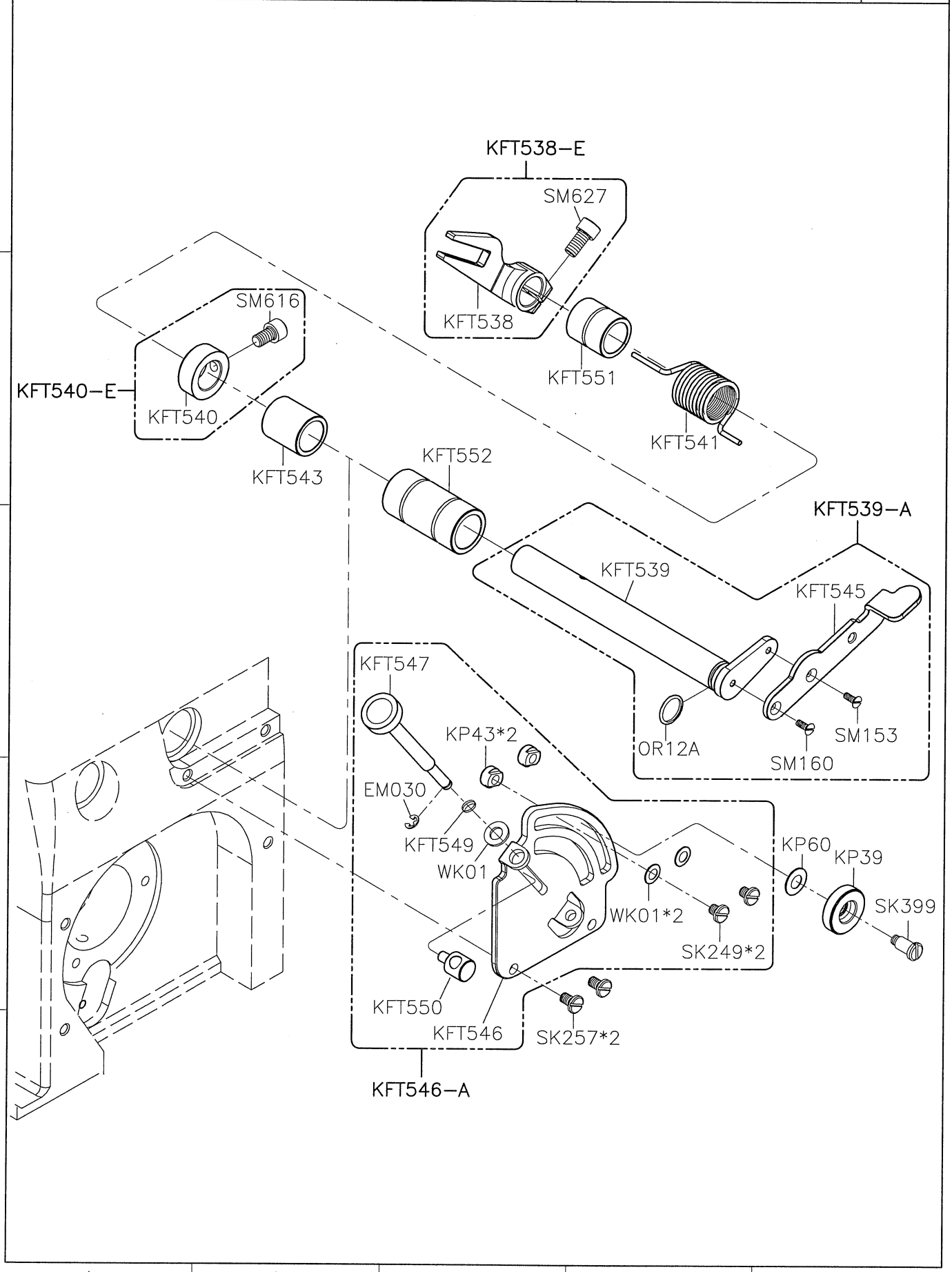

SIRUBA PARTS LIST	Series	Parts Group	Subclass / Remark	Page
	700KS/T	FT		4/4
				Date
				2014/05/30

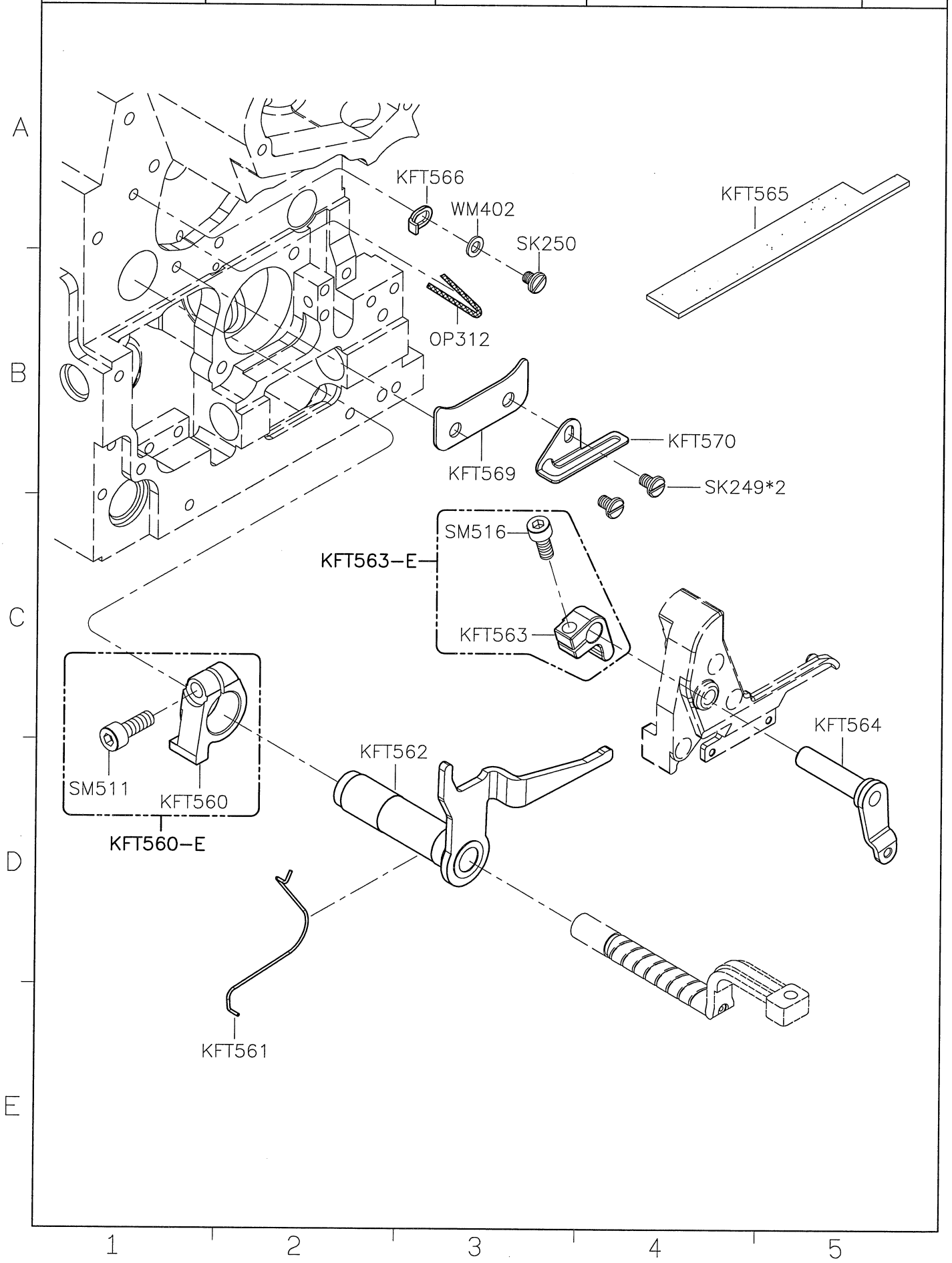

SiRUBA	Series	Item Code	Subclass Remark	Mounting
TABLE CUT - OUT	700KS/T	700KS-T	UNIT: mm TOLERANCE: ±2 WEIGHT: 11.6 kg ±5%	Semi-submerged
				Date
				2014/06/18

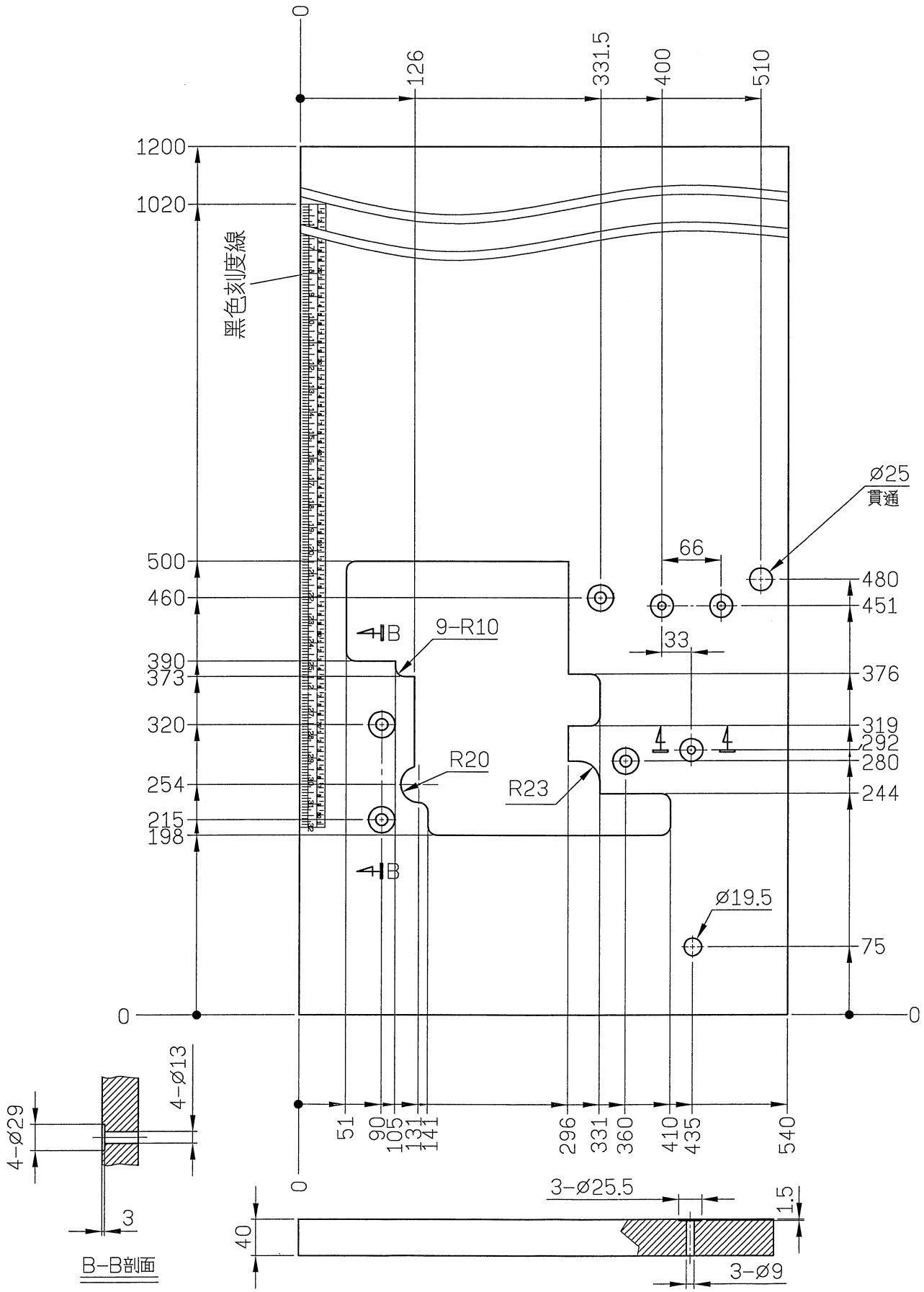

SiRUBA	Series	Item Code	Subclass Remark	Mounting
TABLE CUT - OUT	700KS/T	700KS-T1	UNIT: mm TOLERANCE: ±2 WEIGHT: 11.6 kg ±5%	Semi-submerged
				Date
				2013/09/30

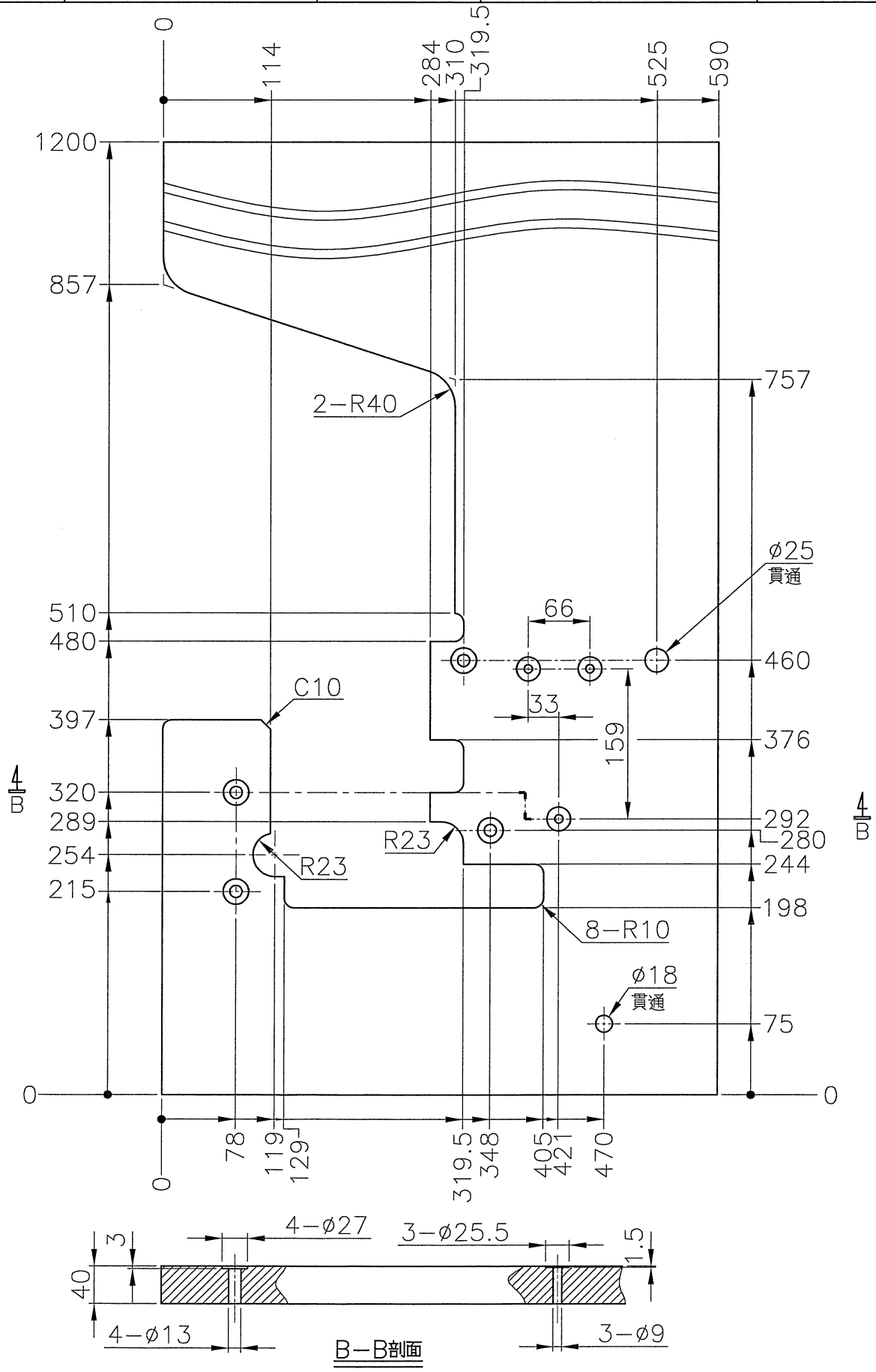

SiRUBA TABLE CUT - OUT	Series	Item Code	Subclass Remark	Mounting
	700KS/T	700KS-T2	UNIT: mm TOLERANCE: ±2 WEIGHT: 11.6 kg ±5%	Semi-submerged installation
				Date
				2014/06/18

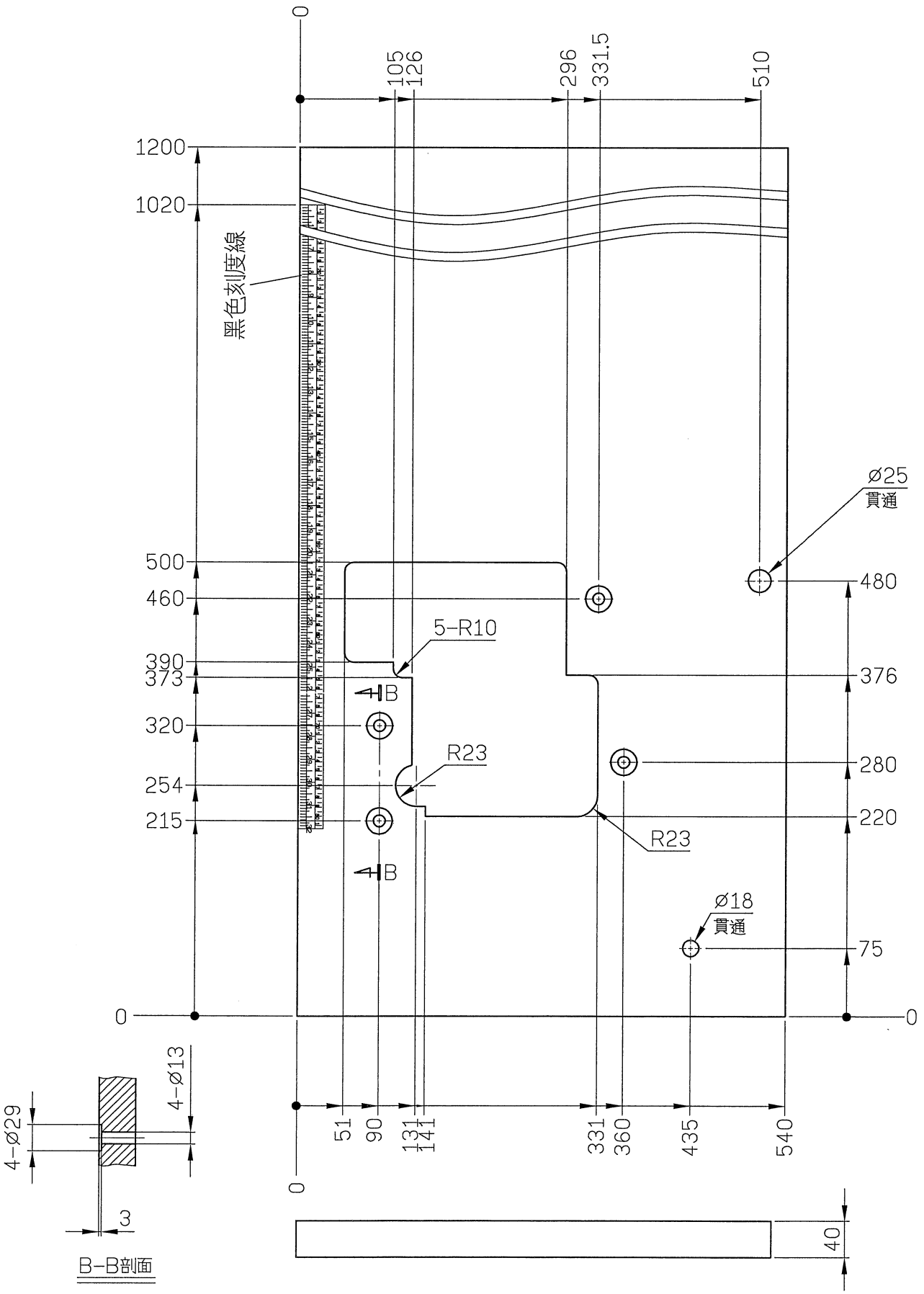

SiRUBA TABLE CUT - OUT	Series	Item Code	Subclass Remark	Mounting
	700KS/T	700KS-T3	UNIT: mm TOLERANCE: ±2 WEIGHT: 11.6 kg ±5%	Semi-submerged installation Date 2014/06/05

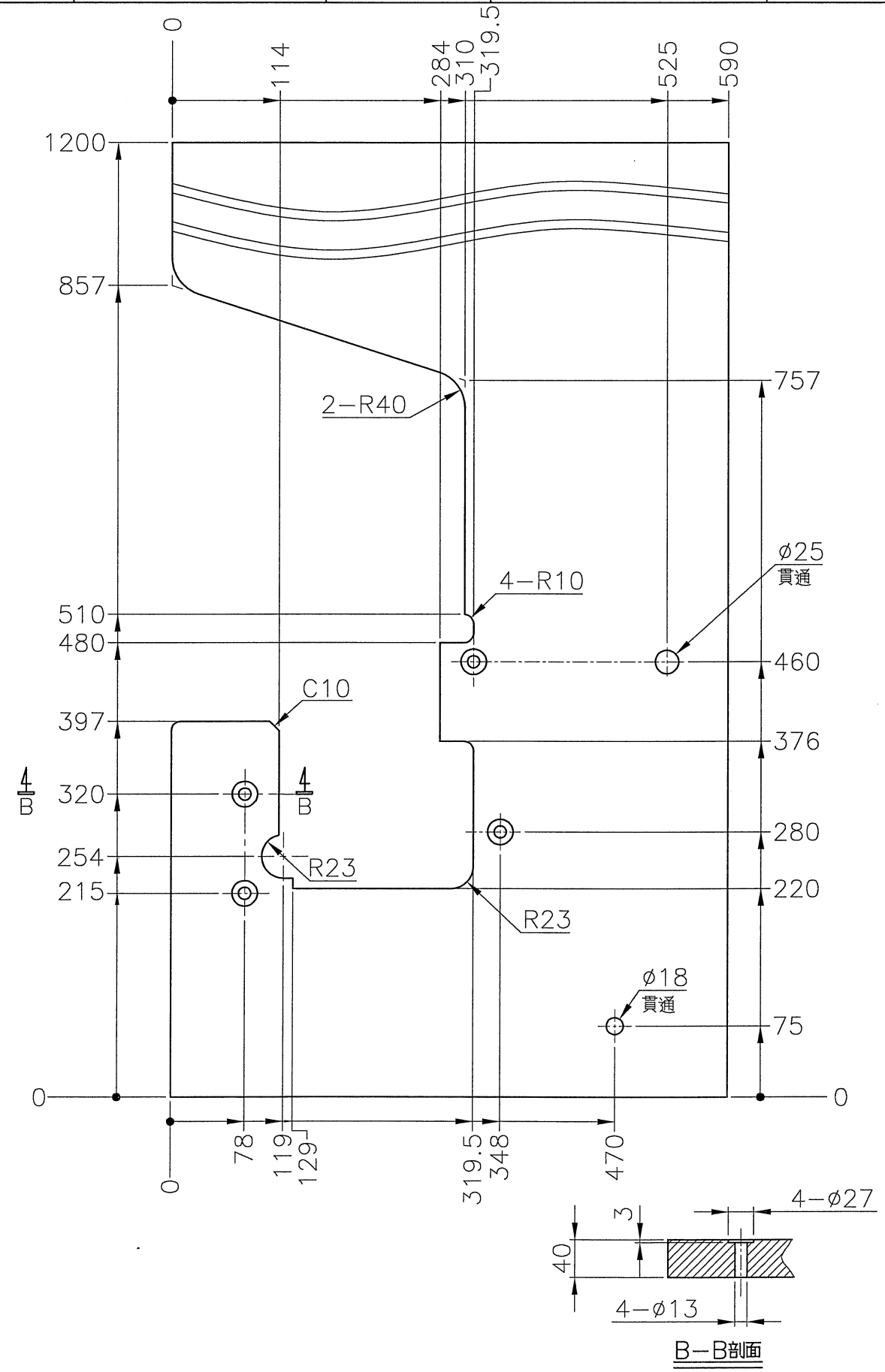
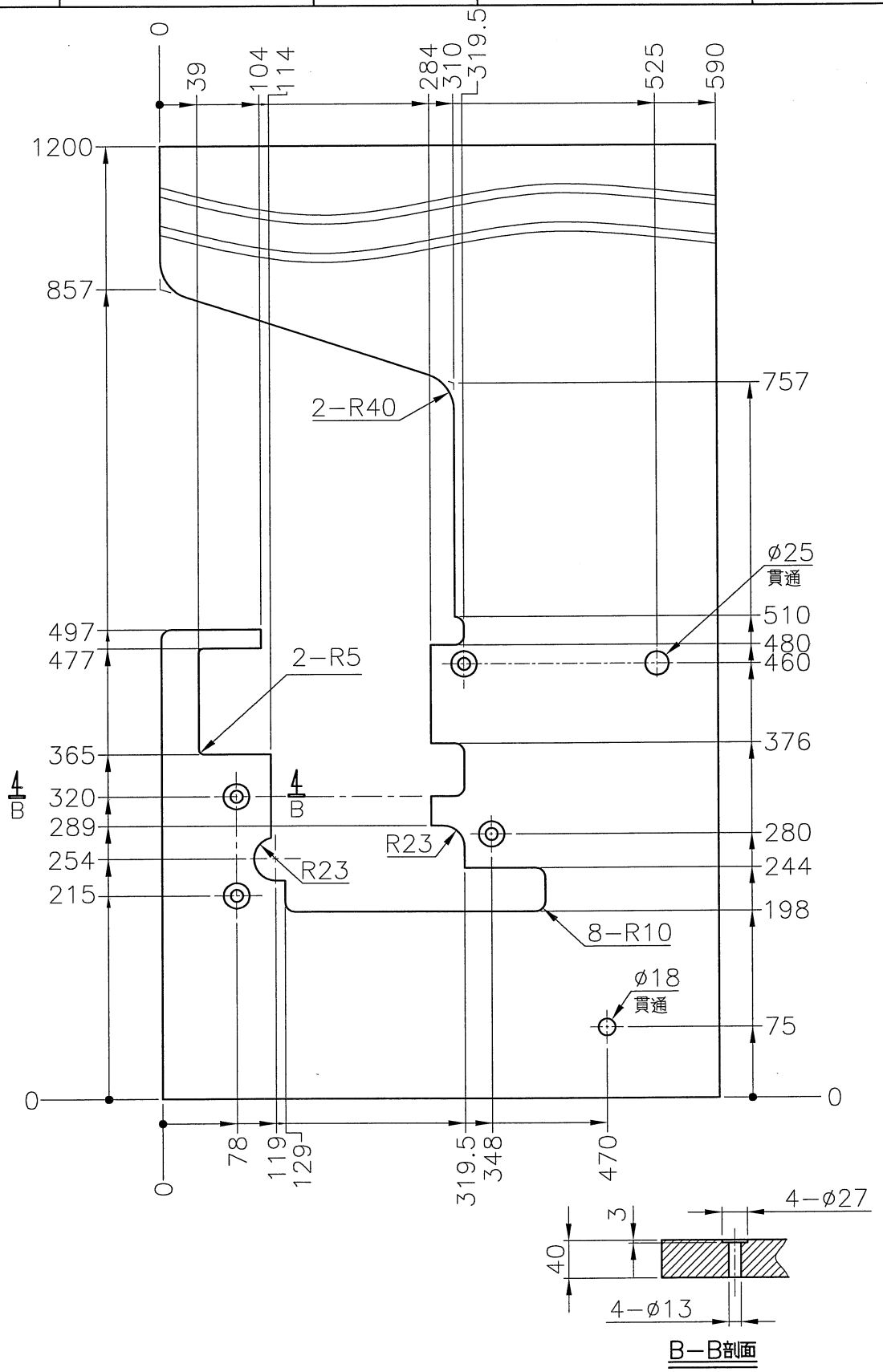
SiRUBA TABLE CUT - OUT	Series	Item Code	Subclass Remark	Mounting
	700KS/T	700KS-T4	UNIT: mm TOLERANCE: ±2 WEIGHT: 11.6 kg ±5%	Semi-submerged installation Date 2016/08/08