SiRUBA PARTS LIST	Series	Parts Group	Subclass / Remark	Page
	VC008A	VAR		1/1
				Date
				2024/11/05

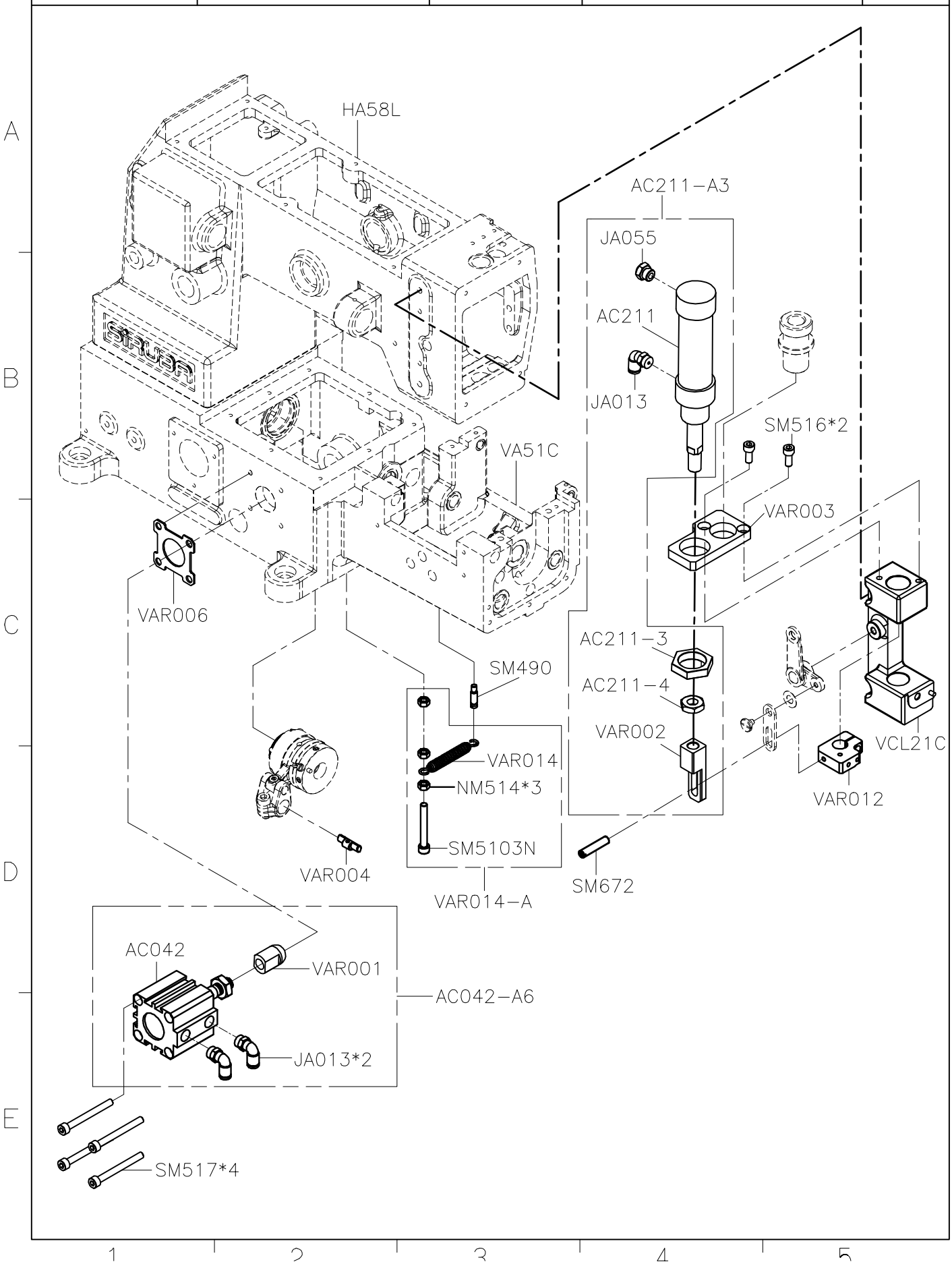

SiRUBA PARTS LIST	Series	Parts Group	Subclass / Remark	Page
	VC008A	VAR	一體式	2/2
				Date
				2024/06/06

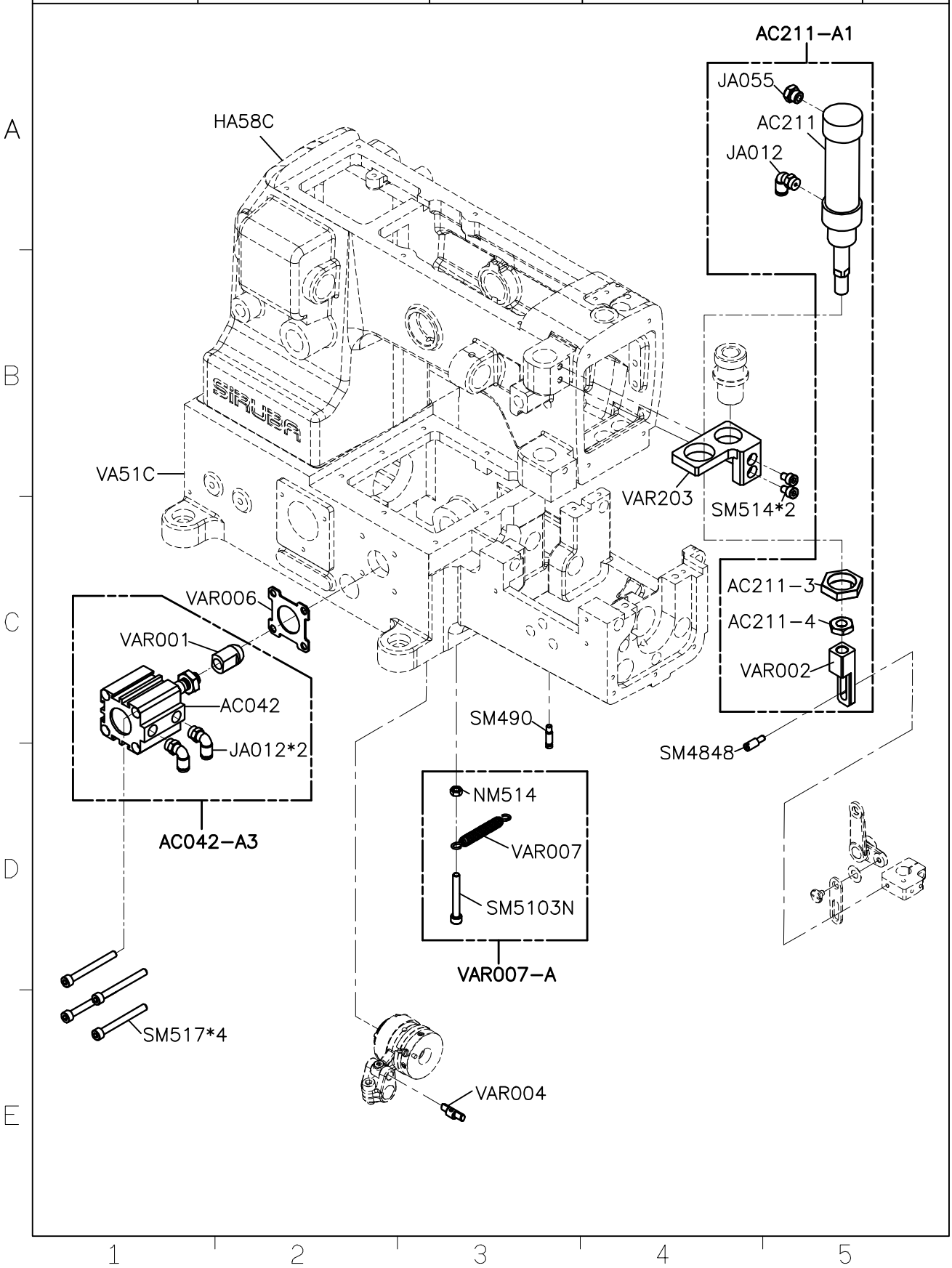

SIRUBA PARTS LIST	Series	Parts Group	Subclass / Remark	Page
	VC008A	VPL		1/1
				Date
				2022/09/05

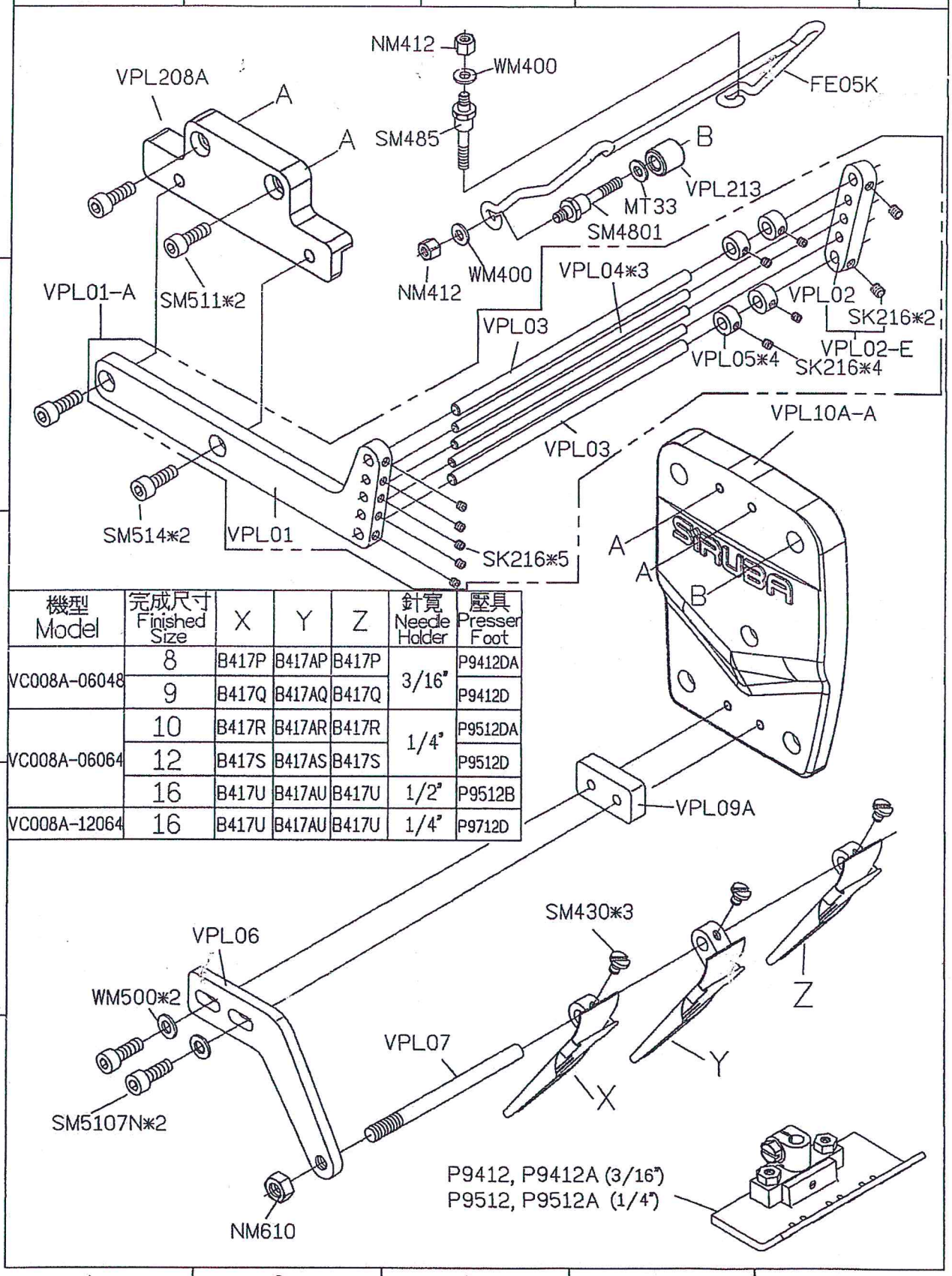

機型 Model	完成尺寸 Finished Size	X	Y	Z	針寛 Needle Holder	壓具 Presser Foot
VC008A-06048	8	B417P	B417AP	B417P	3/16"	P9412DA
	9	B417Q	B417AQ	B417Q		P9412D
VC008A-06064	10	B417R	B417AR	B417R	1/4"	P9512DA
	12	B417S	B417AS	B417S		P9512D
	16	B417U	B417AU	B417U	1/2"	P9512B
VC008A-12064	16	B417U	B417AU	B417U	1/4"	P9712D

SiRUBA PARTS LIST	Series	Parts Group	Subclass / Remark	Page
	VC008A	VPQ		1/2
				Date
				2024/01/31

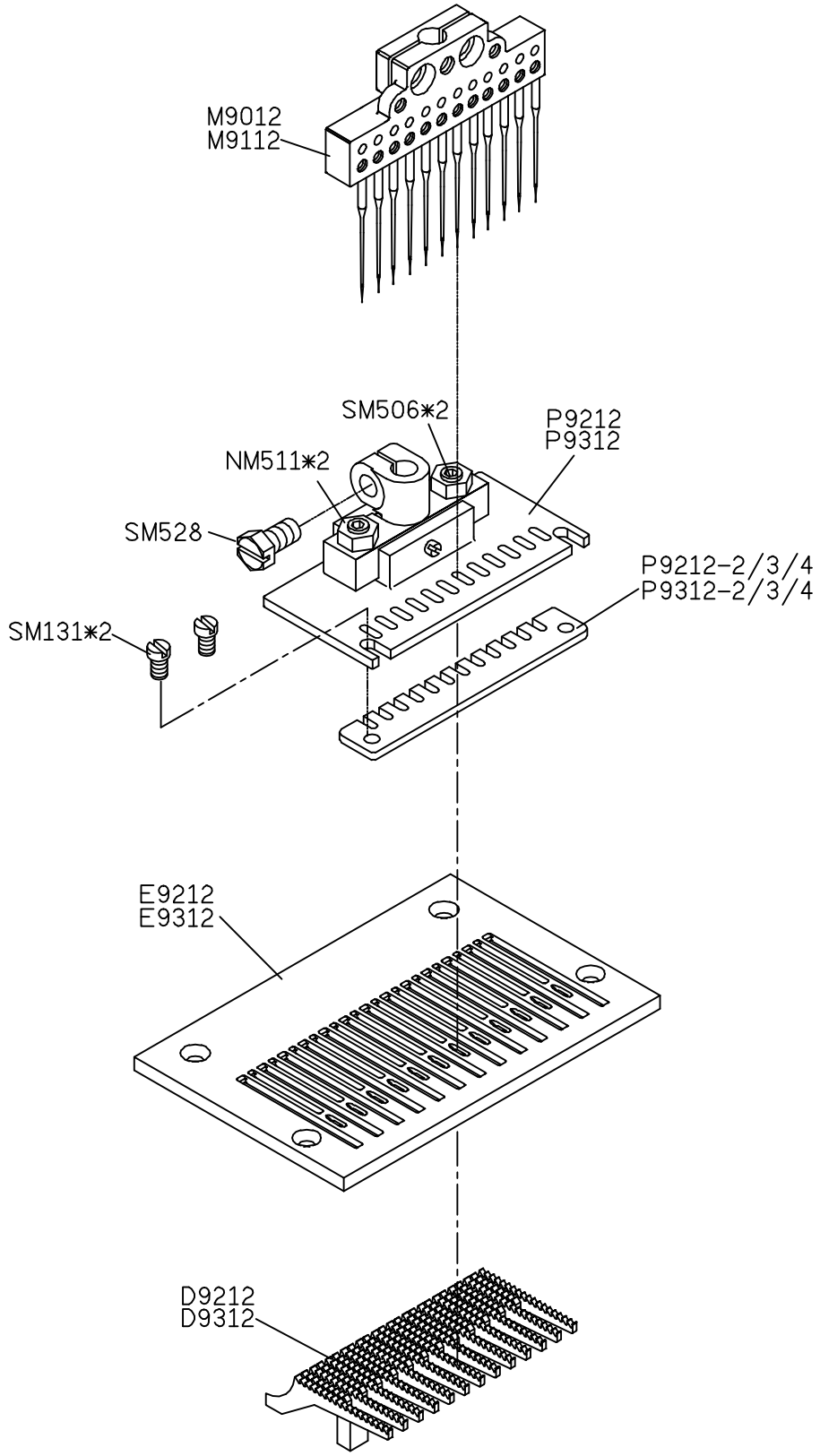

SiRUBA PARTS LIST	Series	Parts Group	Subclass / Remark	Page
	VC008A	VPQ		2/2
				Date
				2024/01/31

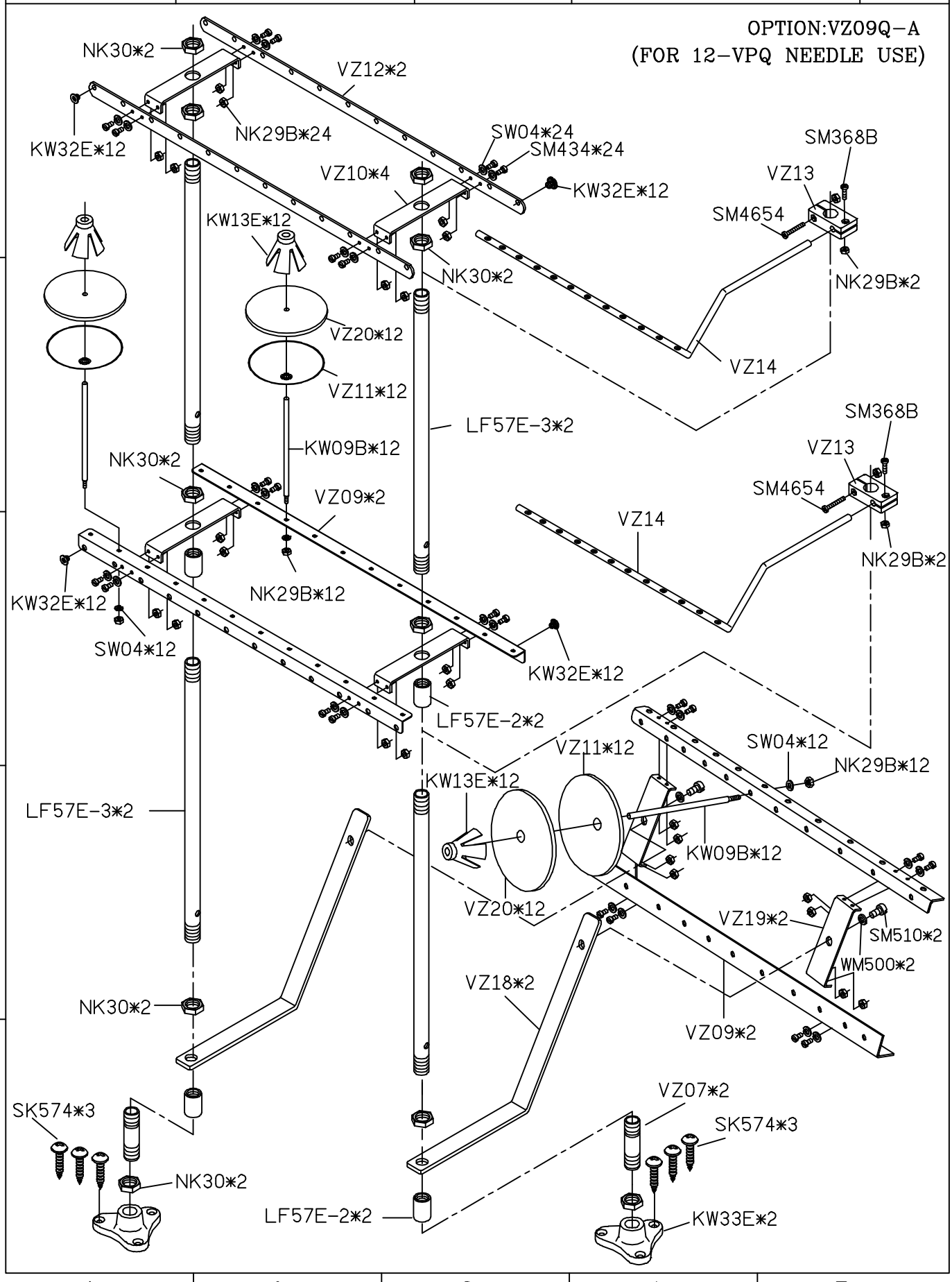

SiRUBA PARTS LIST	Series	Parts Group	Subclass / Remark	Page
	VC008A	VPQK		1/5
				Date
				2024/01/31

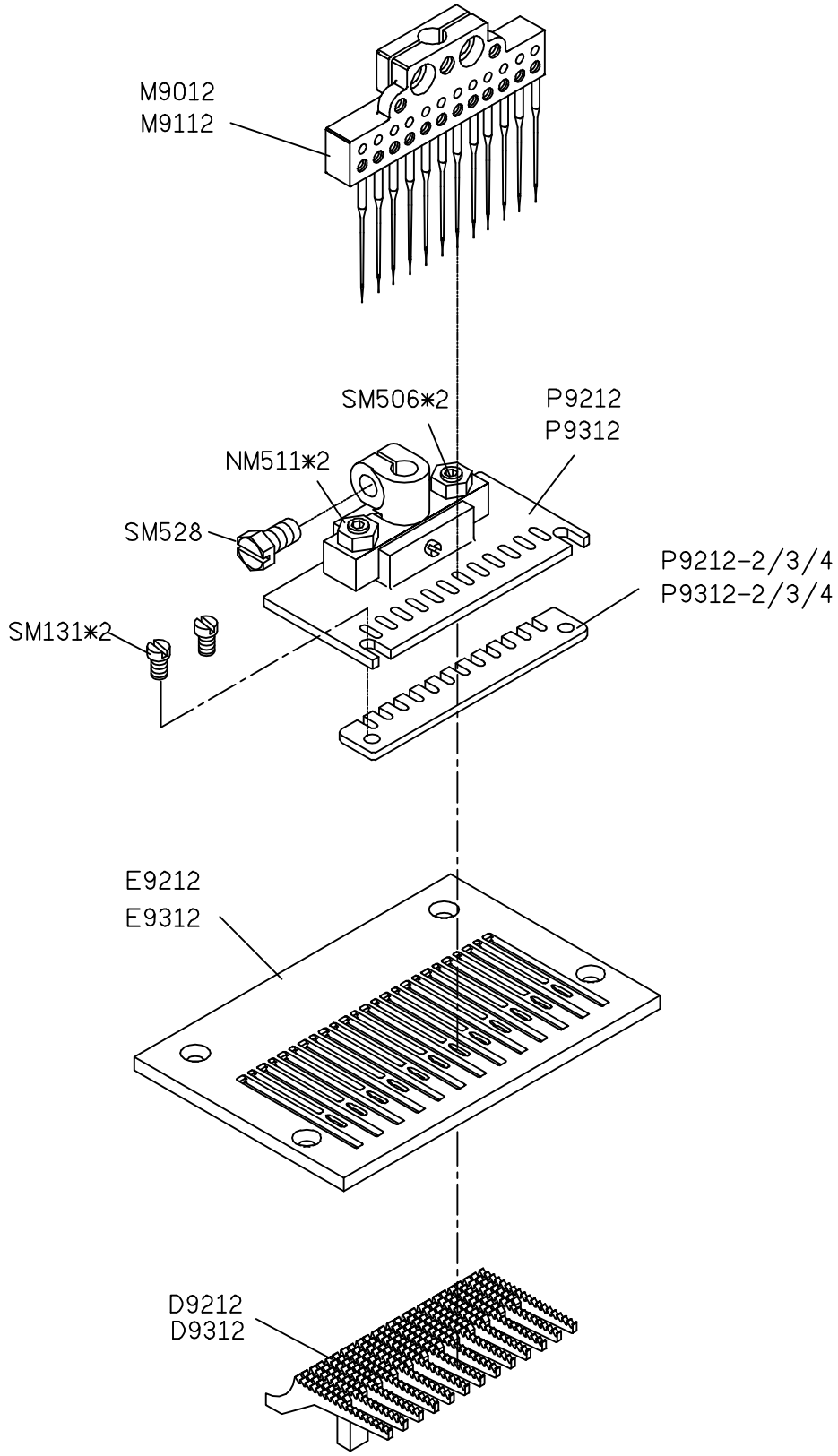

SIRUBA PARTS LIST	Series	Parts Group	Subclass / Remark	Page
	VC008A	VPQK		2/5
				Date
				2024/01/31

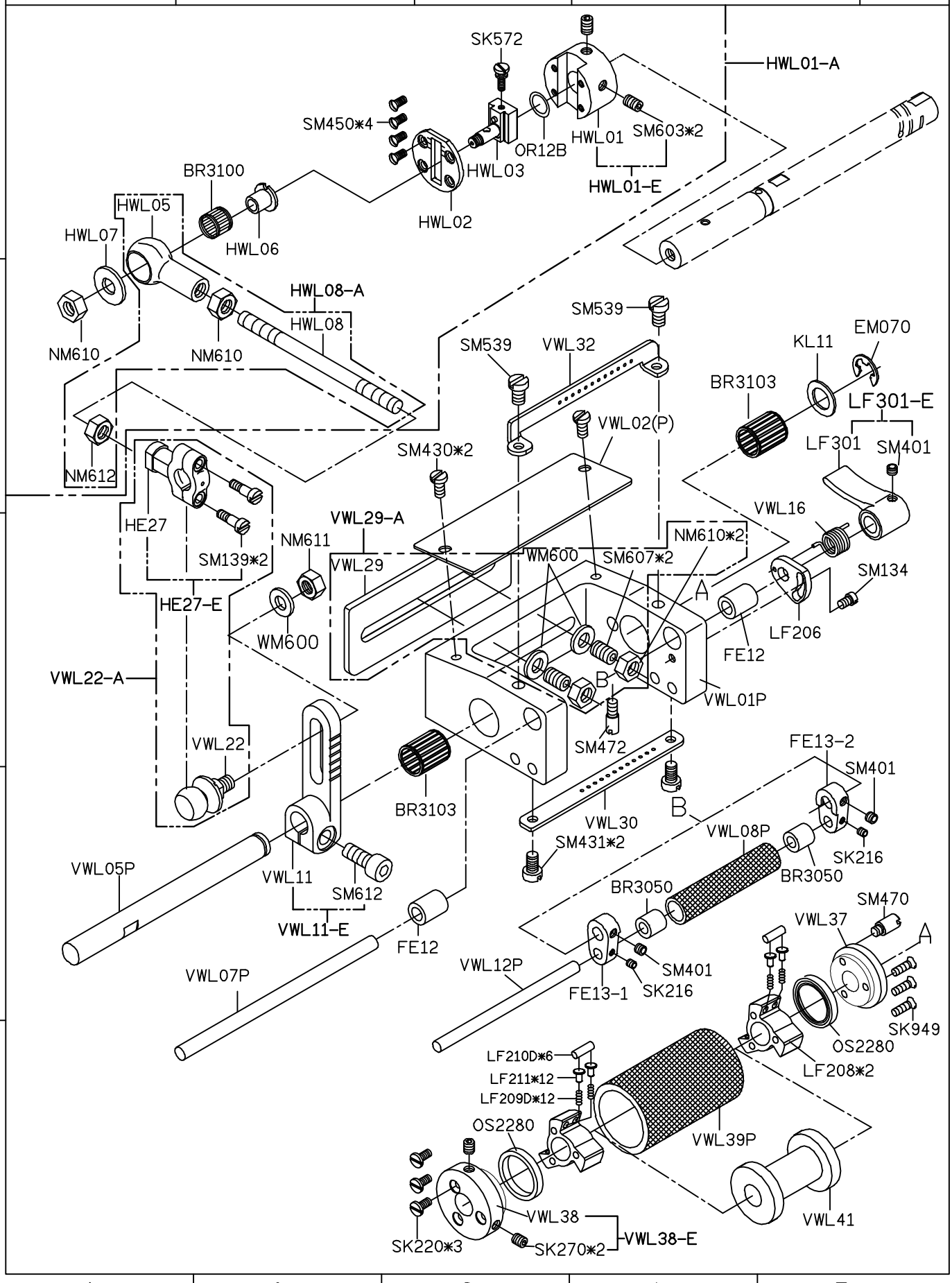

SiRUBA PARTS LIST	Series	Parts Group	Subclass / Remark	Page
	VC008A	VPQK		3/5
				Date
				2024/01/31

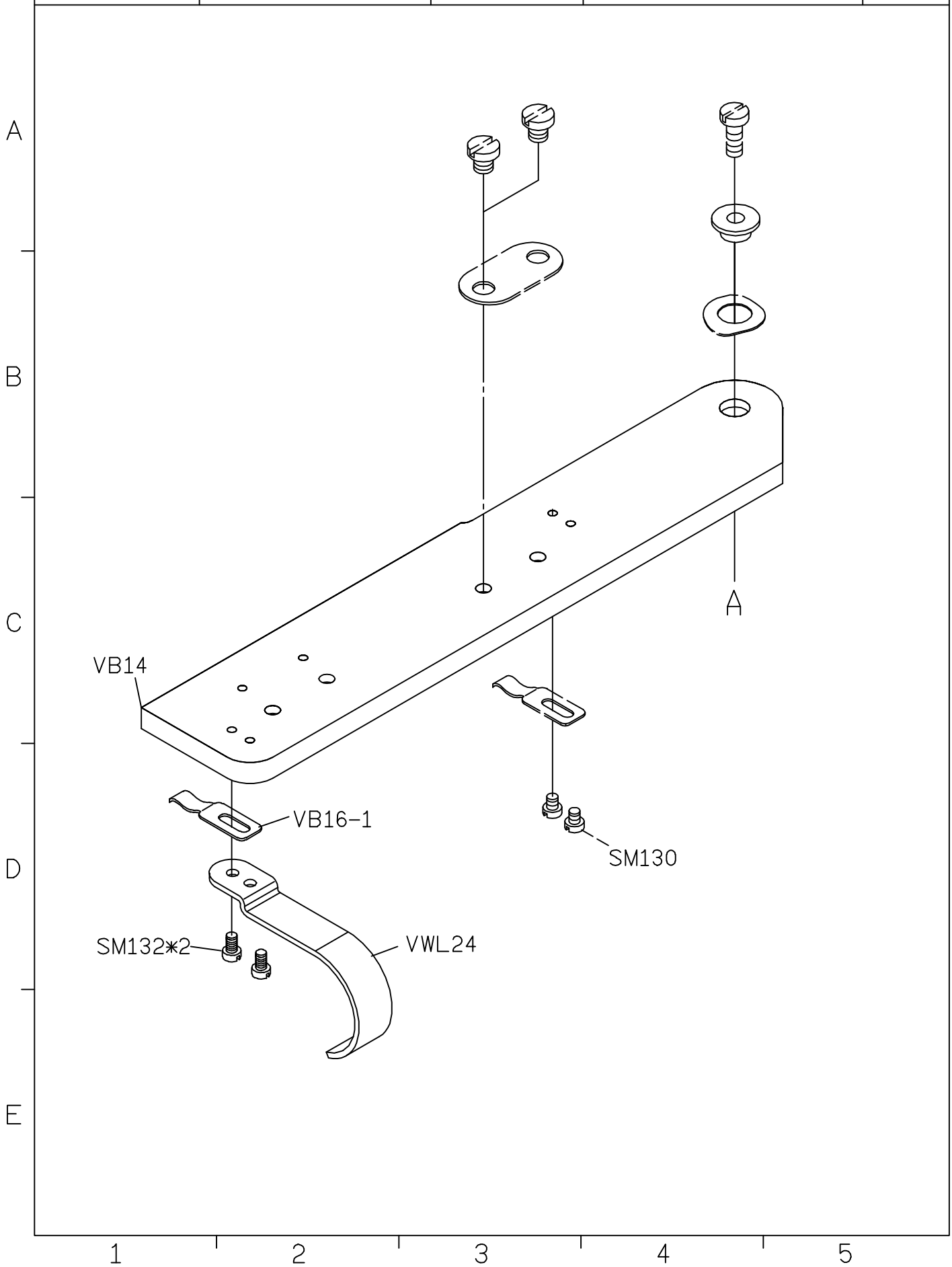

SiRUBA PARTS LIST	Series	Parts Group	Subclass / Remark	Page
	VC008A	VPQK		4/5
				Date
				2024/01/31

OPTION:VZ09Q-A1(1/2)

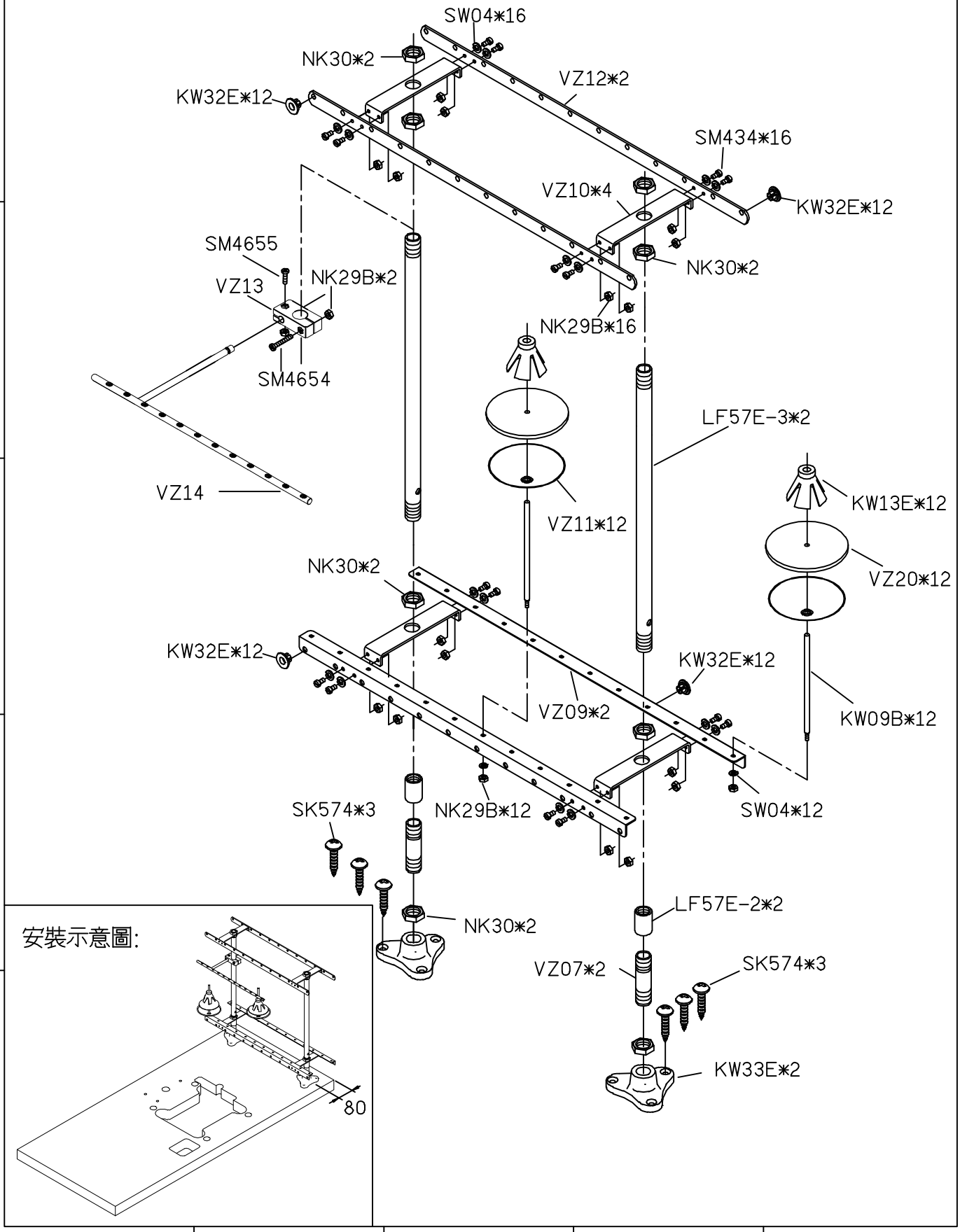

SiRUBA PARTS LIST	Series	Parts Group	Subclass / Remark	Page
	VC008A	VPQK		5/5
				Date
				2024/01/31

OPTION:VZ09Q-A1(2/2)

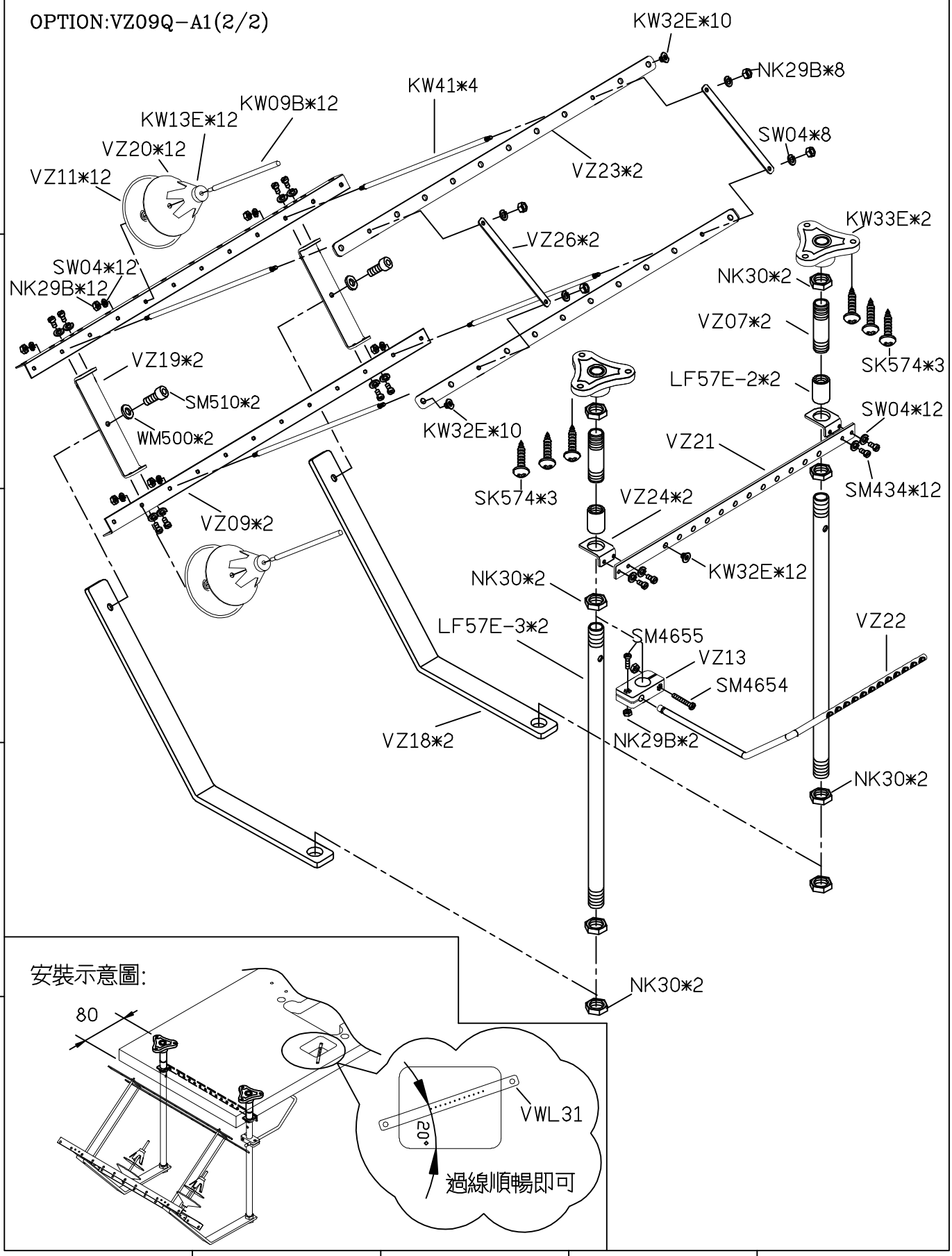

SiRUBA PARTS LIST	Series	Parts Group	Subclass / Remark	Page
	VC008A	VSC		1/7
				Date
				2022/11/14

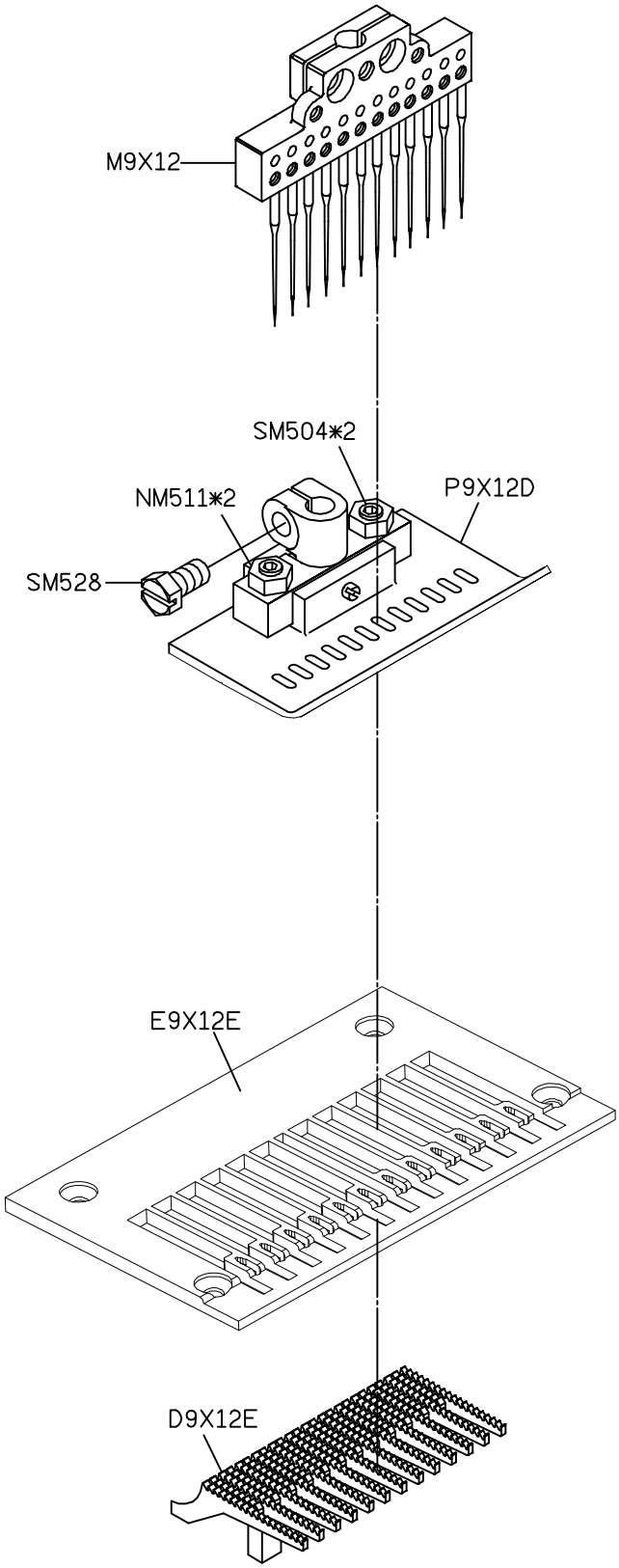

SIRUBA PARTS LIST	Series	Parts Group	Subclass / Remark	Page
	VC008A	VSC		2/7
				Date
				2022/12/20

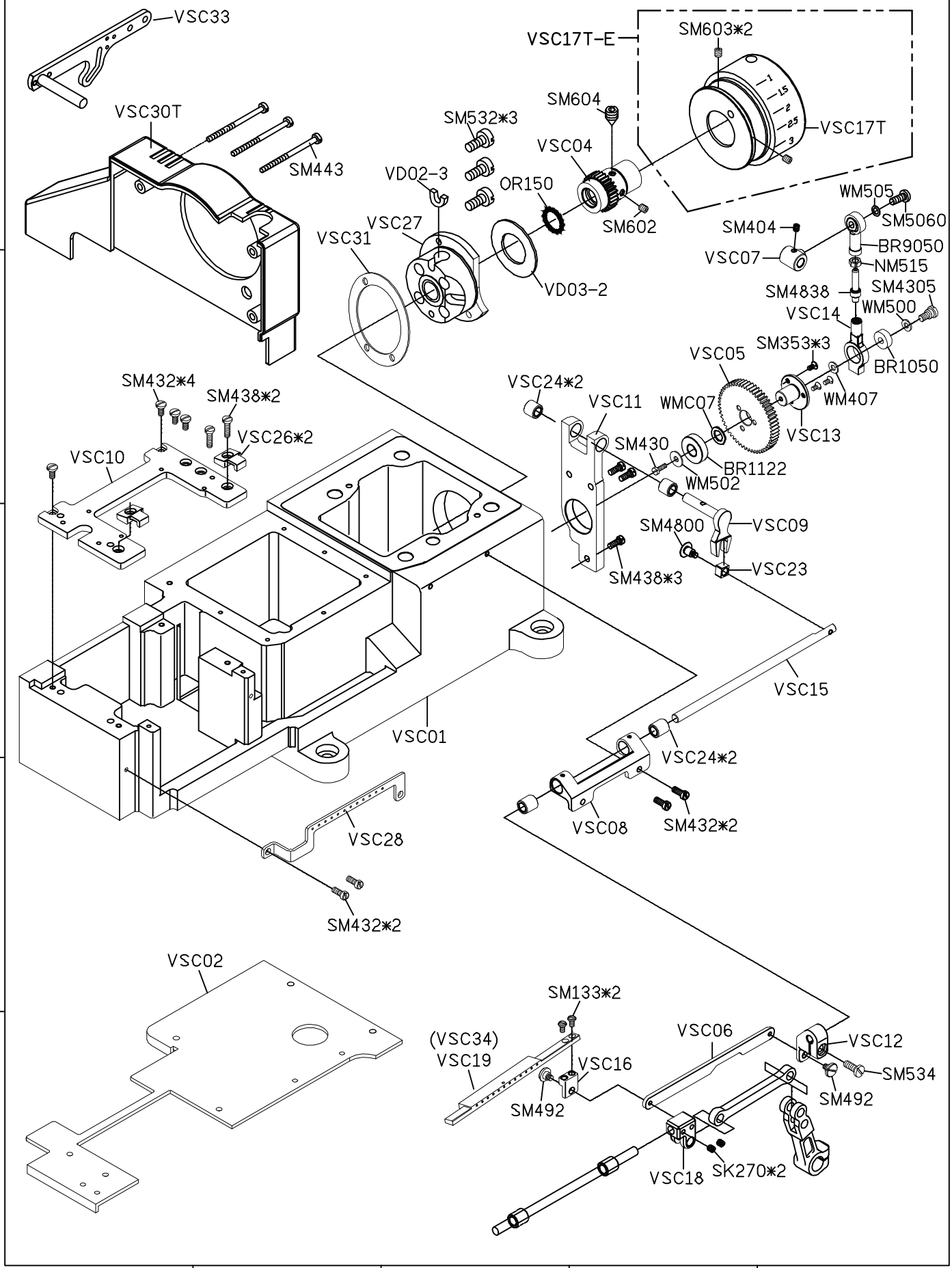

SiRUBA PARTS LIST	Series	Parts Group	Subclass / Remark	Page
	VC008A	VSC		3/7
				Date
				2022/11/14

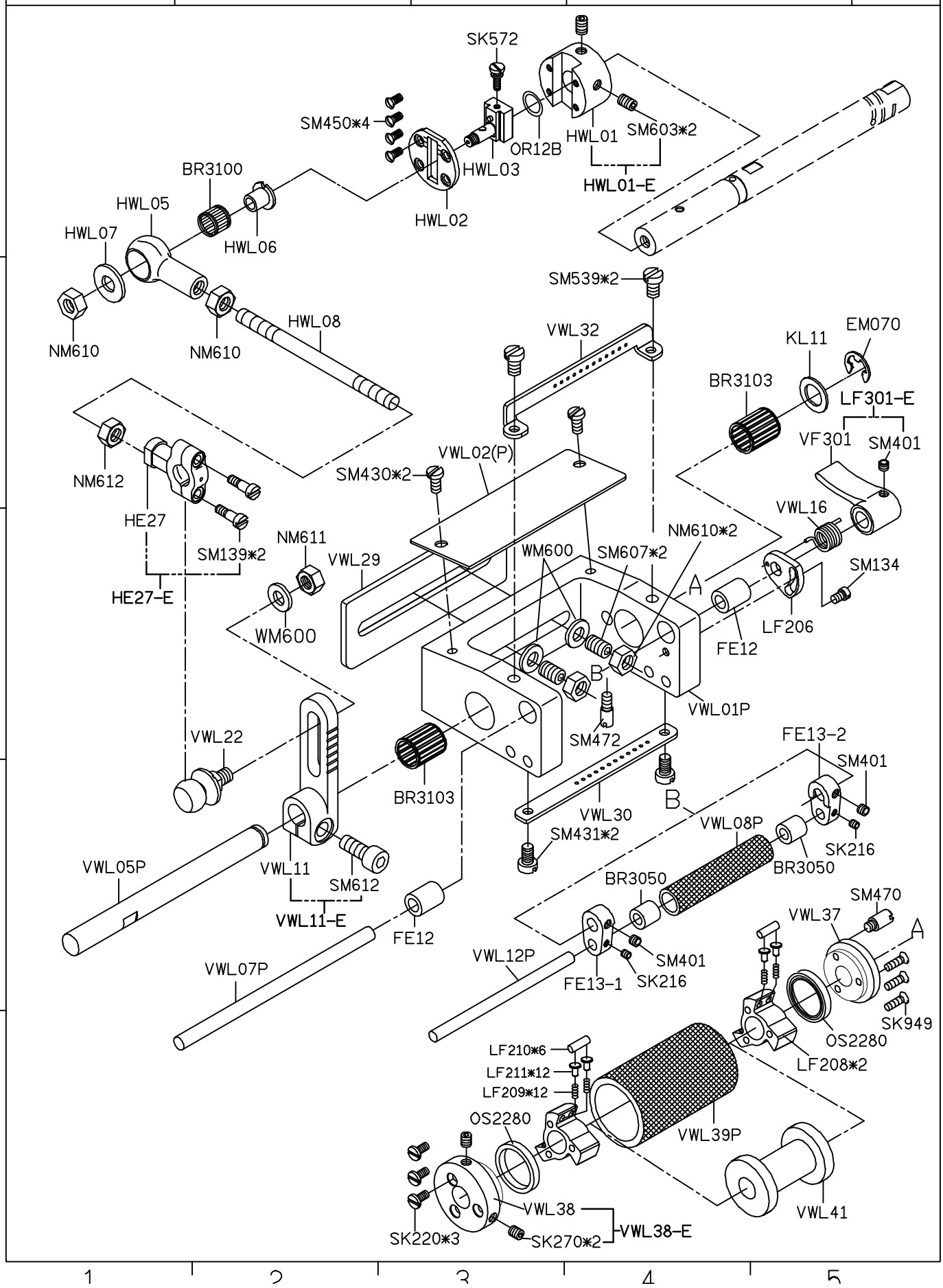

SiRUBA PARTS LIST	Series	Parts Group	Subclass / Remark	Page
	VC008A	VSC		4/7
				Date
				2022/11/14

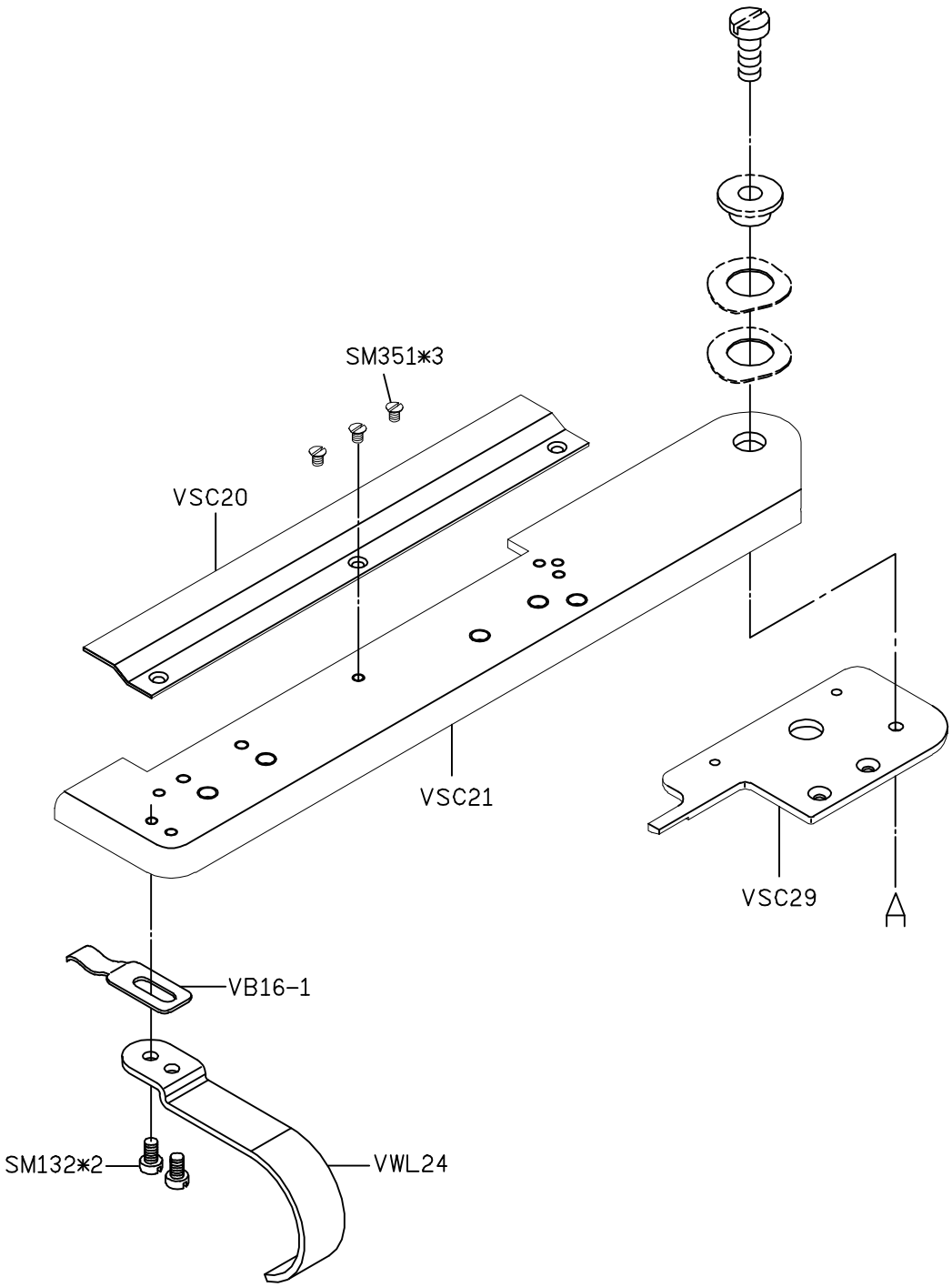

SiRUBA PARTS LIST	Series	Parts Group	Subclass / Remark	Page
	VC008A	VSC		5/7
				Date
				2022/11/14

OPTION:VZ09C-A(1/2)

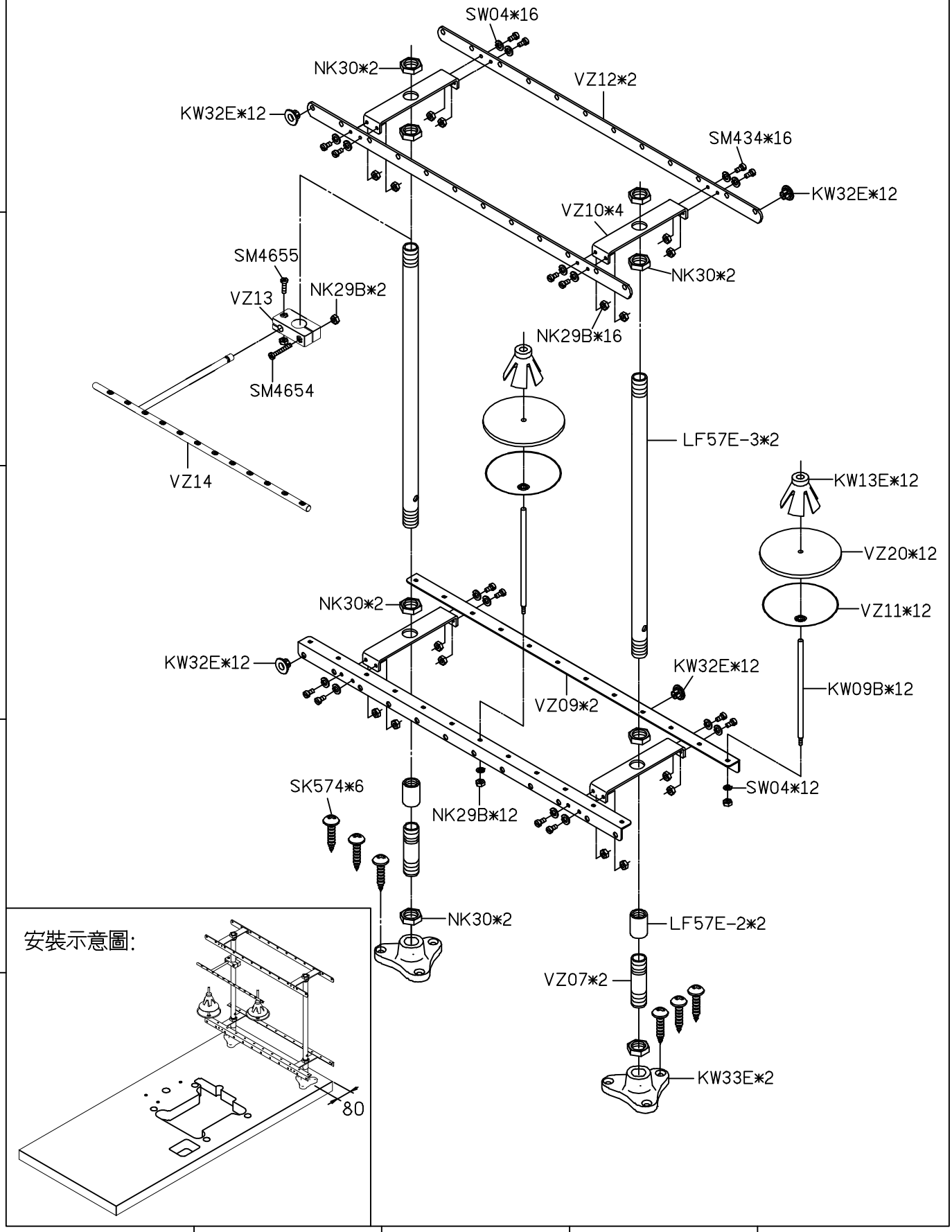

SiRUBA PARTS LIST	Series	Parts Group	Subclass / Remark	Page
	VC008A	VSC		6/7
				Date
				2022/11/14

OPTION:VZ09C-A(2/2)

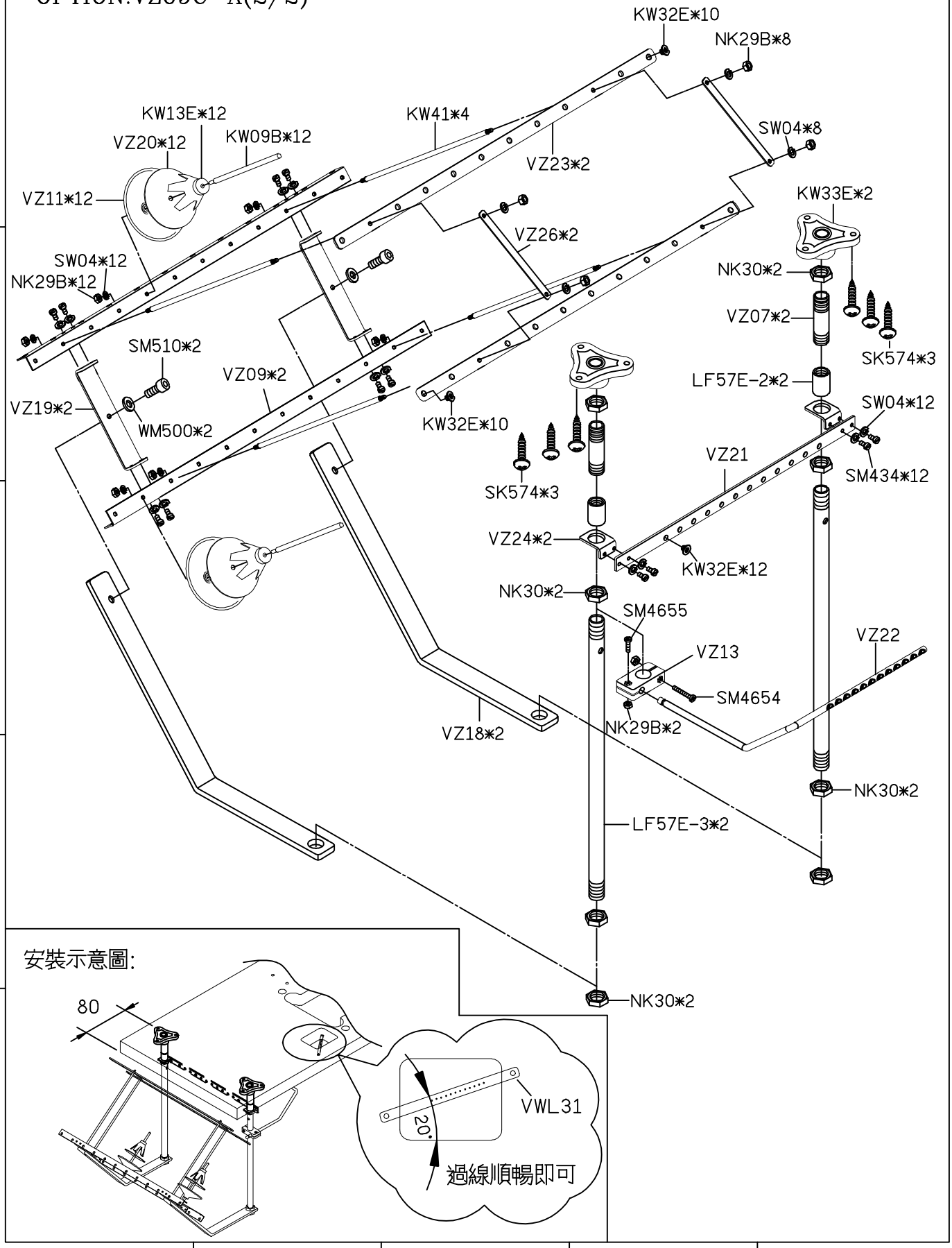

SIRUBA PARTS LIST	Series	Parts Group	Subclass / Remark	Page
	VC008A	VSC		7/7
				Date
				2022/11/14

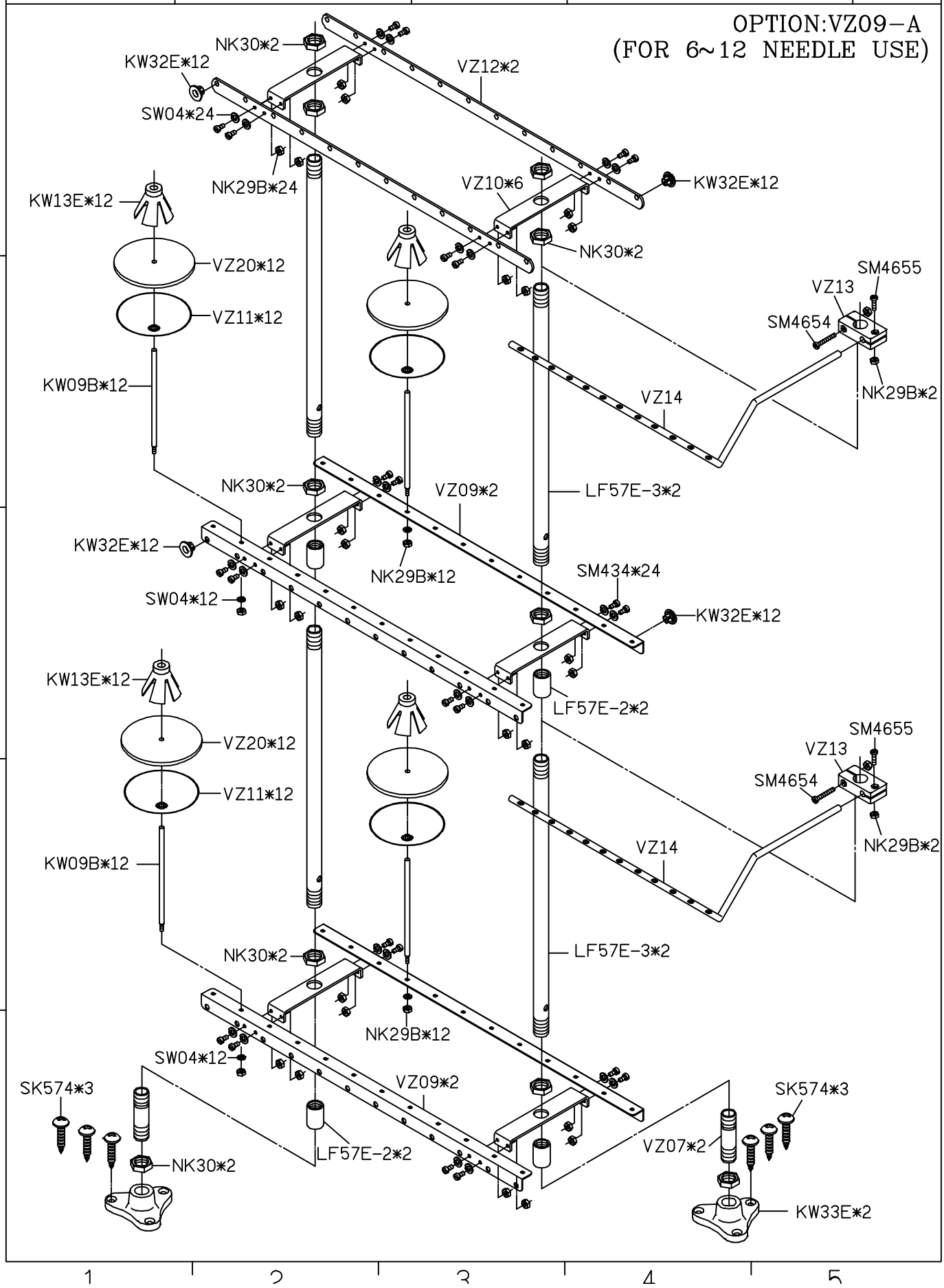

SiRUBA PARTS LIST	Series	Parts Group	Subclass / Remark	Page
	VC008A	VUT		1/10
				Date
				2024/04/16
BS-VUT				

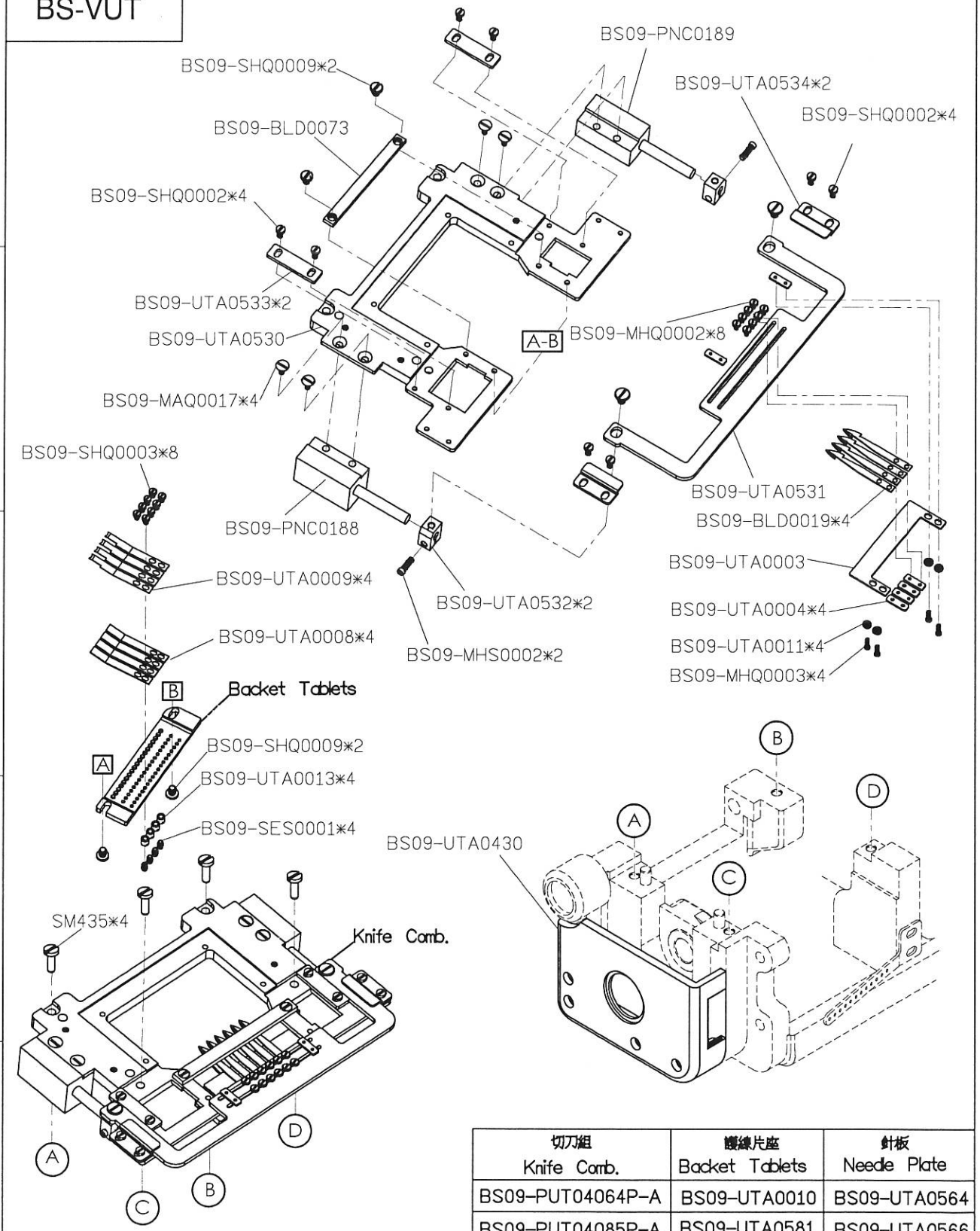

切刀組 Knife Comb.	護線片座 Backet Tablets	針板 Needle Plate
BS09-PUT04064P-A	BS09-UTA0010	BS09-UTA0564
BS09-PUT04085P-A	BS09-UTA0581	BS09-UTA0566
BS09-PUT04095P-A	BS09-UTA0010	BS09-UTA0568
BS09-PUT04127P-A	BS09-UTA0010	BS09-UTA0579

SIRUBA PARTS LIST	Series	Parts Group	Subclass / Remark	Page
	VC008A	VUT		2/10
				Date
				2024/04/16

BS-VUT

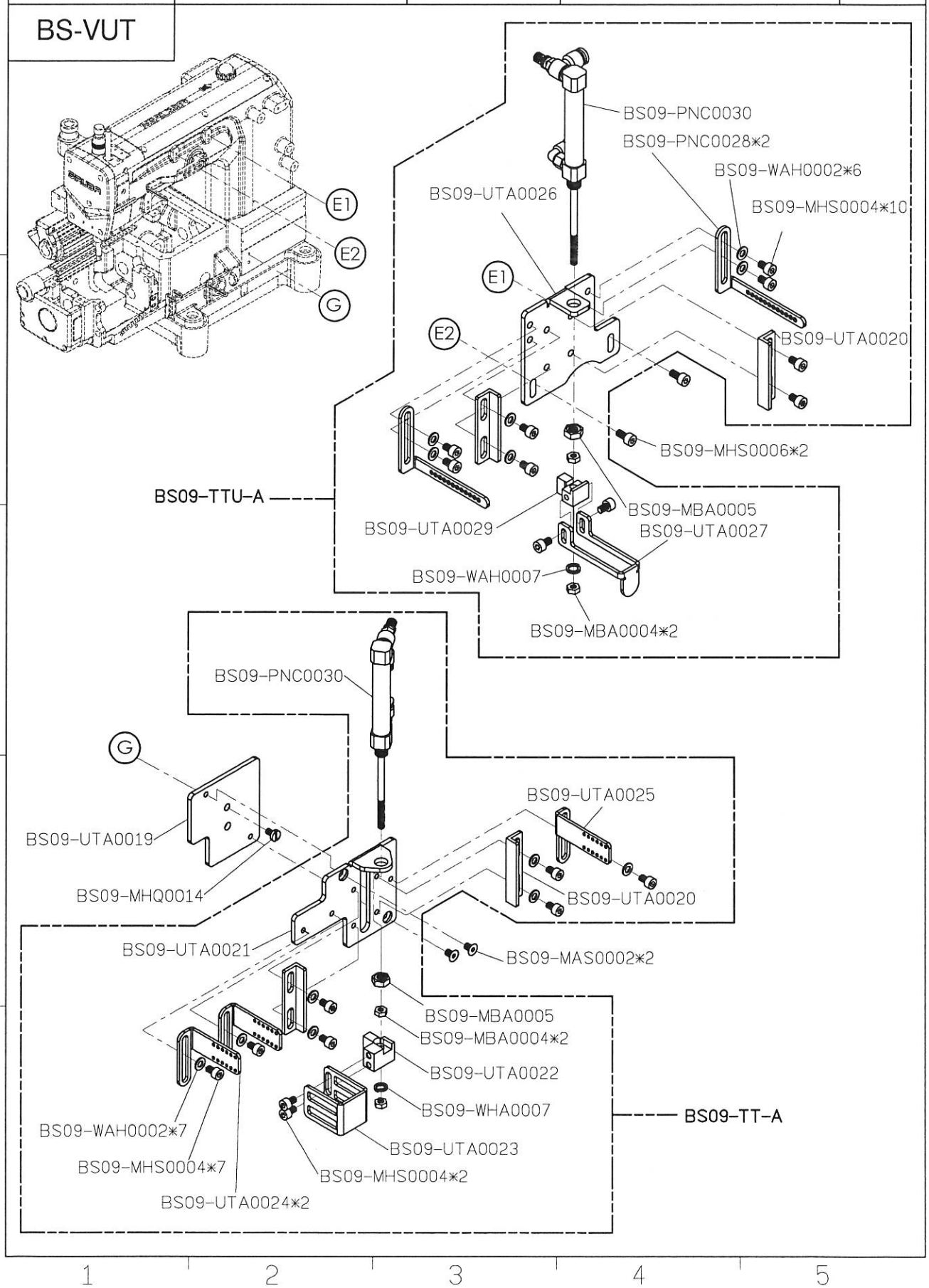

SIRUBA PARTS LIST	Series	Parts Group	Subclass / Remark	Page
	VC008A	VUT		3/10
				Date
				2024/04/16

BS-VUT

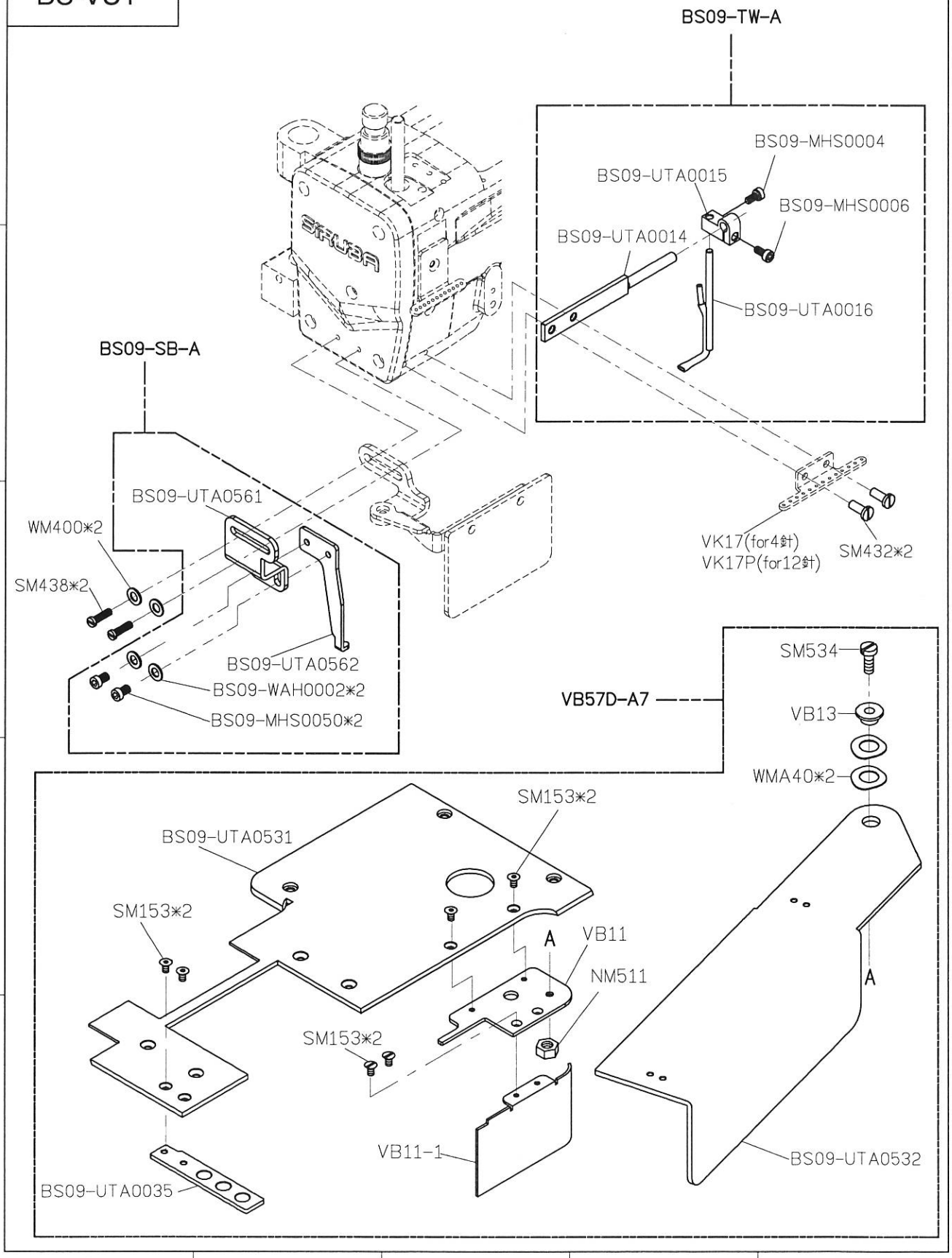

SIRUBA PARTS LIST	Series	Parts Group	Subclass / Remark	Page
	VC008A	VUT		4/10
				Date
				2024/04/16

BS-VUT

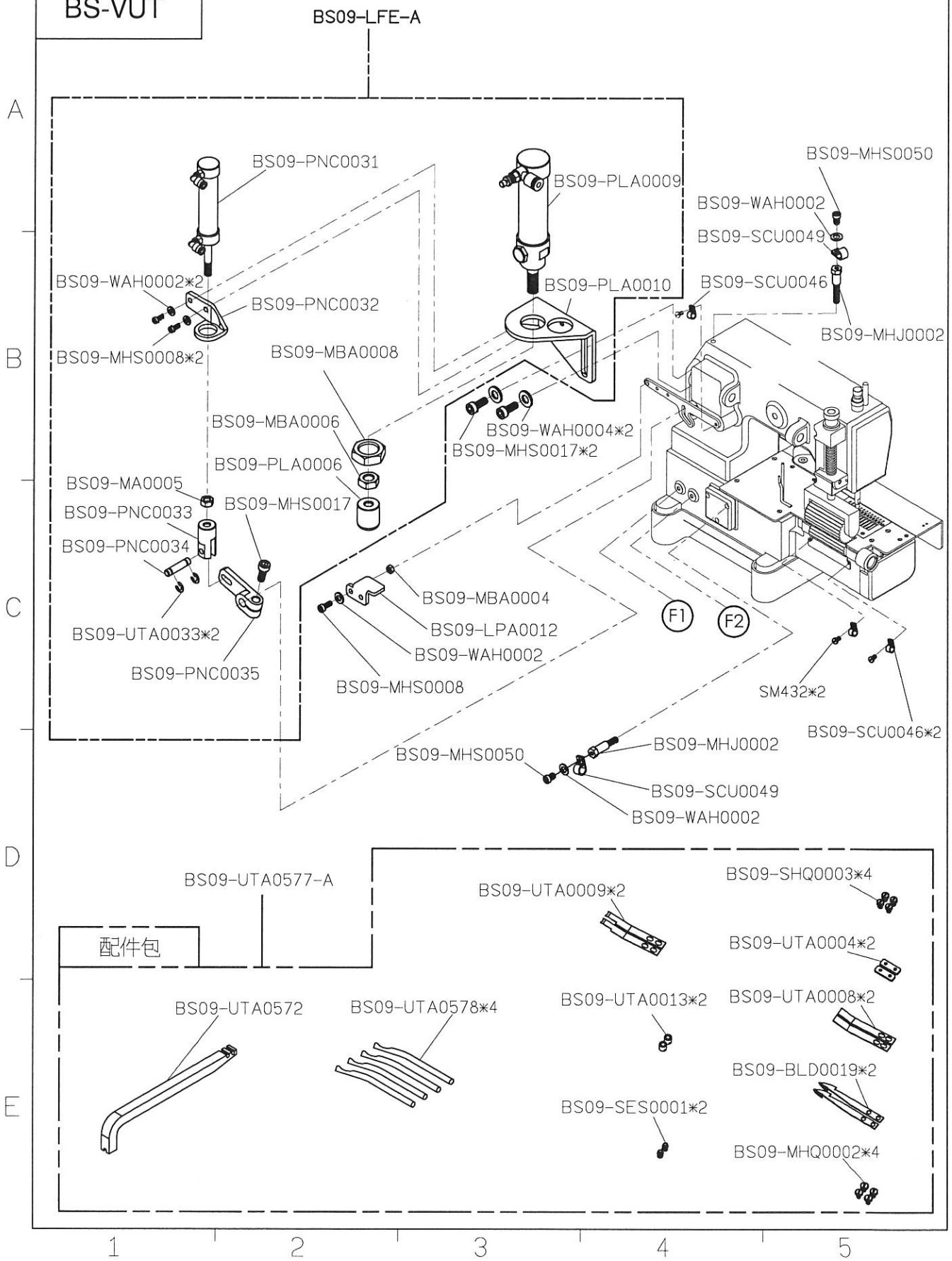

SiRUBA PARTS LIST	Series	Parts Group	Subclass / Remark	Page
	VC008A	VUT		5/10
				Date
				2024/04/16

BS-VUT

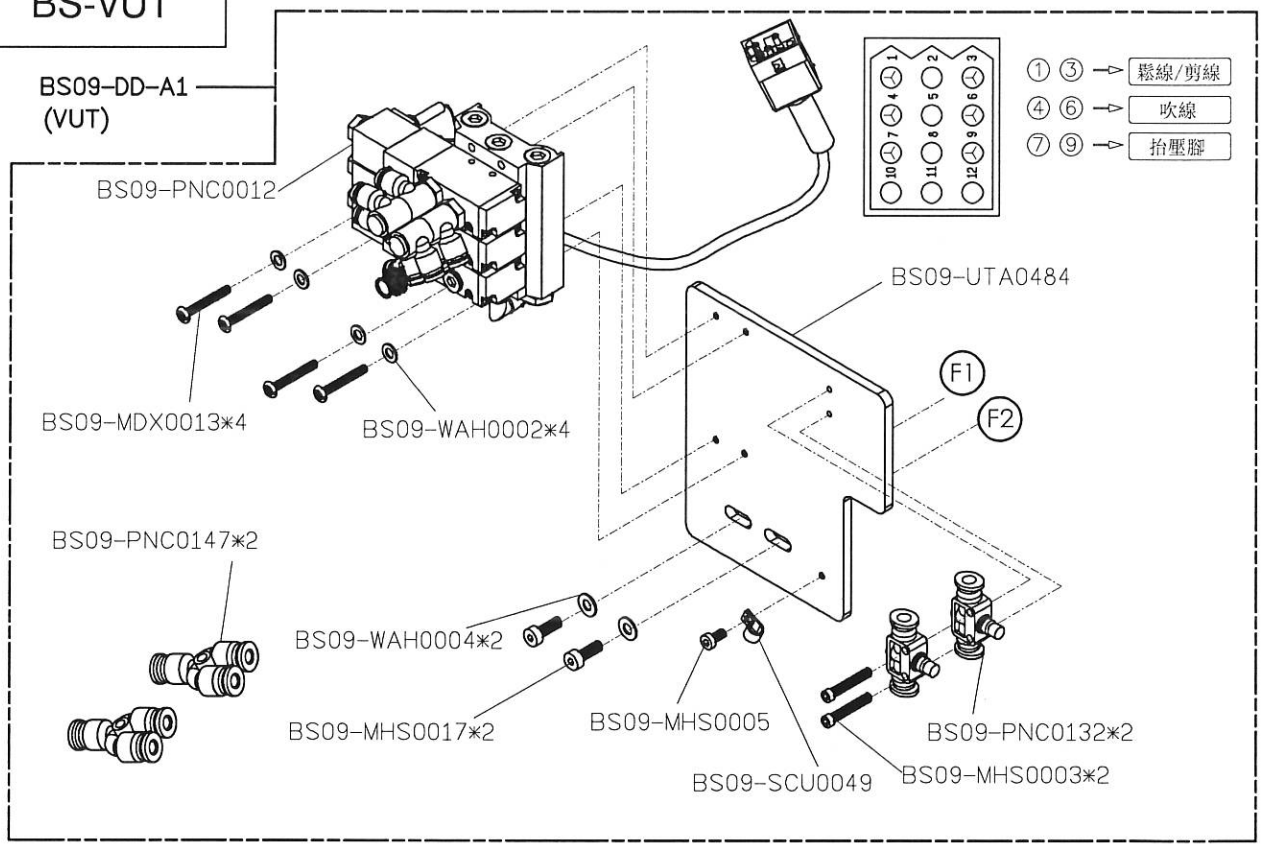

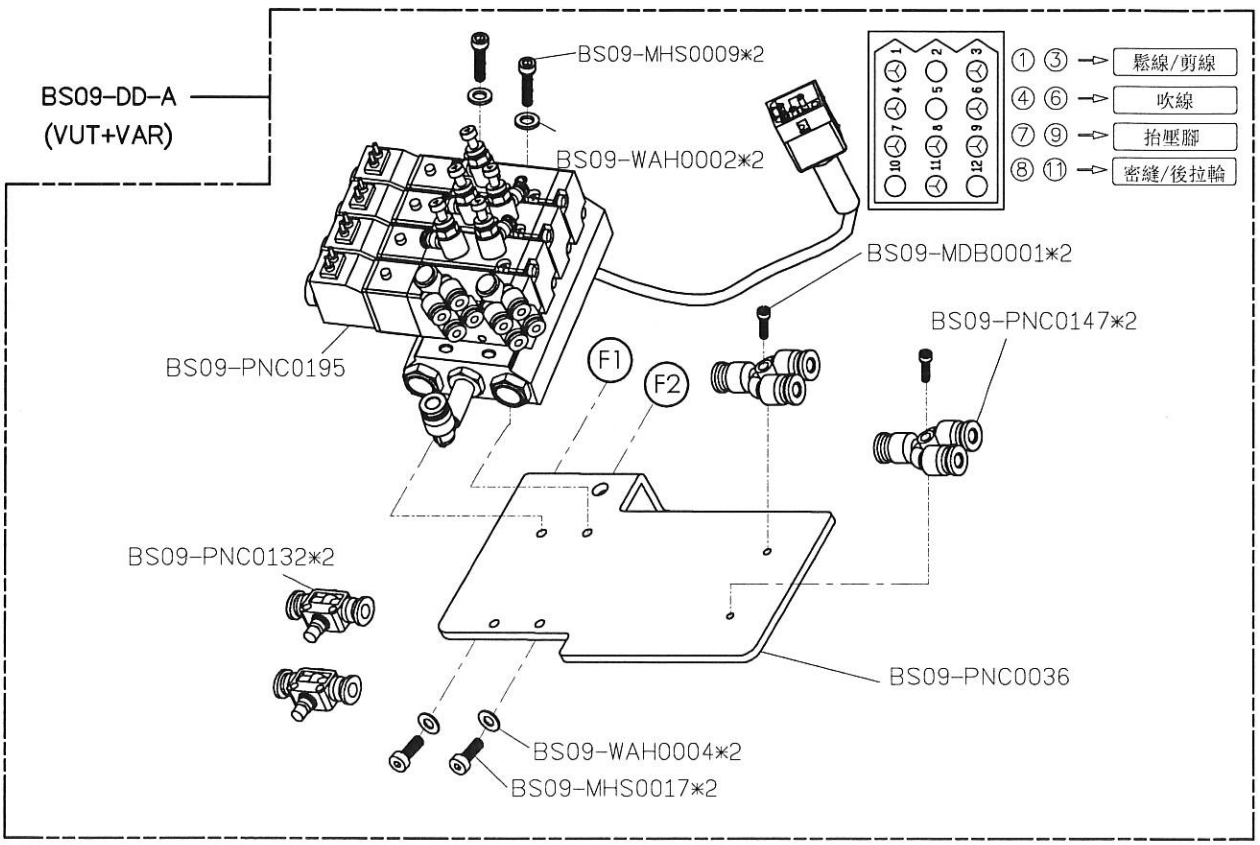

SIRUBA PARTS LIST	Series	Parts Group	Subclass / Remark	Page
	VC008A	VUT		6/10
				Date
				2024/04/16
BX-VUT				

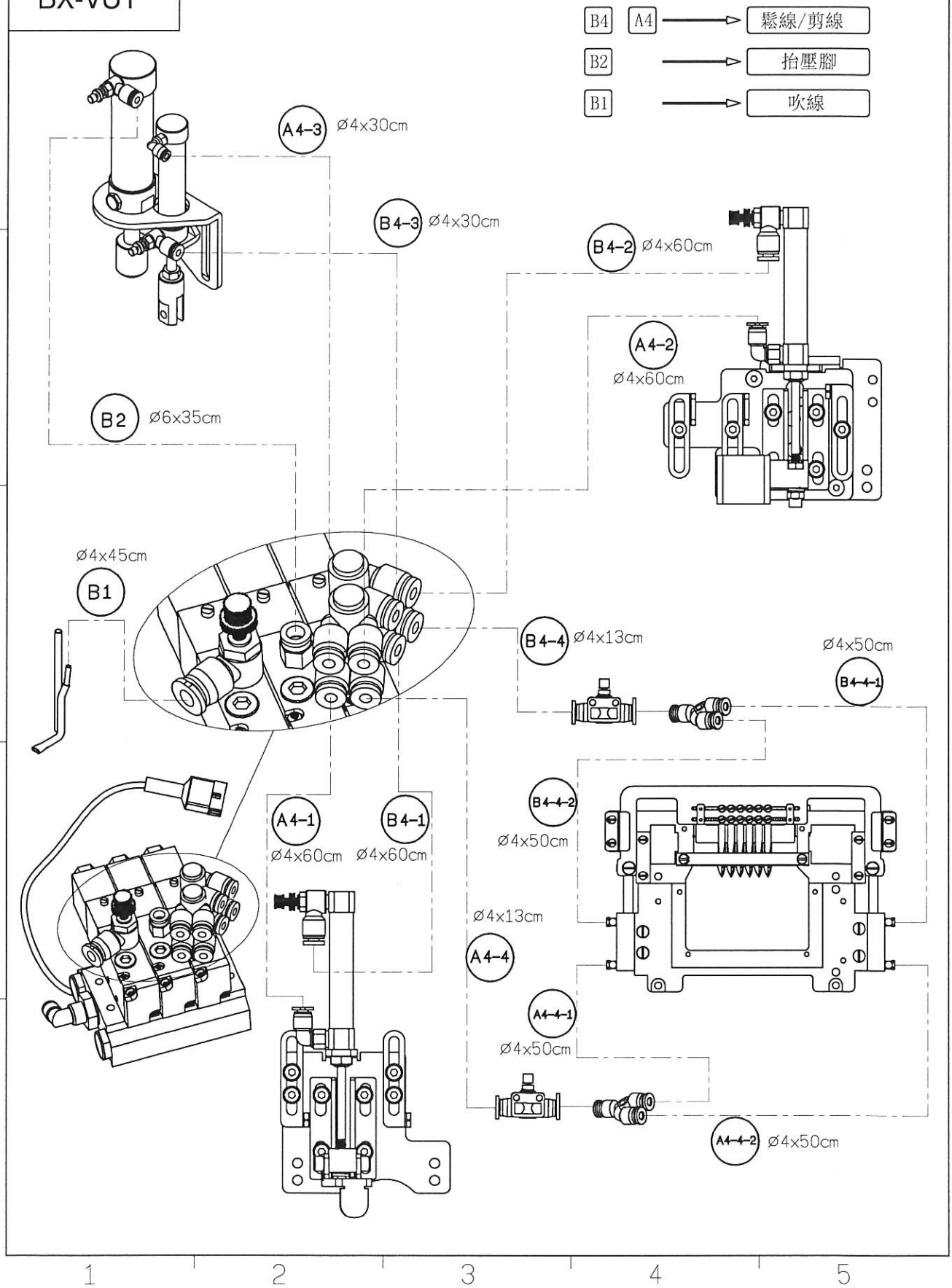

SiRUBA PARTS LIST	Series	Parts Group	Subclass / Remark	Page
	VC008A	VUT	FOR VUT+VAR	7/10
				Date
				2024/04/16
BS-VUT				

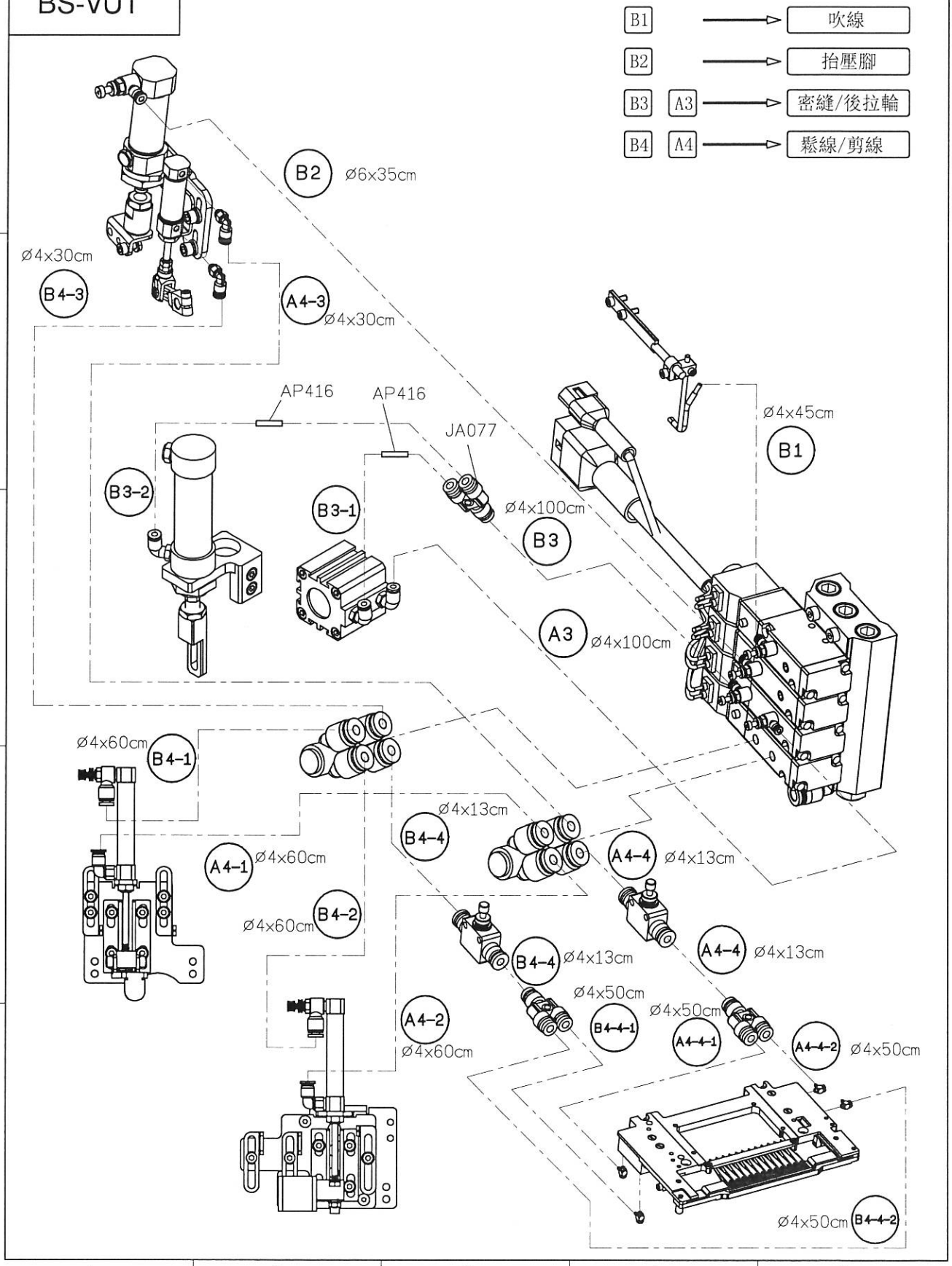

SiRUBA PARTS LIST	Series	Parts Group	Subclass / Remark	Page
	VC008A	VUT	永輝興直驅馬達	8/10
				Date
				2024/04/16
BS-VUT				

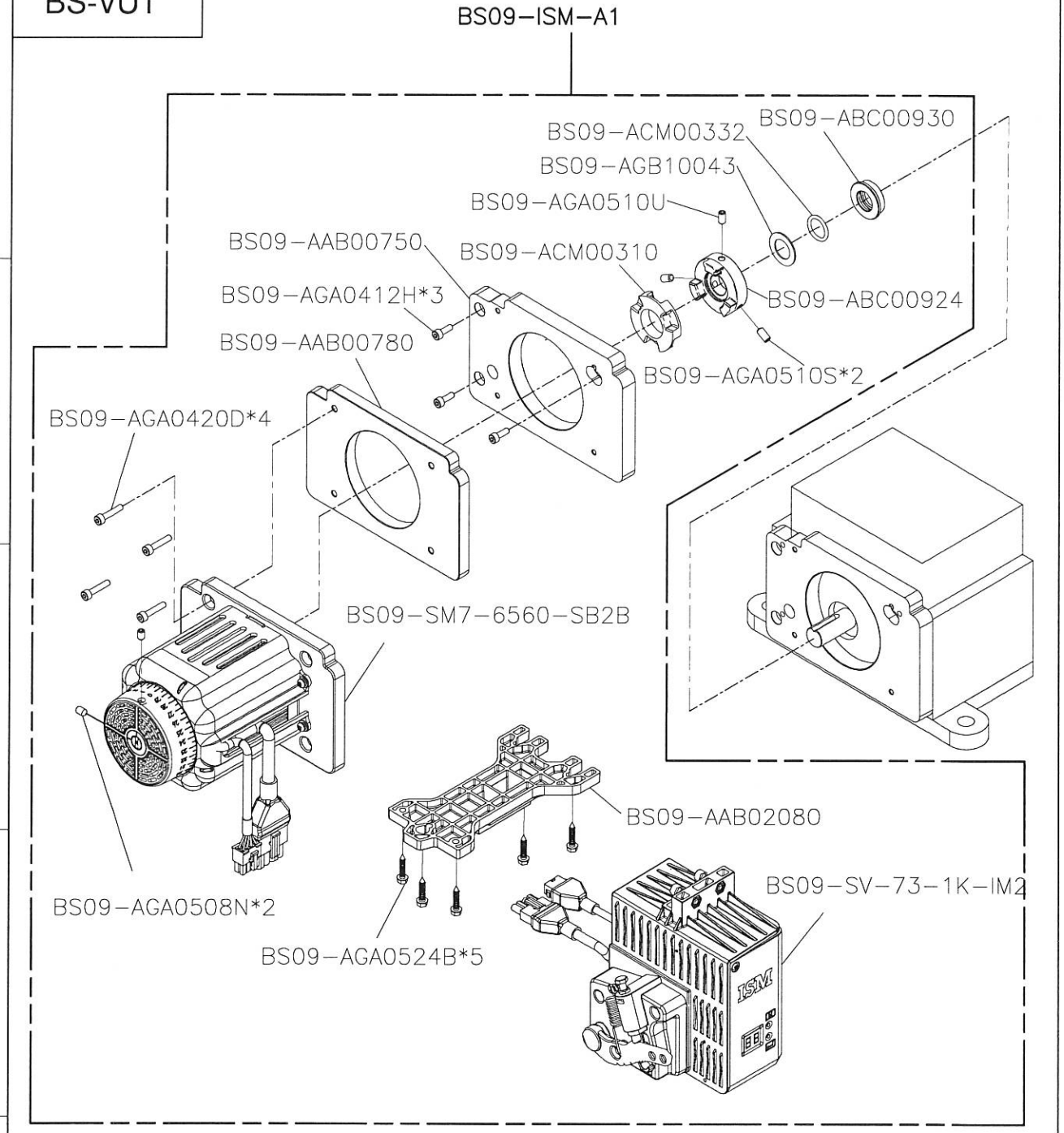

註: ⊕表示公 PIN, ○表示母 PIN

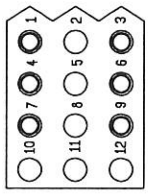

① ③ → 鬆線/剪線

④ ⑥ → 吹線

⑦ ⑨ → 抬壓腳

SIRUBA PARTS LIST	Series	Parts Group	Subclass / Remark	Page
	VC008A	VUT	永輝興直驅馬達 FOR VUT+VAR	9/10 Date 2024/04/16

BS-VUT

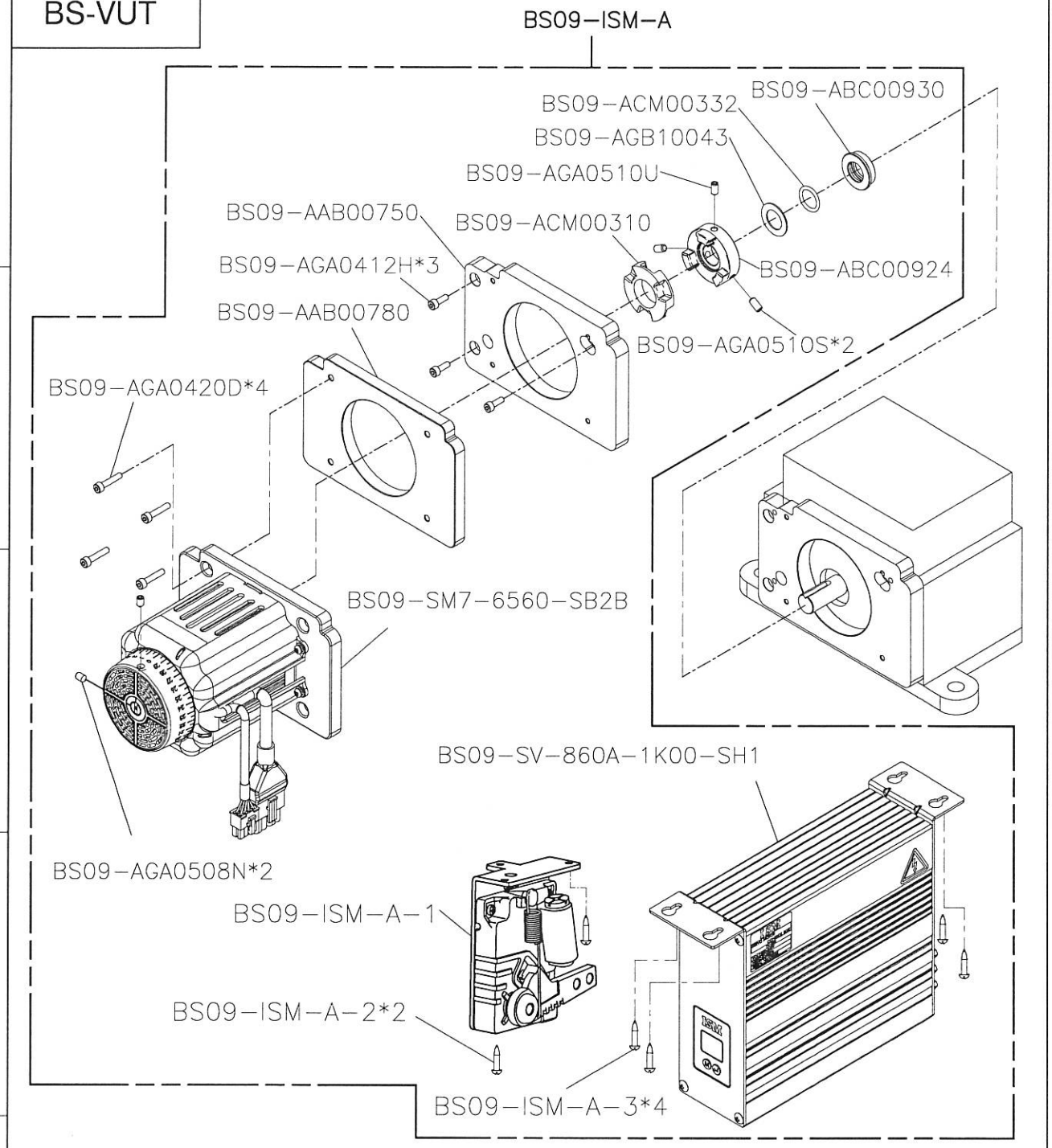

註: ⊕表示公 PIN, ○表示母 PIN

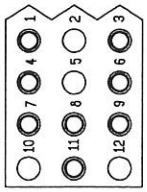

① ③ → 鬆線/剪線

④ ⑥ → 吹線

⑦ ⑨ → 抬壓腳

⑧ ⑪ → 密縫/後拉輪

SiRUBA PARTS LIST	Series	Parts Group	Subclass / Remark	Page
	VC008A	VUT	賀欣直驅馬達	10/10
				Date
				2024/04/16
BS-VUT				

BS09−HS−A

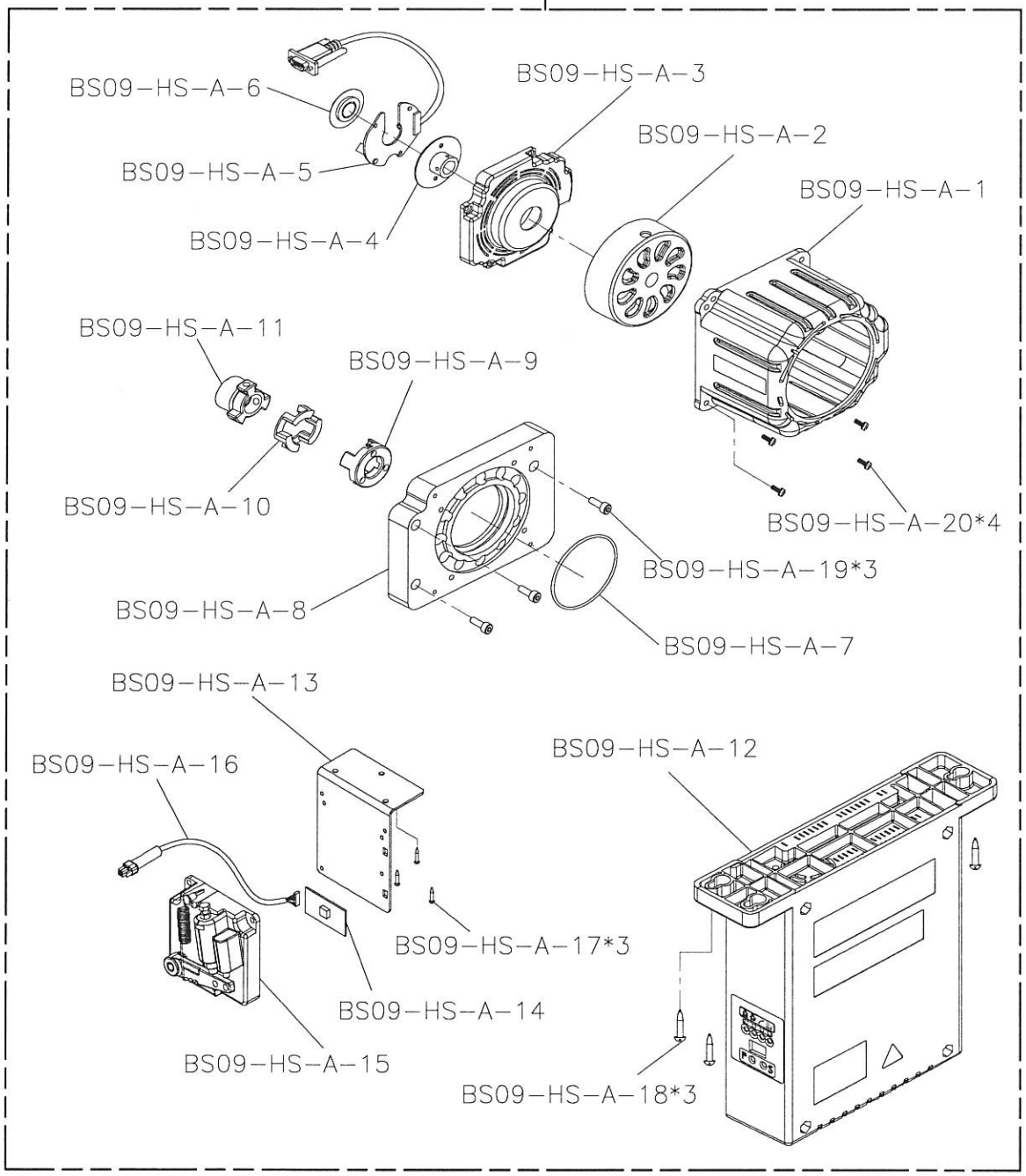

註: ⊕表示公 PIN, ○表示母 PIN

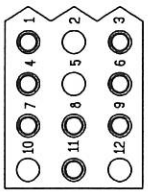

① ③ → 鬆線/剪線

④ ⑥ → 吹線

⑦ ⑨ → 抬壓腳

⑧ ⑪ → 密縫/後拉輪

SIRUBA PARTS LIST	Series	Parts Group	Subclass / Remark	Page
	VC008A	VUT	● Use For 4 NEEDLE	1/10
				Date
				2024/06/26

QX-VUT

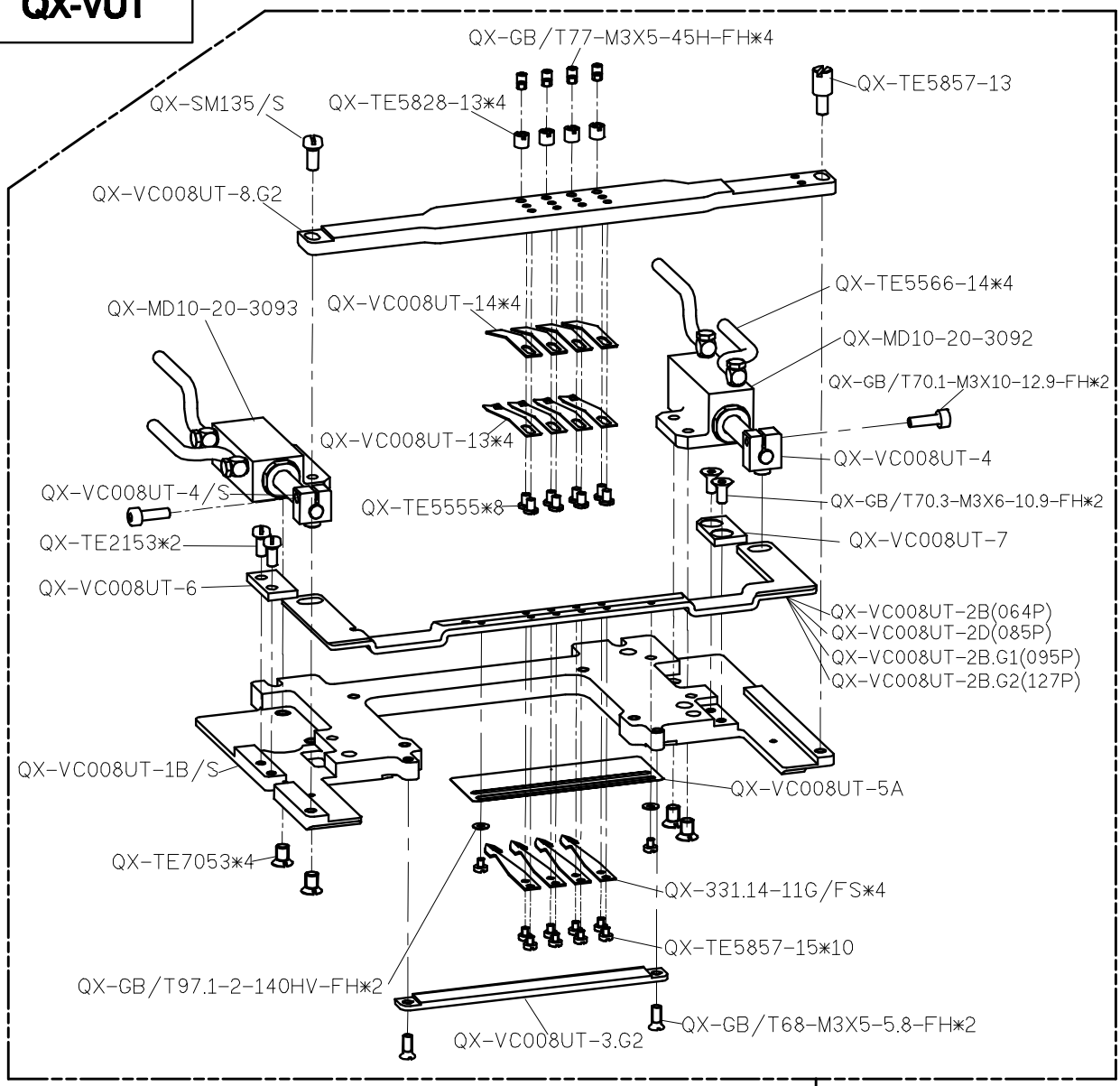

VUT-04064P
VUT-04085P
VUT-04095P
VUT-04127P

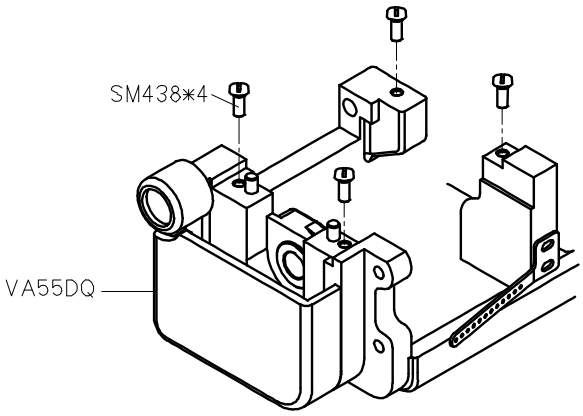

SIRUBA PARTS LIST	Series	Parts Group	Subclass / Remark	Page
	VC008A	VUT	●Use For 6 NEEDLE	2/10
				Date
				2024/06/26

QX-VUT

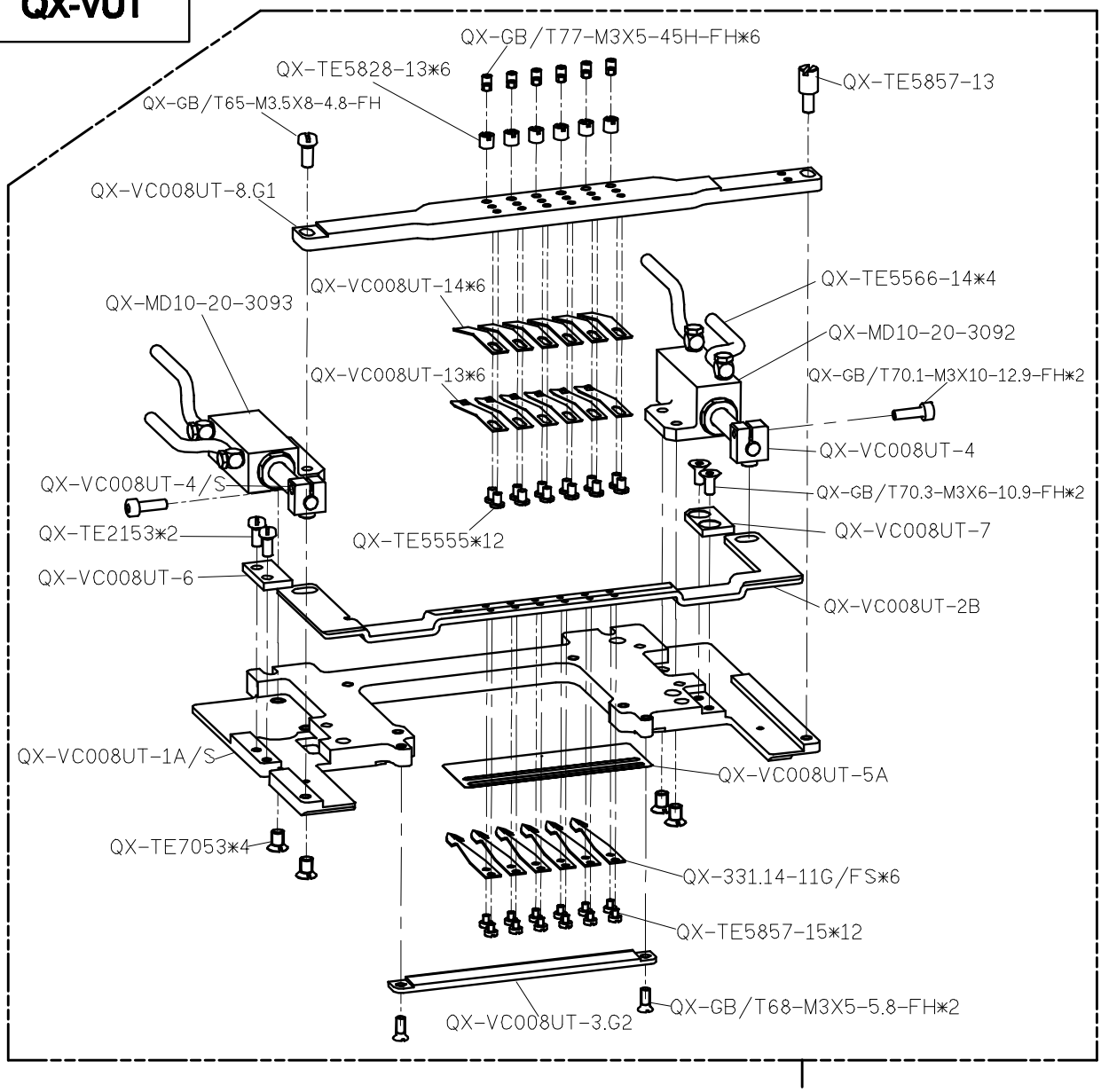

VUT-06064P(1/4")

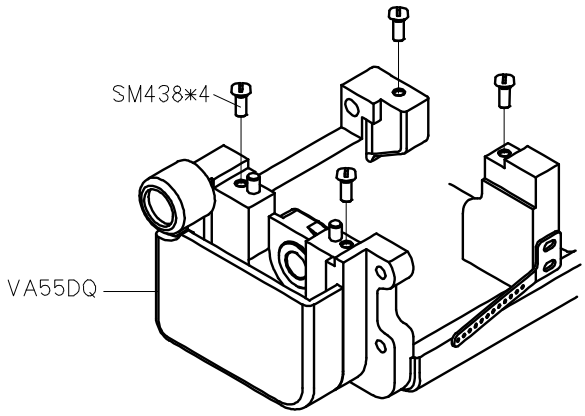

SIRUBA PARTS LIST	Series	Parts Group	Subclass / Remark	Page
	VC008A	VUT	●Use For 12 NEEDLE	3/10
				Date
				2024/06/26

QX-VUT

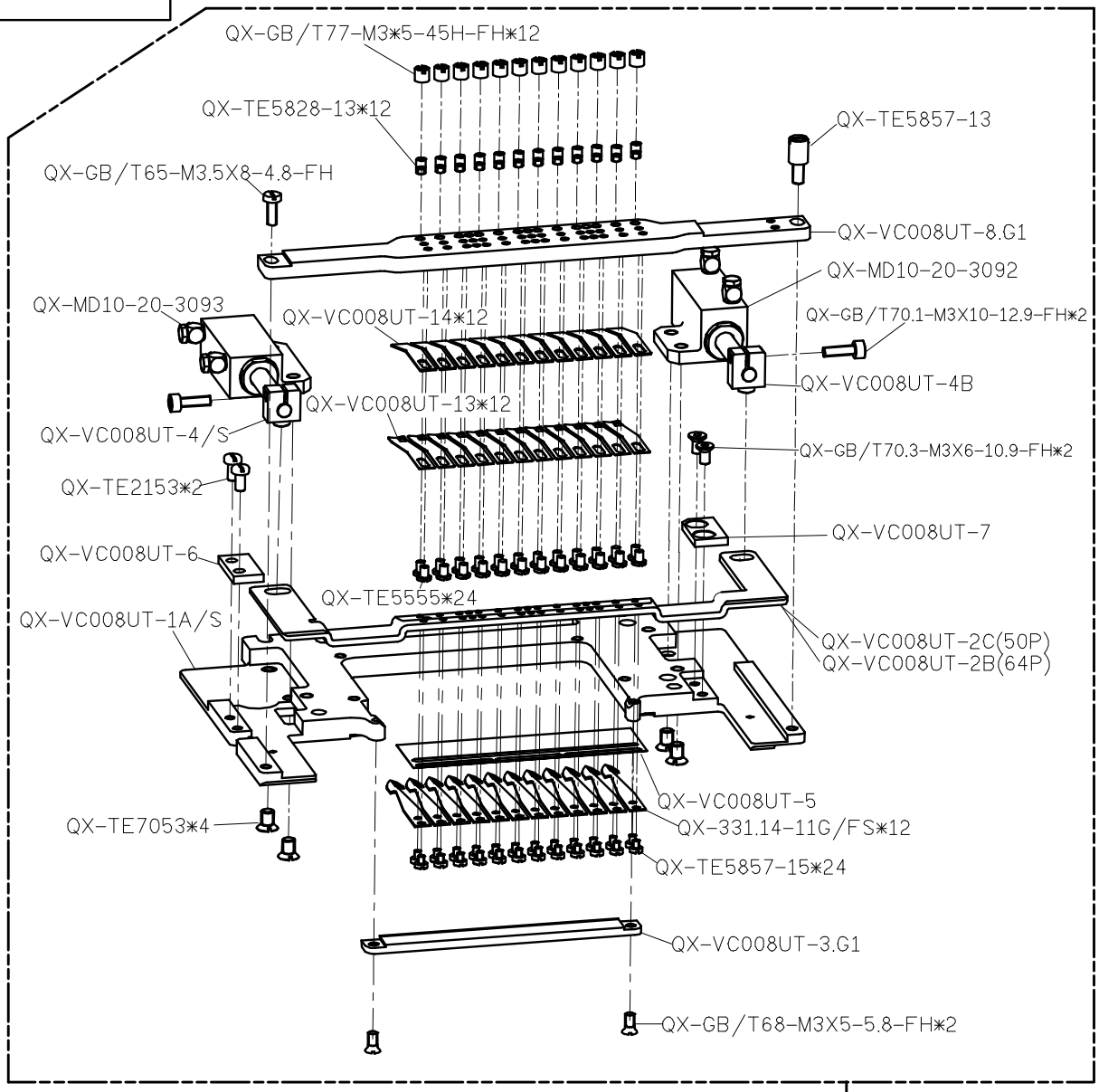

VUT-12048P
VUT-12050P
VUT-12064P

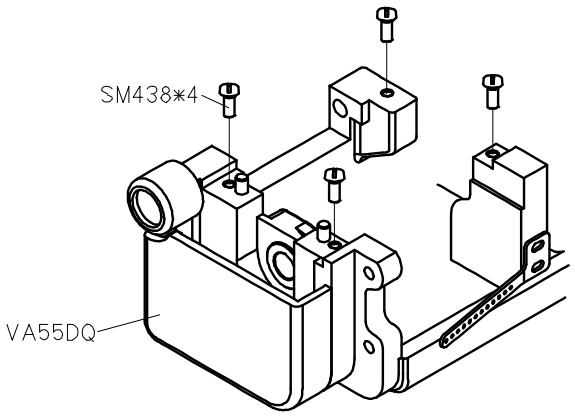

SiRUBA PARTS LIST	Series	Parts Group	Subclass / Remark	Page
	VC008A	VUT	●Use For 13 NEEDLE	4/10
				Date
				2024/11/15

QX-VUT

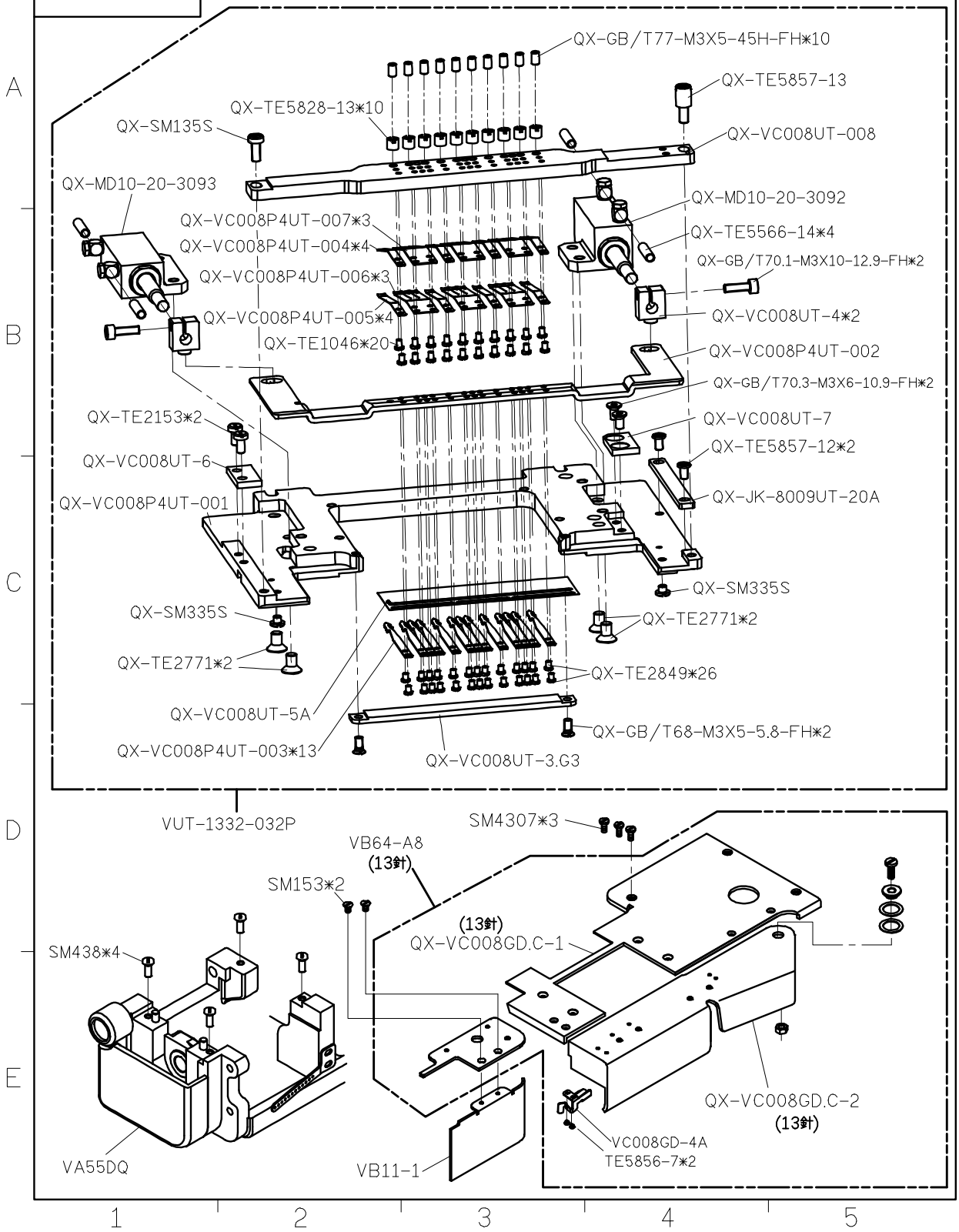

VUT-1332-032P

SiRUBA PARTS LIST	Series	Parts Group	Subclass / Remark	Page
	VC008A	VUT		5/10
				Date
				2024/08/26

QX-VUT

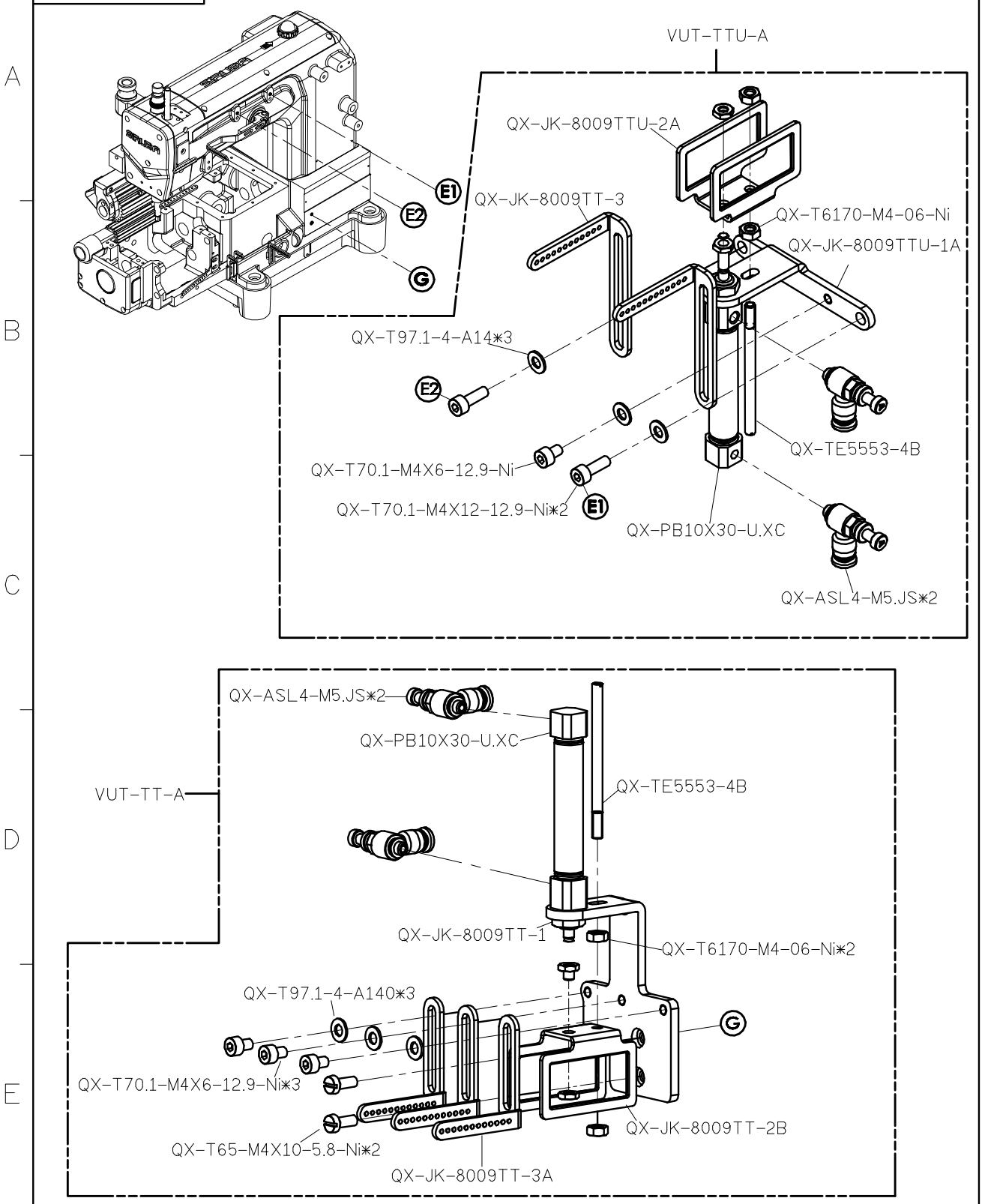

SIRUBA PARTS LIST	Series	Parts Group	Subclass / Remark	Page
	VC008A	VUT		6/10
				Date
				2024/06/26

QX-VUT

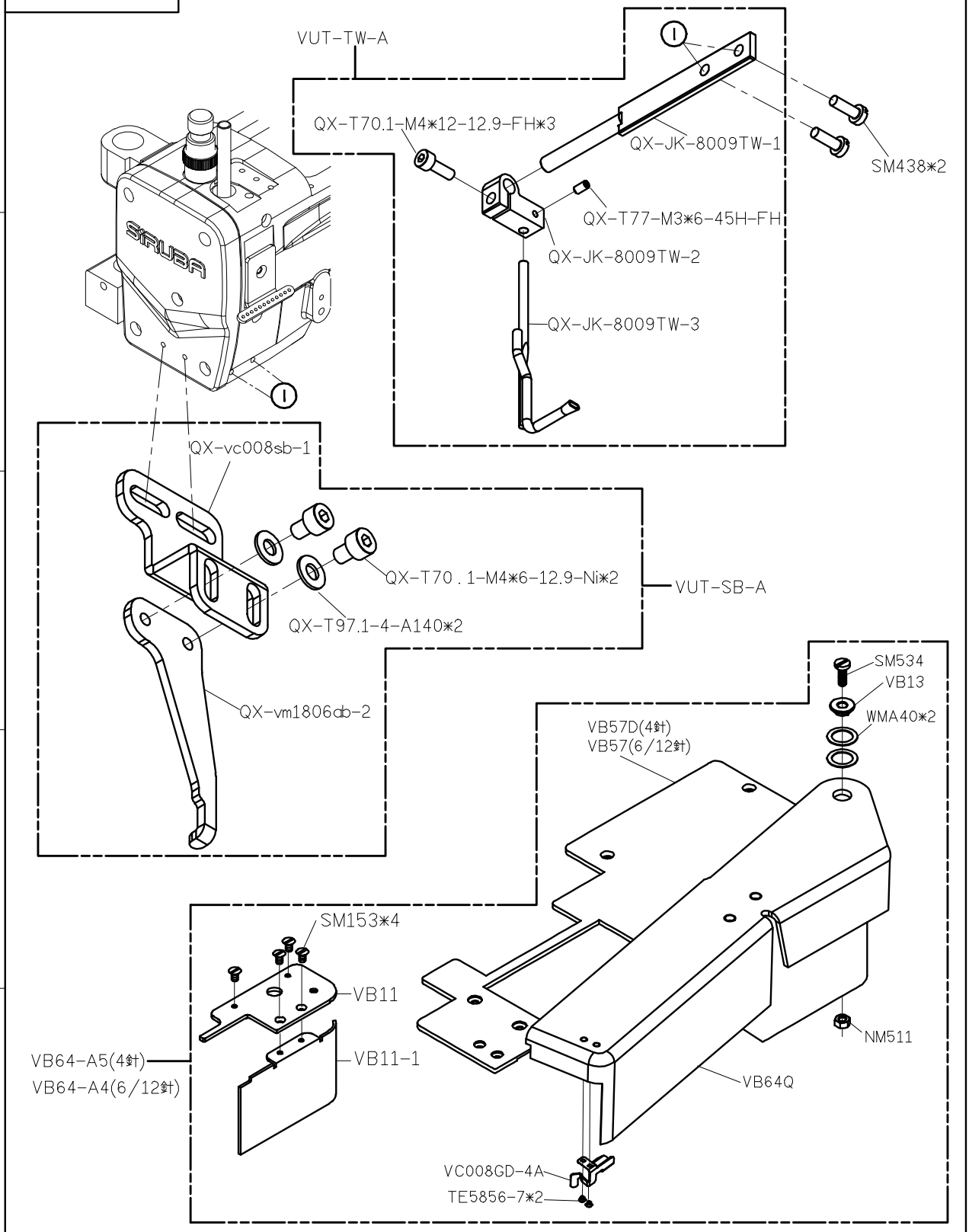

SIRUBA PARTS LIST	Series	Parts Group	Subclass / Remark	Page
	VC008A	VUT		7/10
				Date
				2024/06/26

QX-VUT

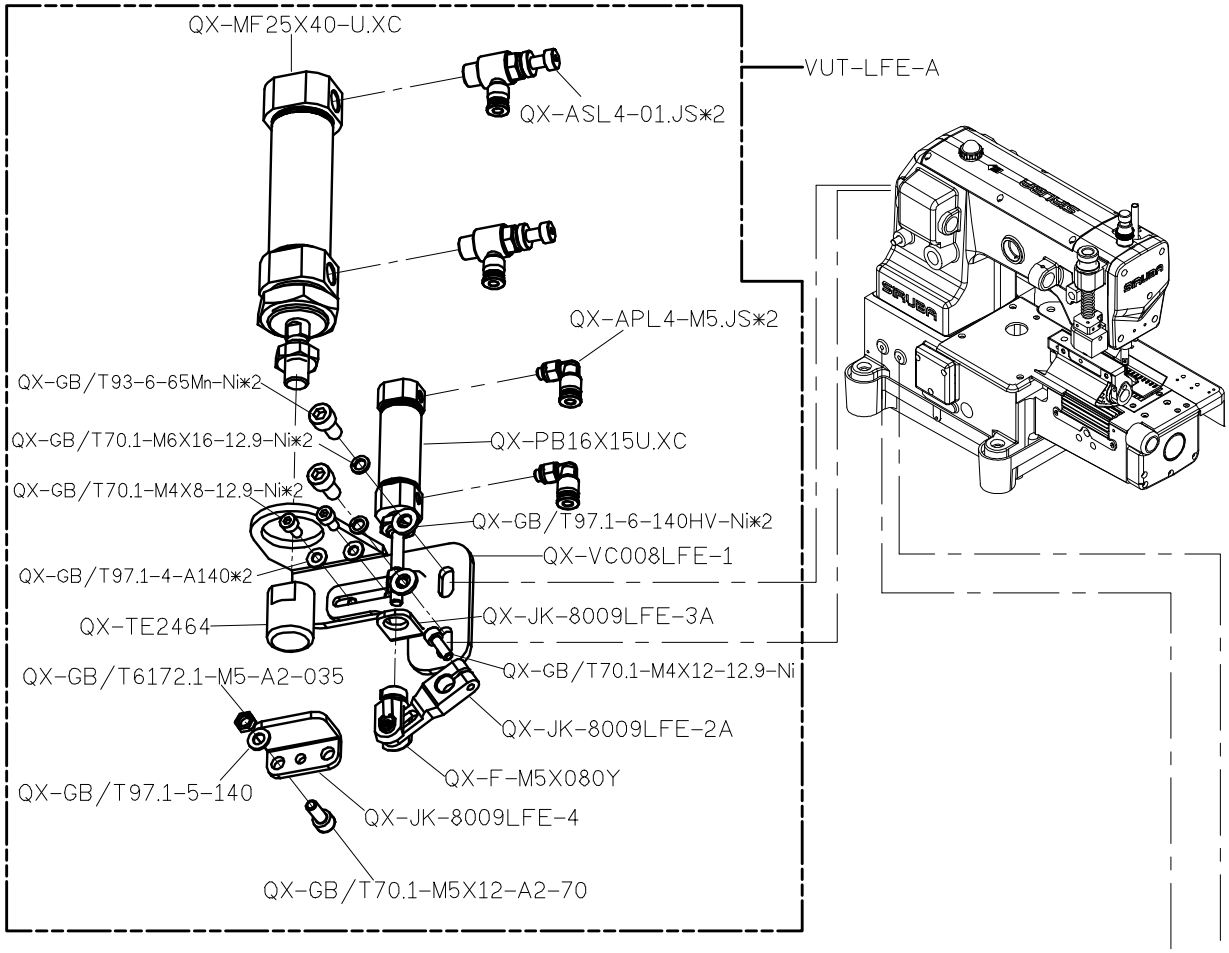

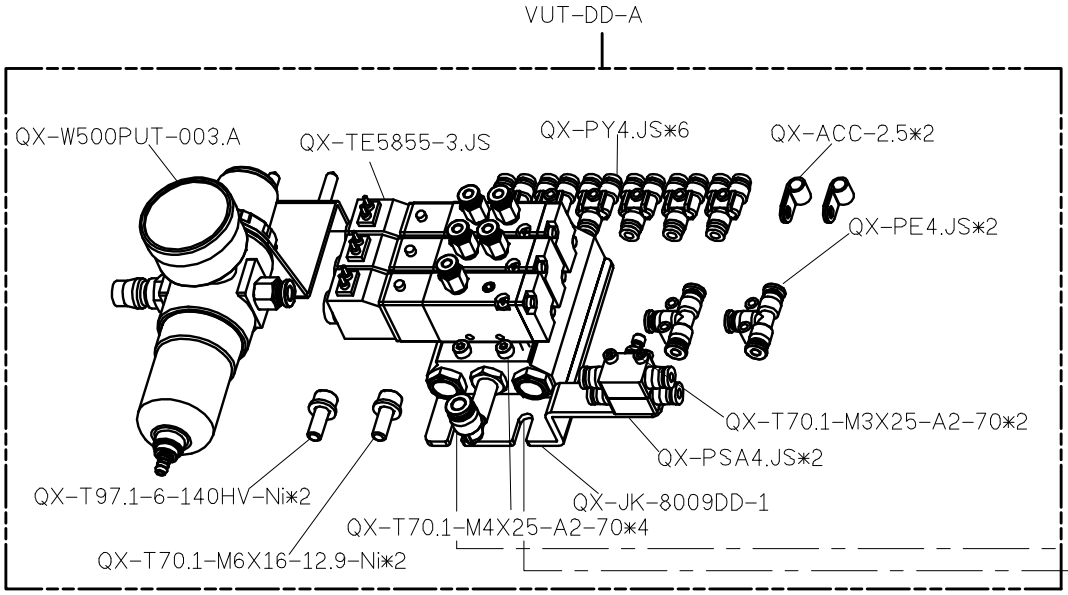

SIRUBA PARTS LIST	Series	Parts Group	Subclass / Remark	Page
	VC008A	VUT		8/10
				Date
				2024/06/26

QX-VUT

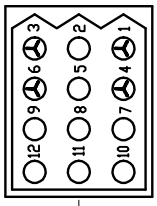

JC150-A

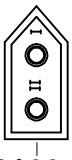

JC300-A

註: ✇表示公 PIN, ◯表示母 PIN

A1	B1	→	抬壓腳
A2	B2	→	鬆線/剪線
	B3	→	吹氣

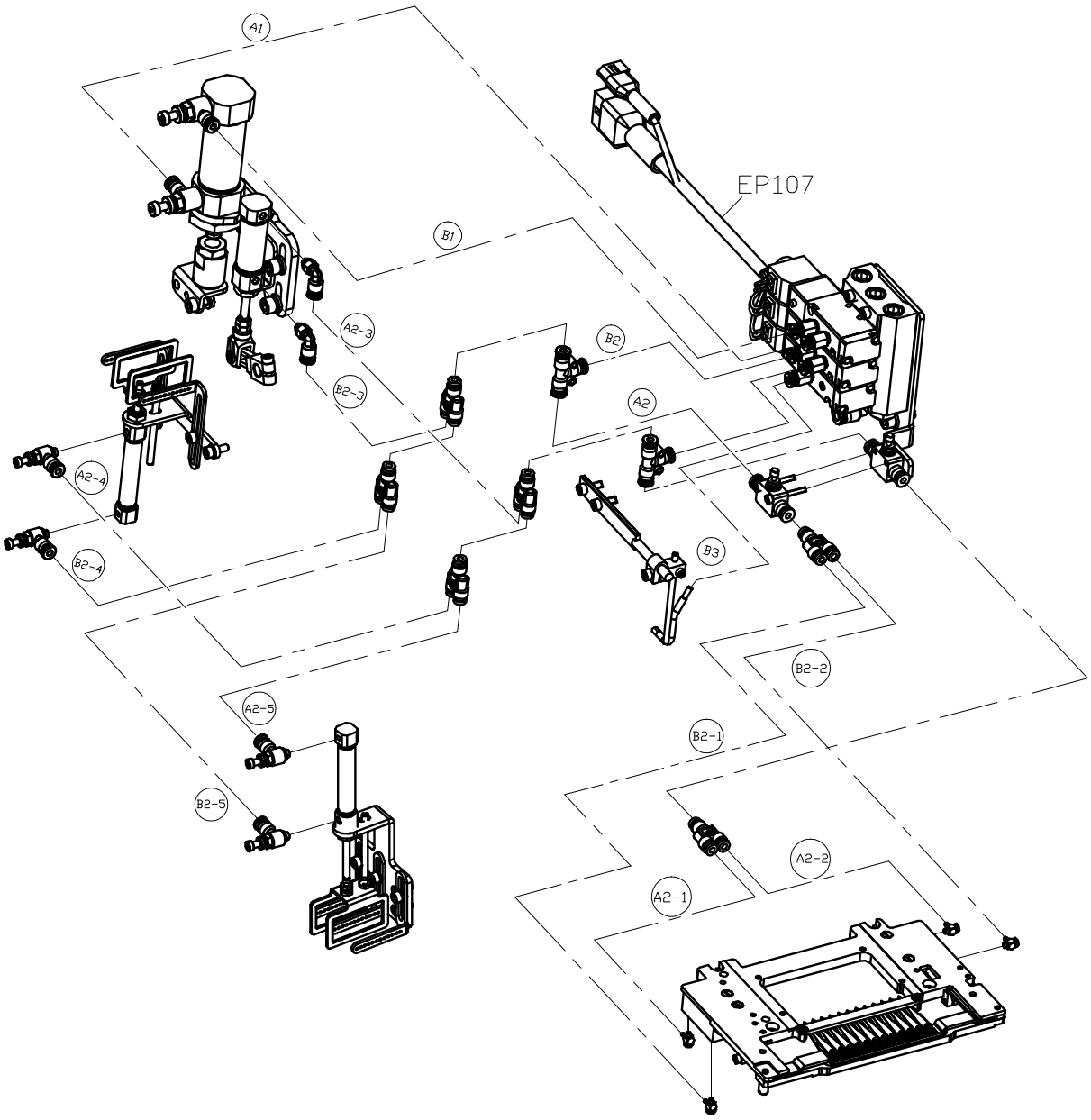

SiRUBA PARTS LIST	Series	Parts Group	Subclass / Remark	Page
	VC008A	VUT	●Use For VAR	9/10
				Date
				2024/06/26

QX-VUT

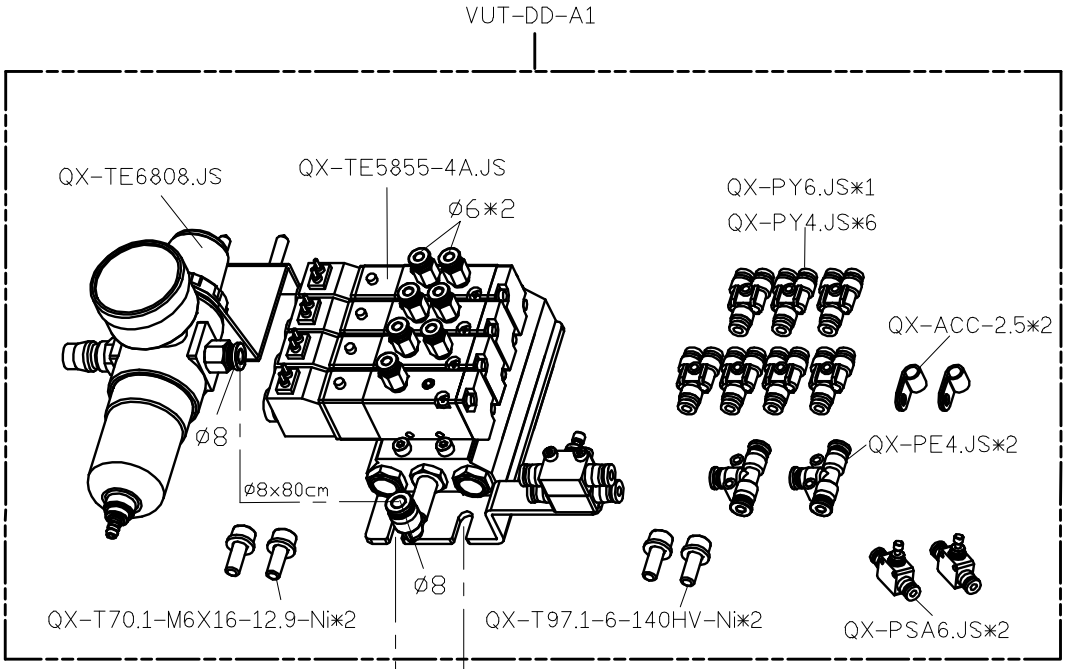

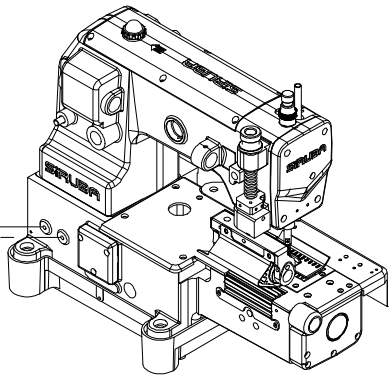

SiRUBA PARTS LIST	Series	Parts Group	Subclass / Remark	Page
	VC008A/B	VUT	●Use For VAR	10/10
				Date
				2024/06/26
QX-VUT				

B1	A1	→	密縫/後拉輪	←	2 5
B2	A2	→	抬壓腳	←	I II
B3	A3	→	綣線/剪線	←	1 3
B4		→	吹气	←	4 6

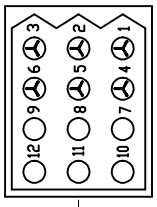

JC150-A

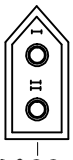

JC300-A
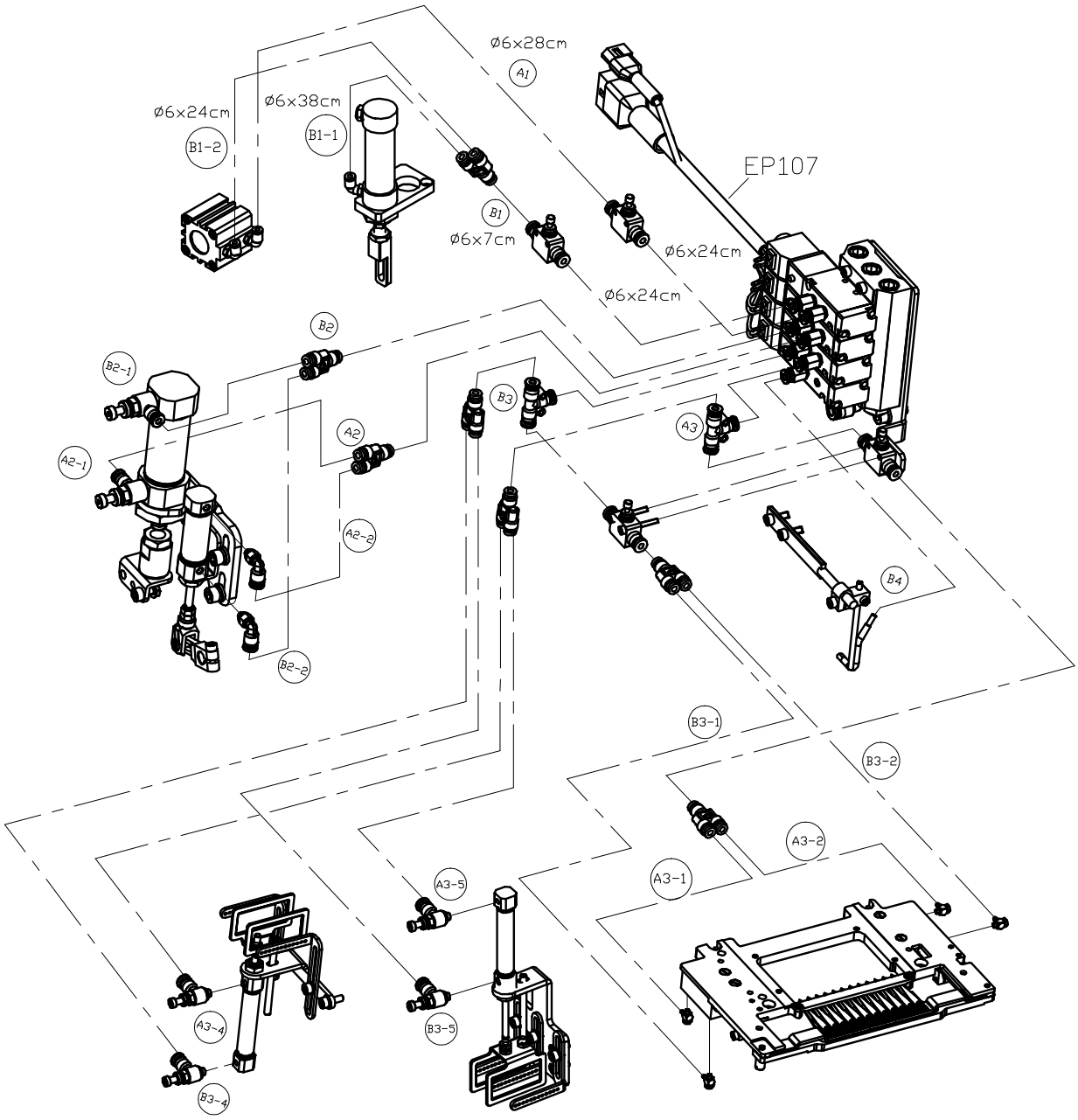
註: ✇表示公 PIN,◯表示母 PIN