SIRUBA PARTS LIST	Series	Parts Group	Subclass / Remark	Page
	700L	BK-KJ		1/1
				Date
				2018/8/27

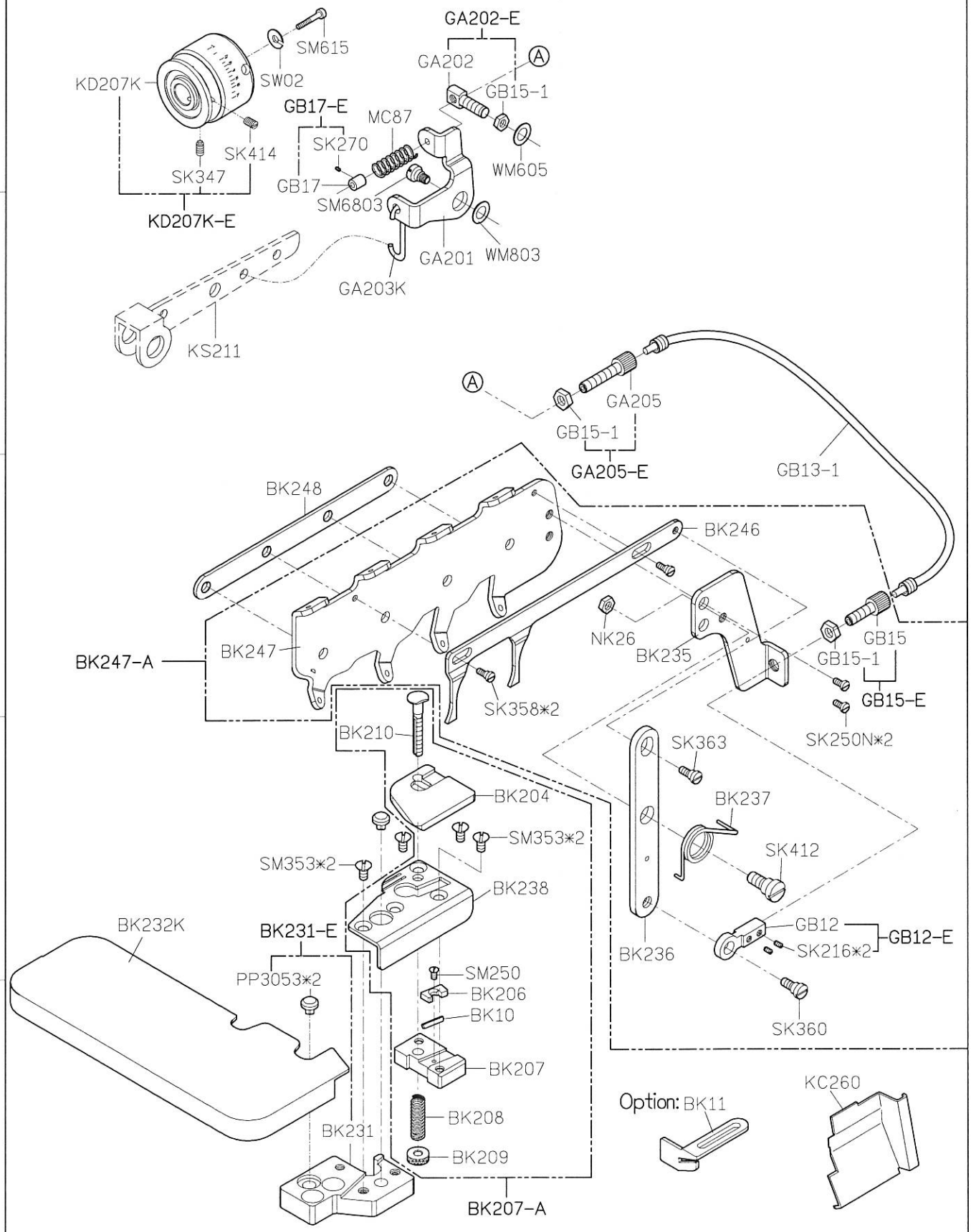

SIRUBA PARTS LIST	Series	Parts Group	Subclass / Remark	Page
	700L	BK-1KJ		1/1
				Date
				2018/8/27

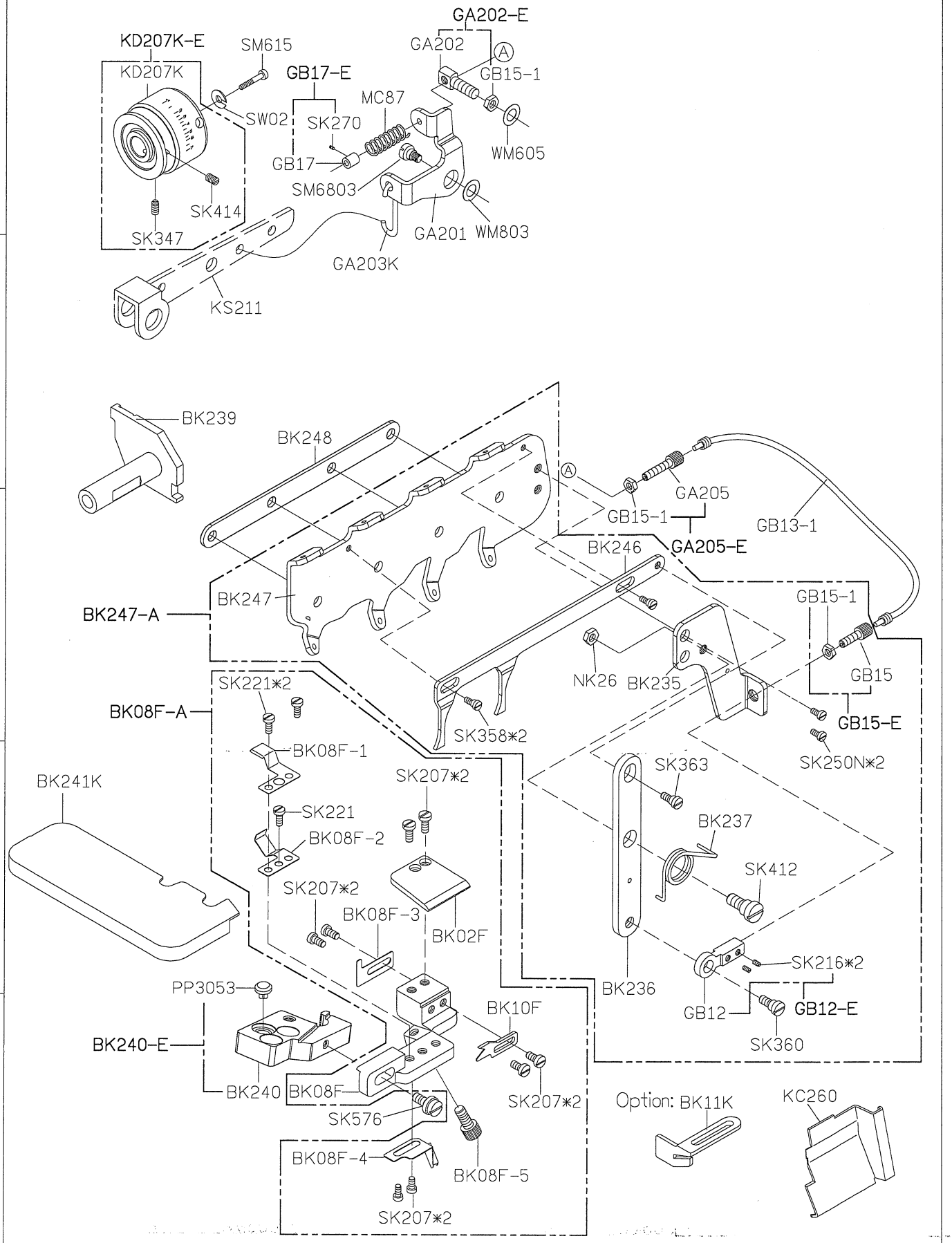

SIRUBA PARTS LIST	Series	Parts Group	Subclass / Remark	Page
	700L	BKF	For 737L	1/11
				Date
				2022/01/11

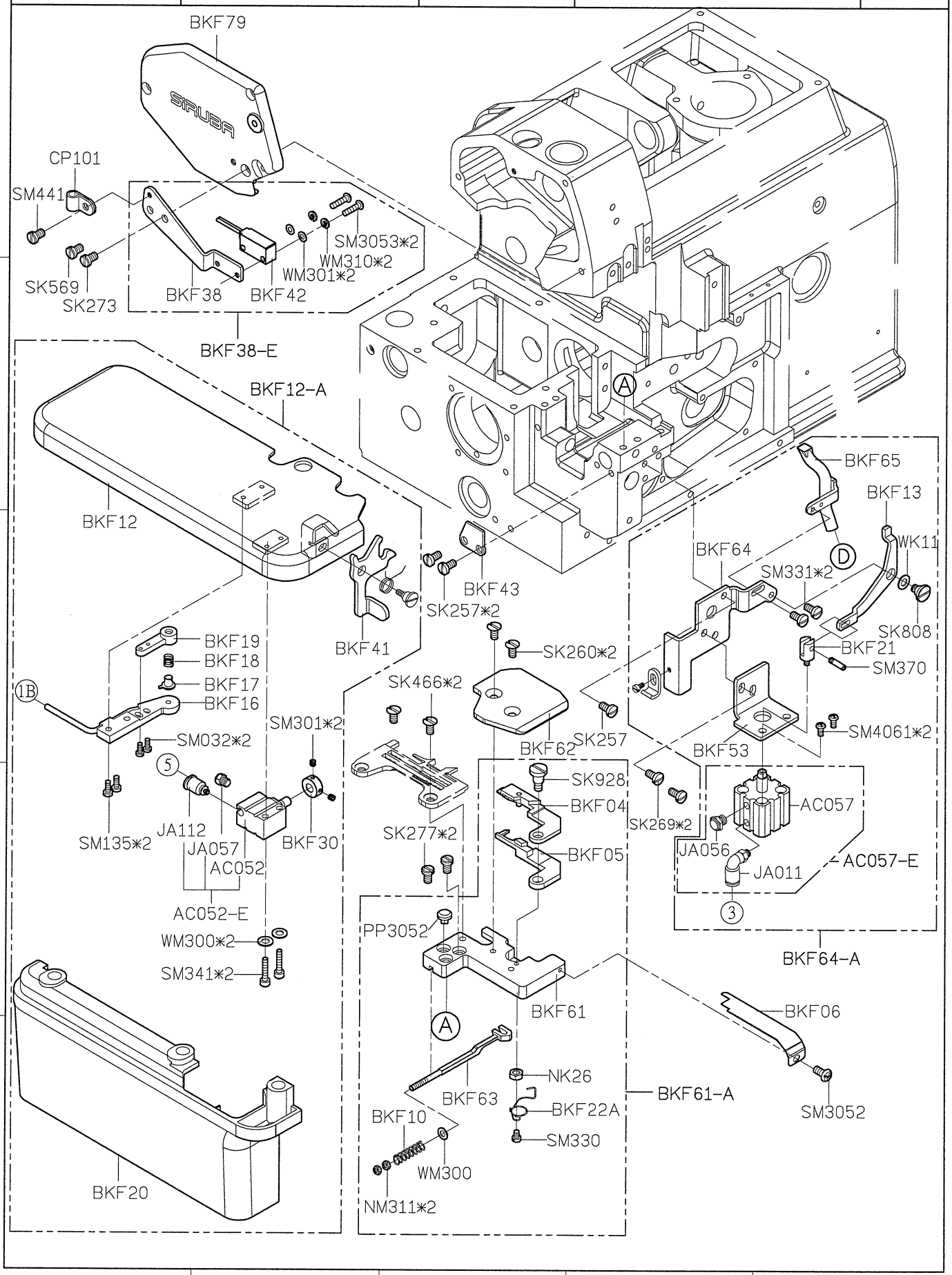

SIRUBA PARTS LIST	Series	Parts Group	Subclass / Remark	Page
	700L	BKF	For 747L	2/11
				Date
				2022/01/11

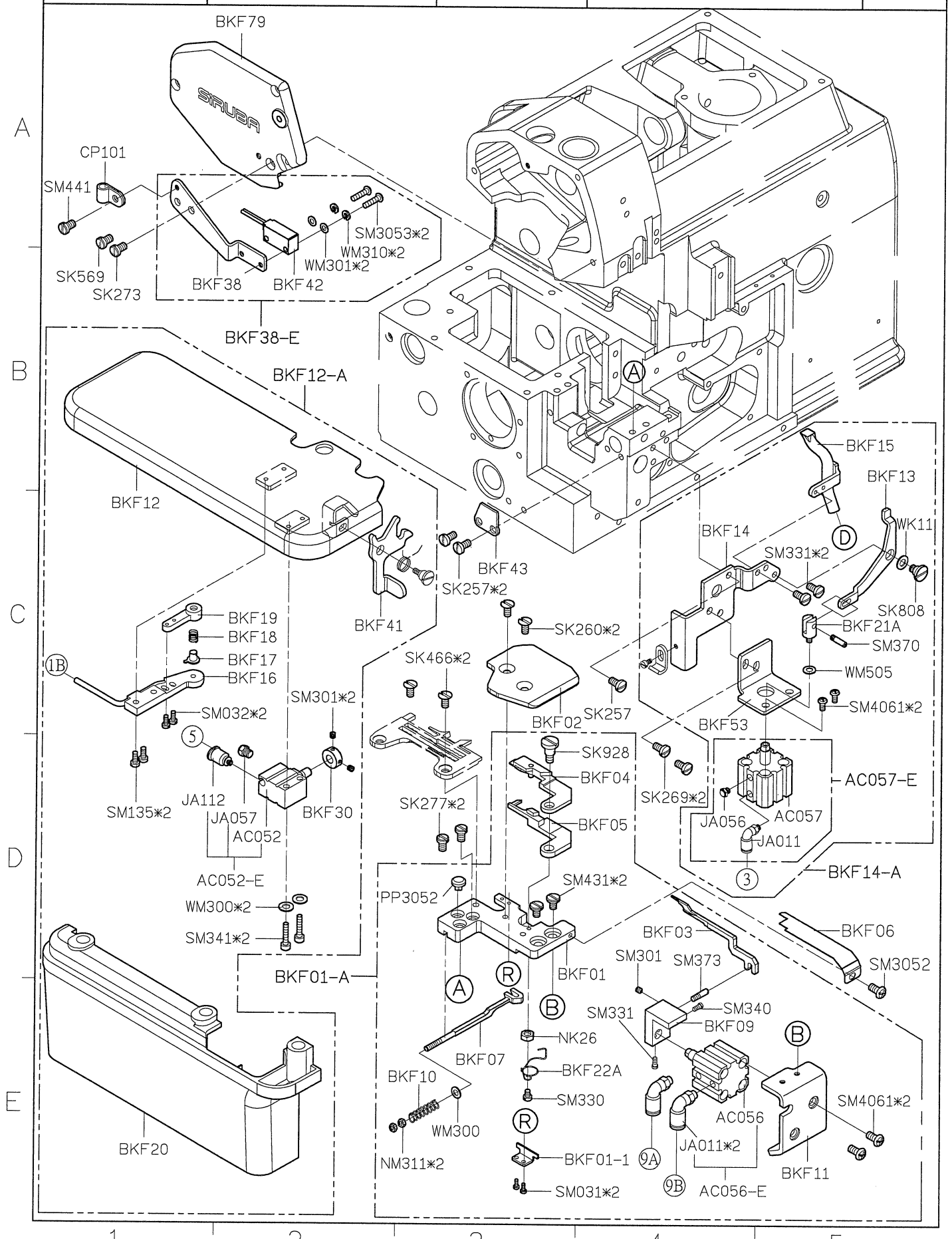

SIRUBA PARTS LIST	Series	Parts Group	Subclass / Remark	Page
	700L	BKF	# For 737L	3/11
				Date
				2022/06/16

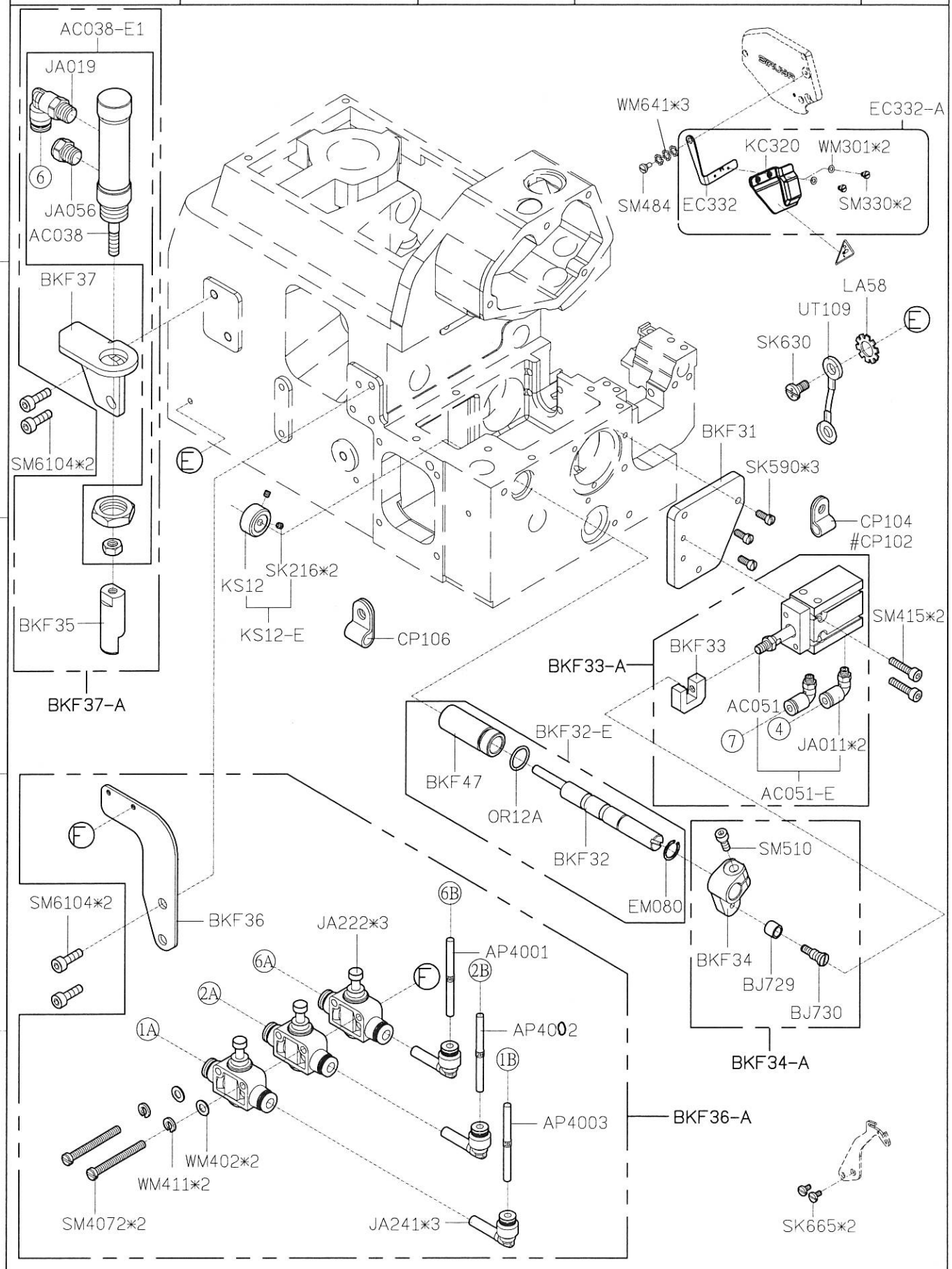

SIRUBA PARTS LIST	Series	Parts Group	Subclass / Remark	Page
	700L	BKF	* For 747L	4/11
				Date
				2022/06/16

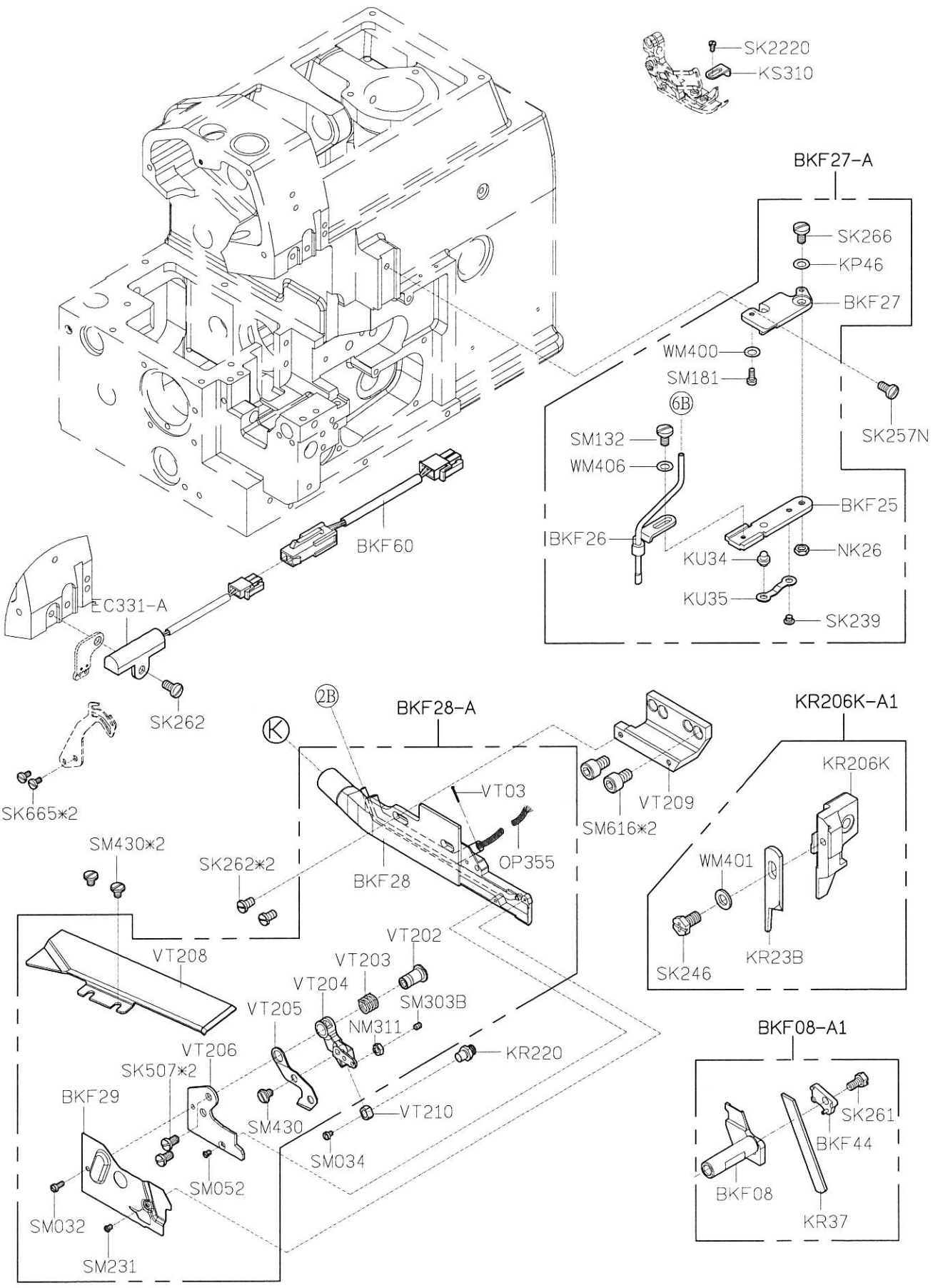

A B C D E

1 2 3 4 5

SiRUBA PARTS LIST	Series	Parts Group	Subclass / Remark	Page
	700L	BKF	For 737L	5/11
				Date
				2022/08/04

KC201L-B3

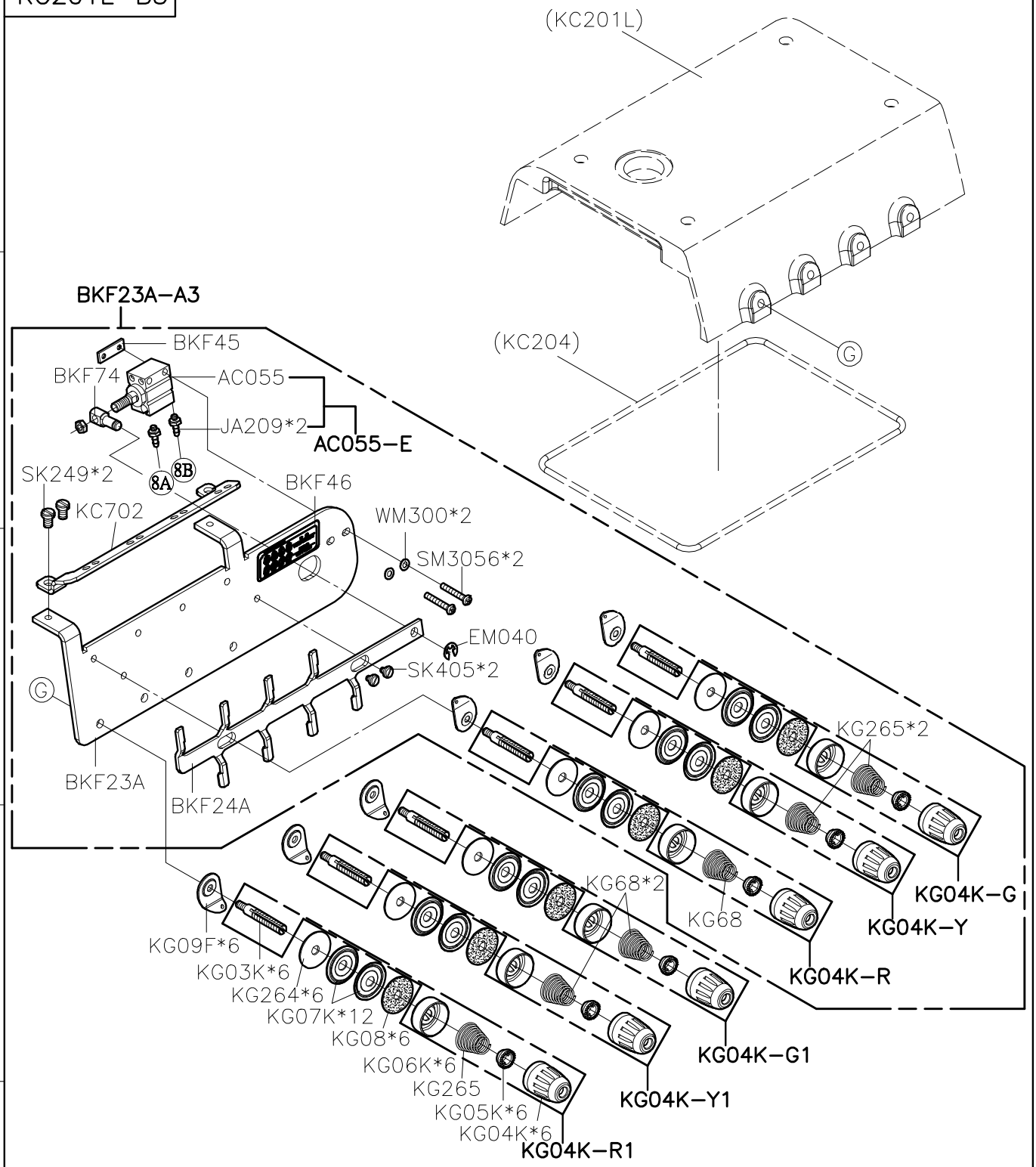

SiRUBA PARTS LIST	Series	Parts Group	Subclass / Remark	Page
	700L	BKF	For 747L	6/11
				Date
				2022/08/04

KC201L-B4

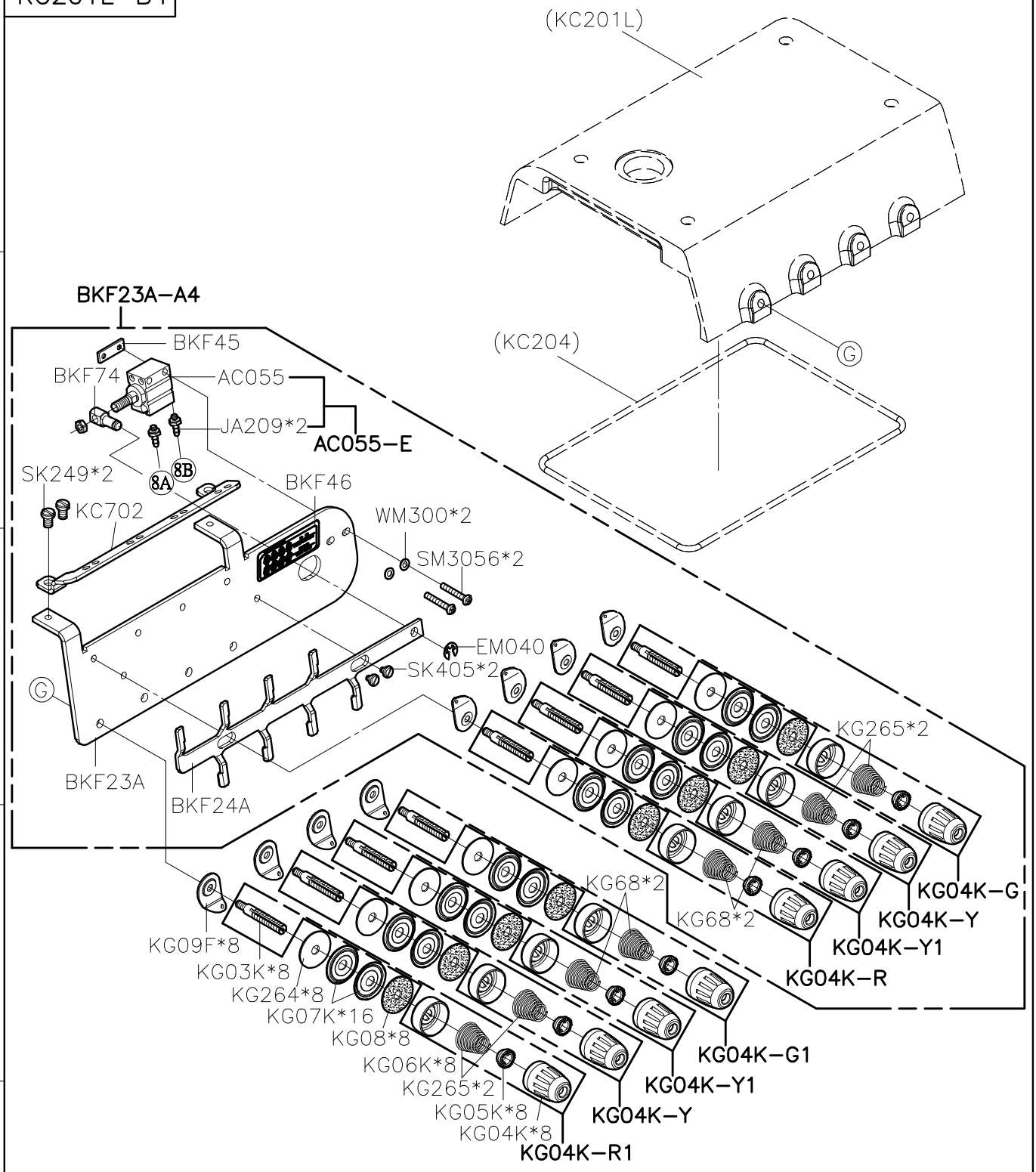

SiRUBA PARTS LIST	Series	Parts Group	Subclass / Remark	Page
	700L	BKF	# For 737L △ For調撥件	7/11
				Date
				2022/05/04

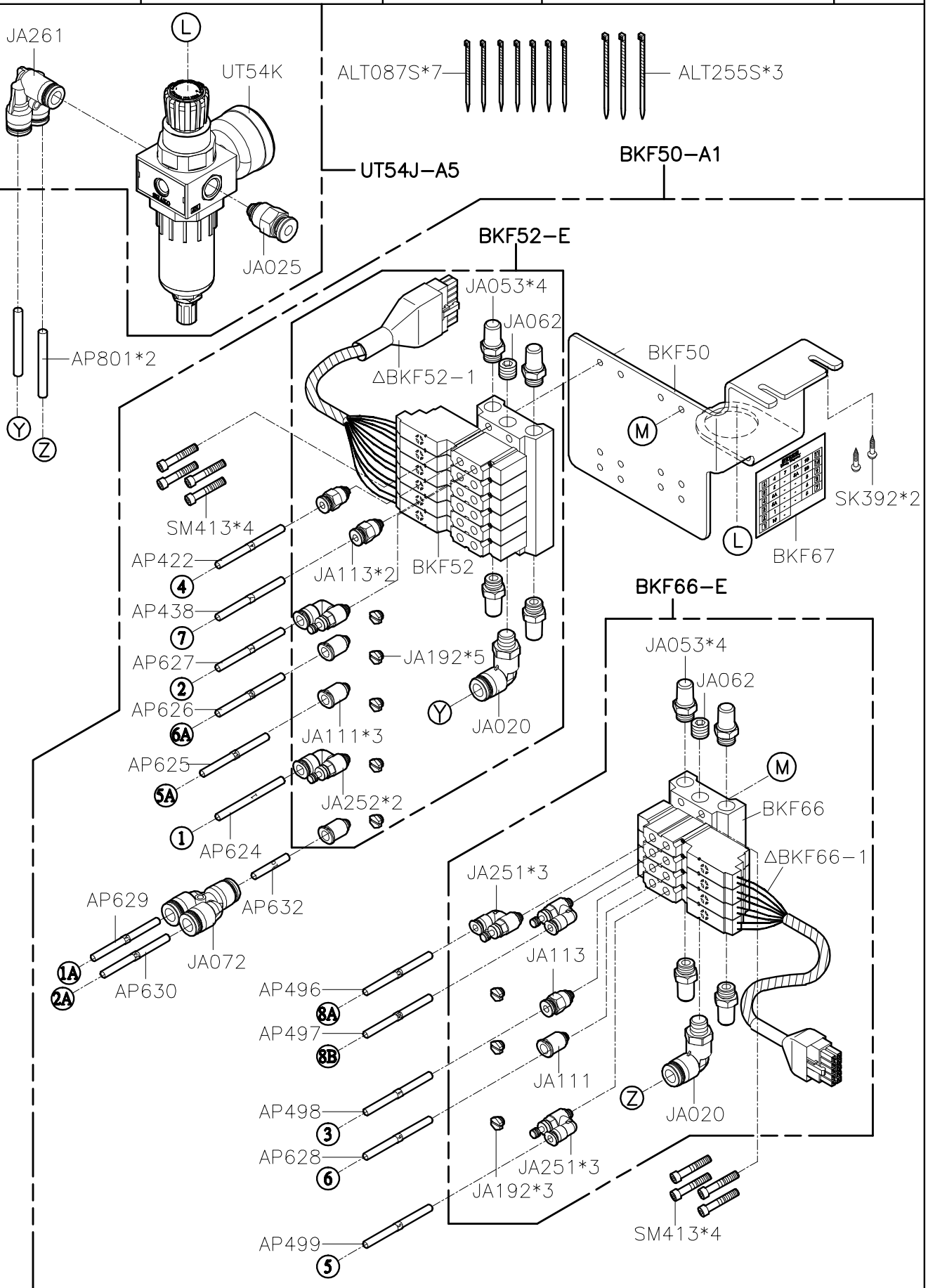

SiRUBA PARTS LIST	Series	Parts Group	Subclass / Remark	Page
	700L	BKF	* For 747L △For調撥件	8/11
				Date
				2022/05/04

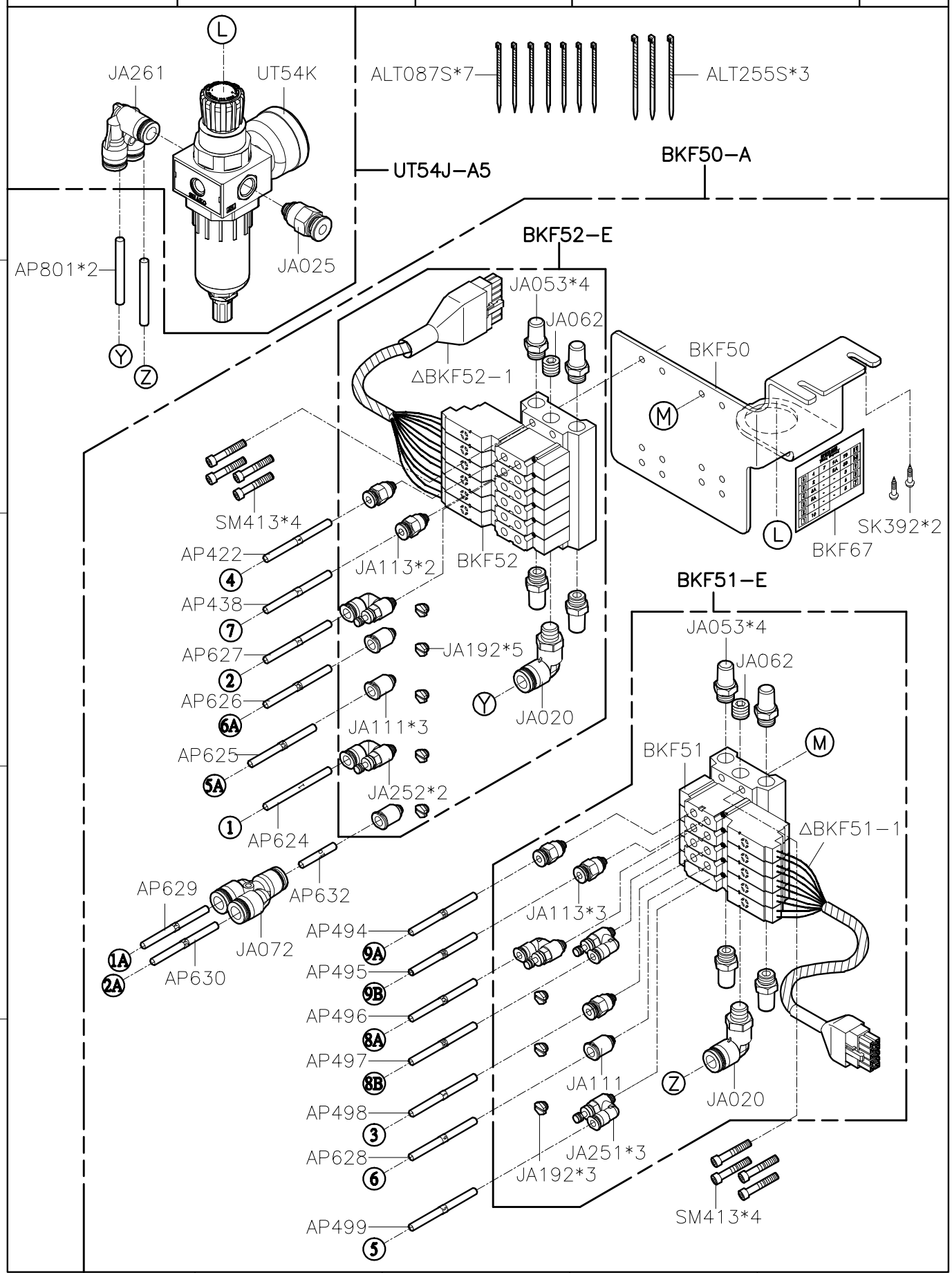

SiRUBA PARTS LIST	Series	Parts Group	Subclass / Remark	Page
	700L	BKF		9/11
				Date
				2022/01/11

DKH301ADN-A
@DKH301ADE-A

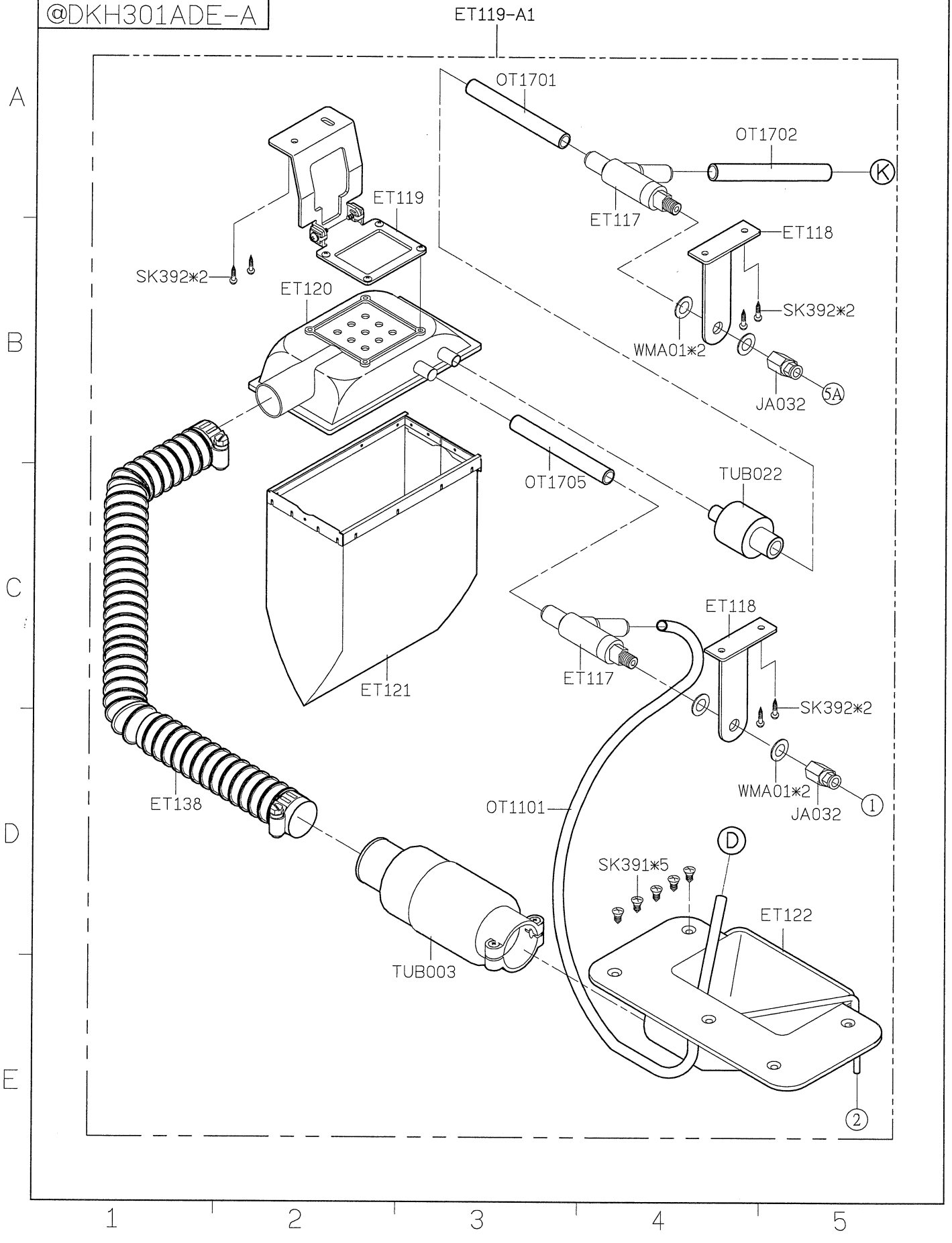

SiRUBA PARTS LIST	Series	Parts Group	Subclass / Remark	Page
	700L	BKF	@For CE	10/11
				Date
				2022/01/11

DKH301ADN-A
@DKH301ADE-A

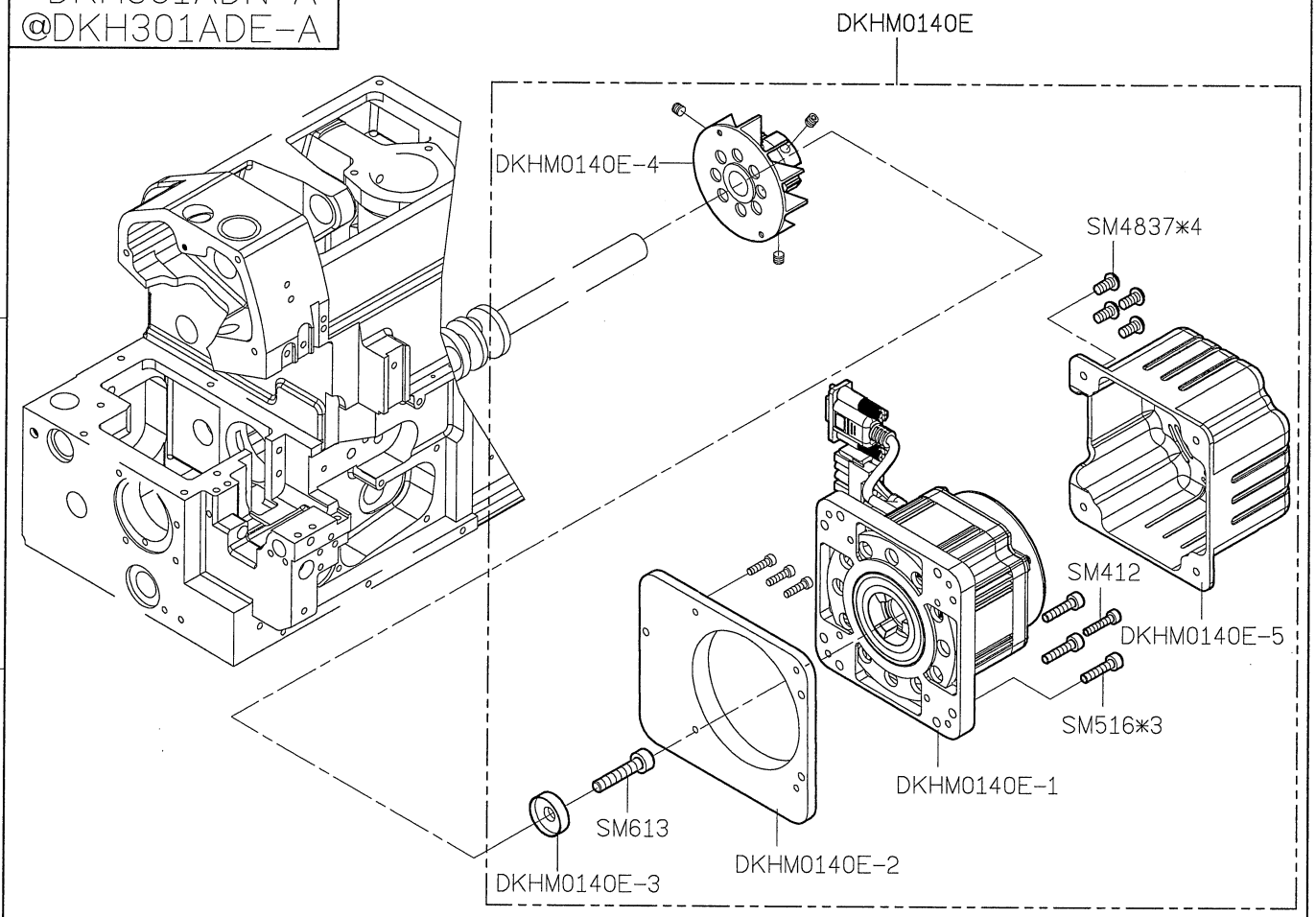

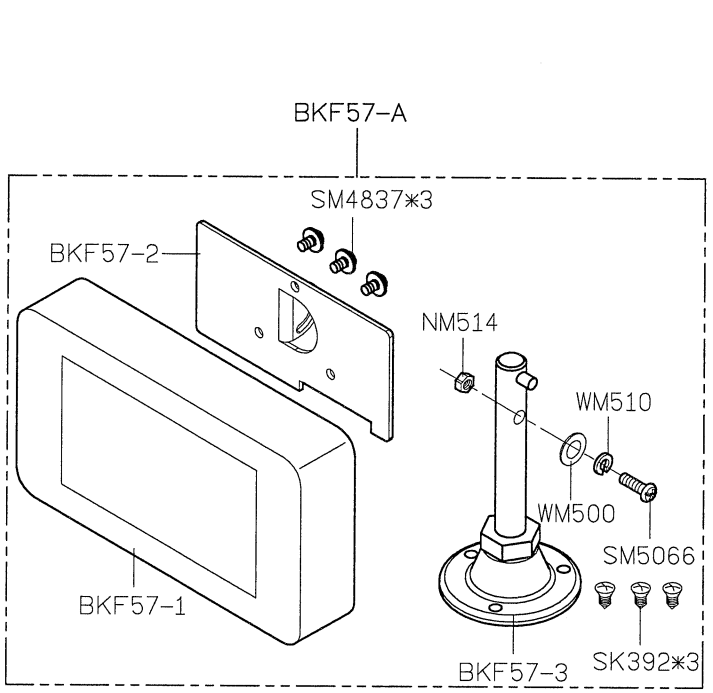

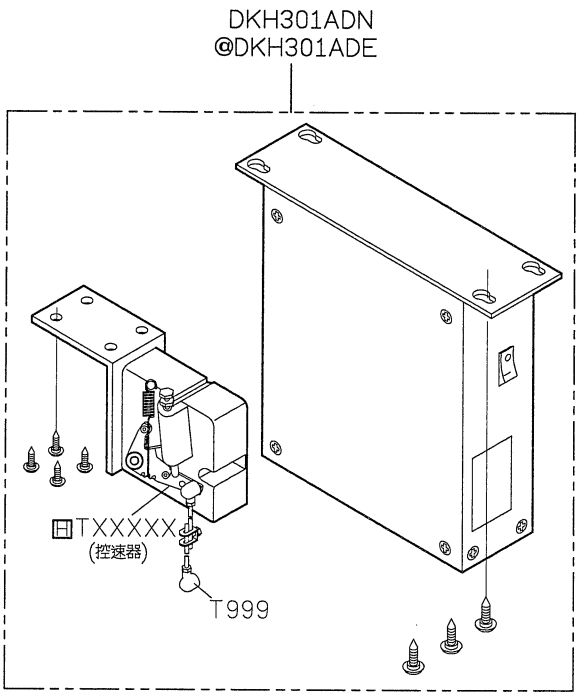

SiRUBA PARTS LIST	Series	Parts Group	Subclass / Remark	Page
	700L	BKF		11/11
				Date
				2022/01/11

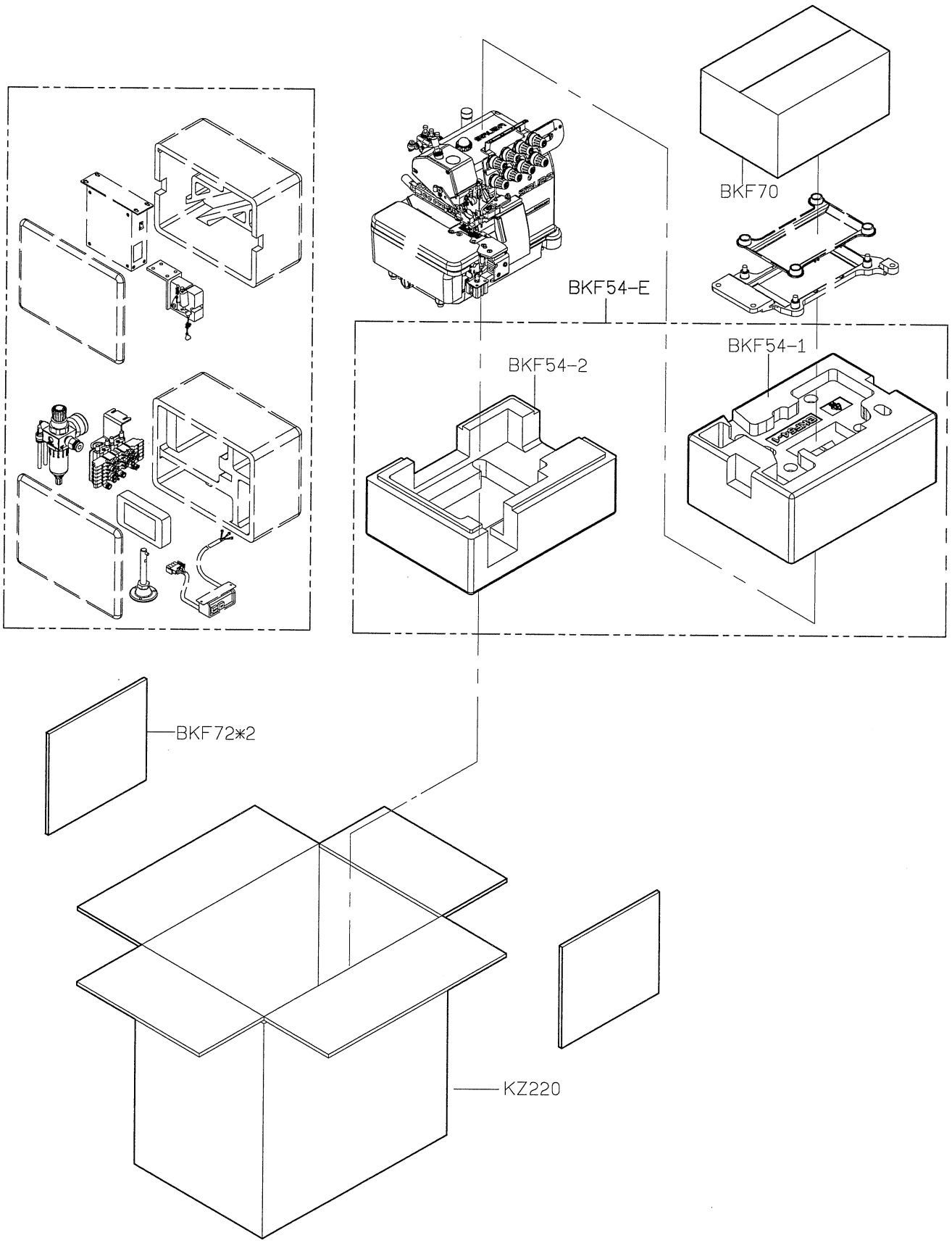

SIRUBA PARTS LIST	Series	Parts Group	Subclass / Remark	Page
	700L	BKF1		1/8
				Date
				2022/04/15

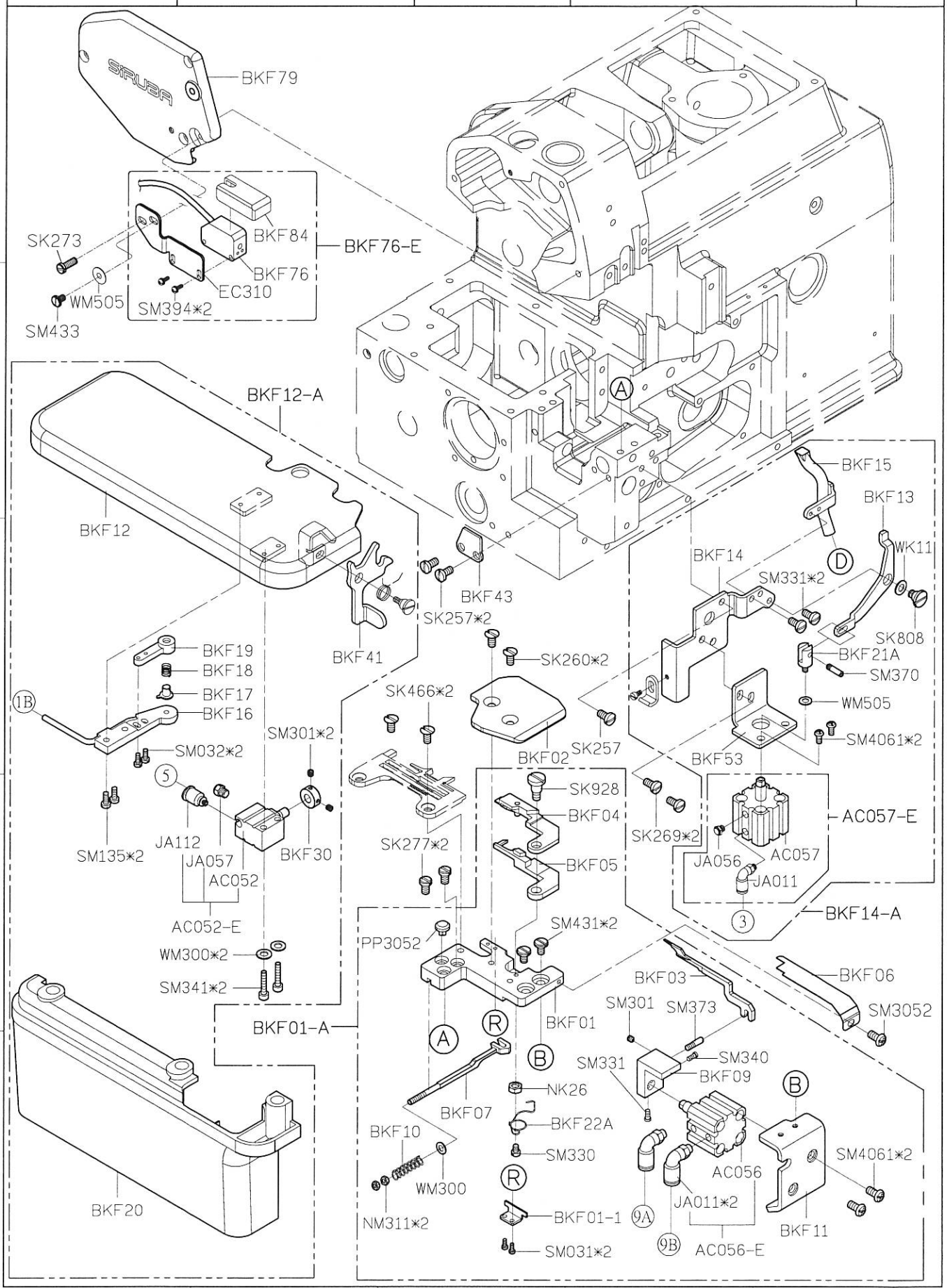

SIRUBA PARTS LIST	Series	Parts Group	Subclass / Remark	Page
	700L	BKF1		2/8
				Date
				2022/04/15

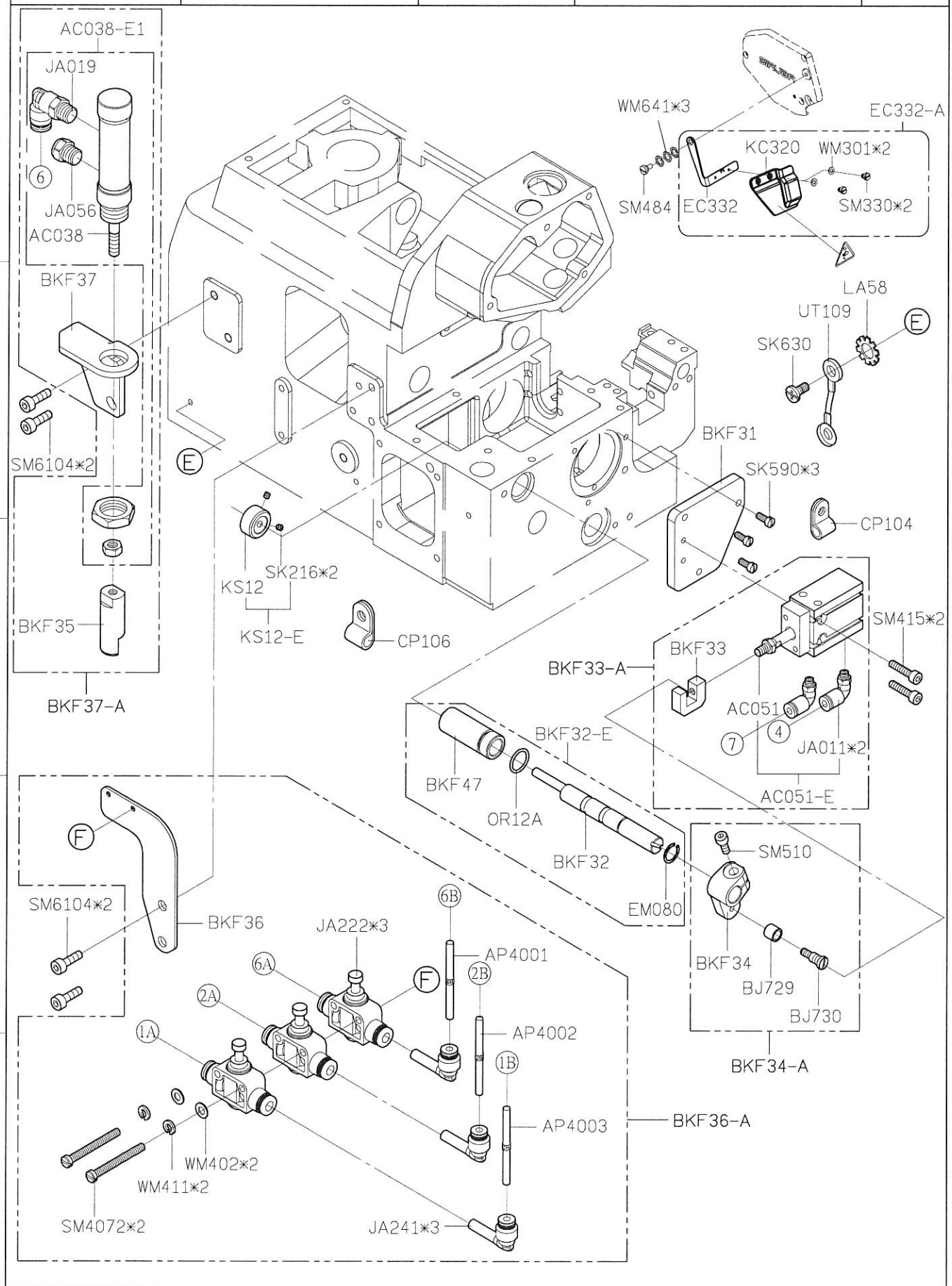

SIRUBA PARTS LIST	Series	Parts Group	Subclass / Remark	Page
	700L	BKF1		3/8
				Date
				2022/06/16

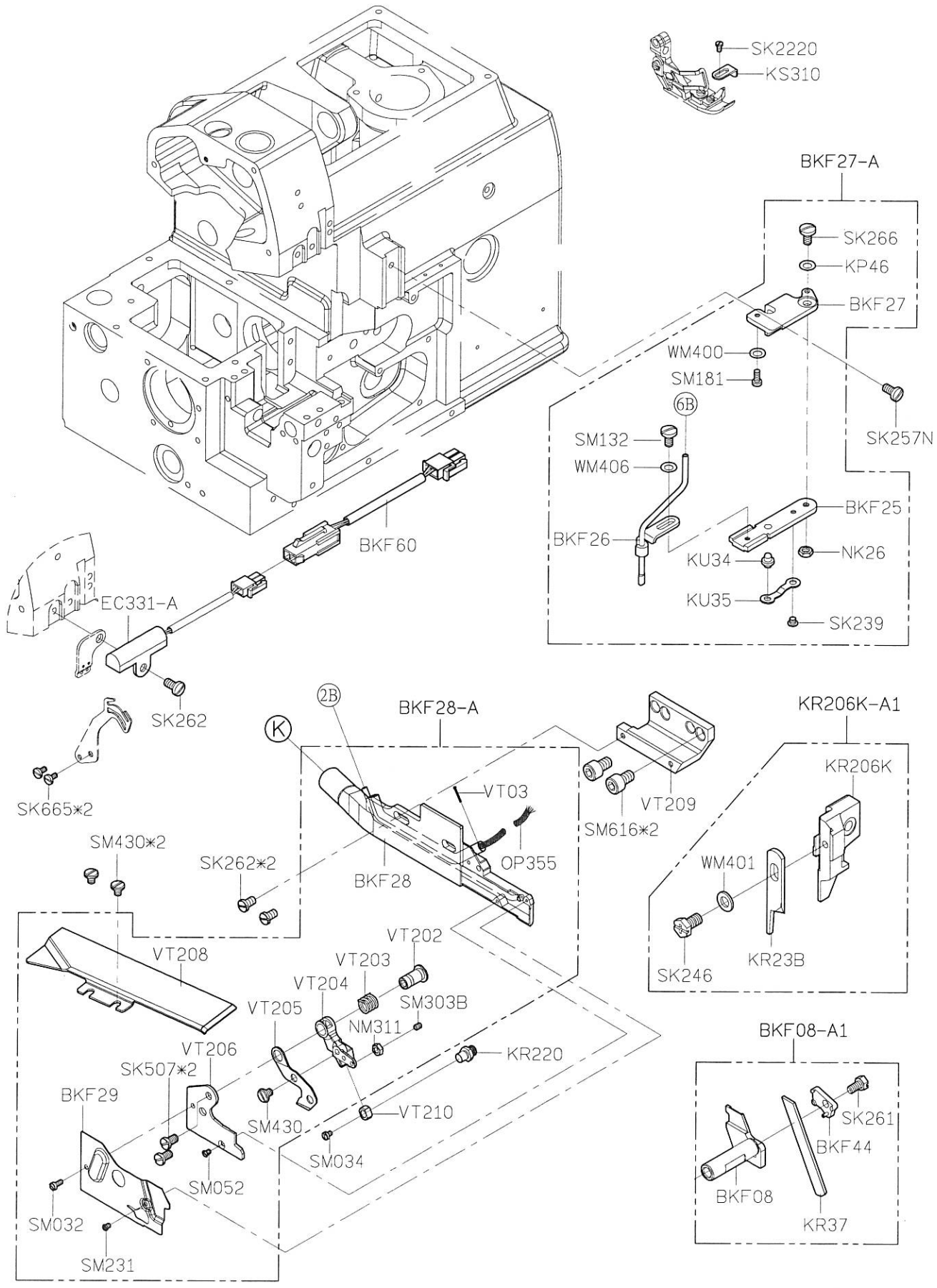

SIRUBA PARTS LIST	Series	Parts Group	Subclass / Remark	Page
	700L	BKF1		4/8
				Date
				2022/08/04

KC201L-B4

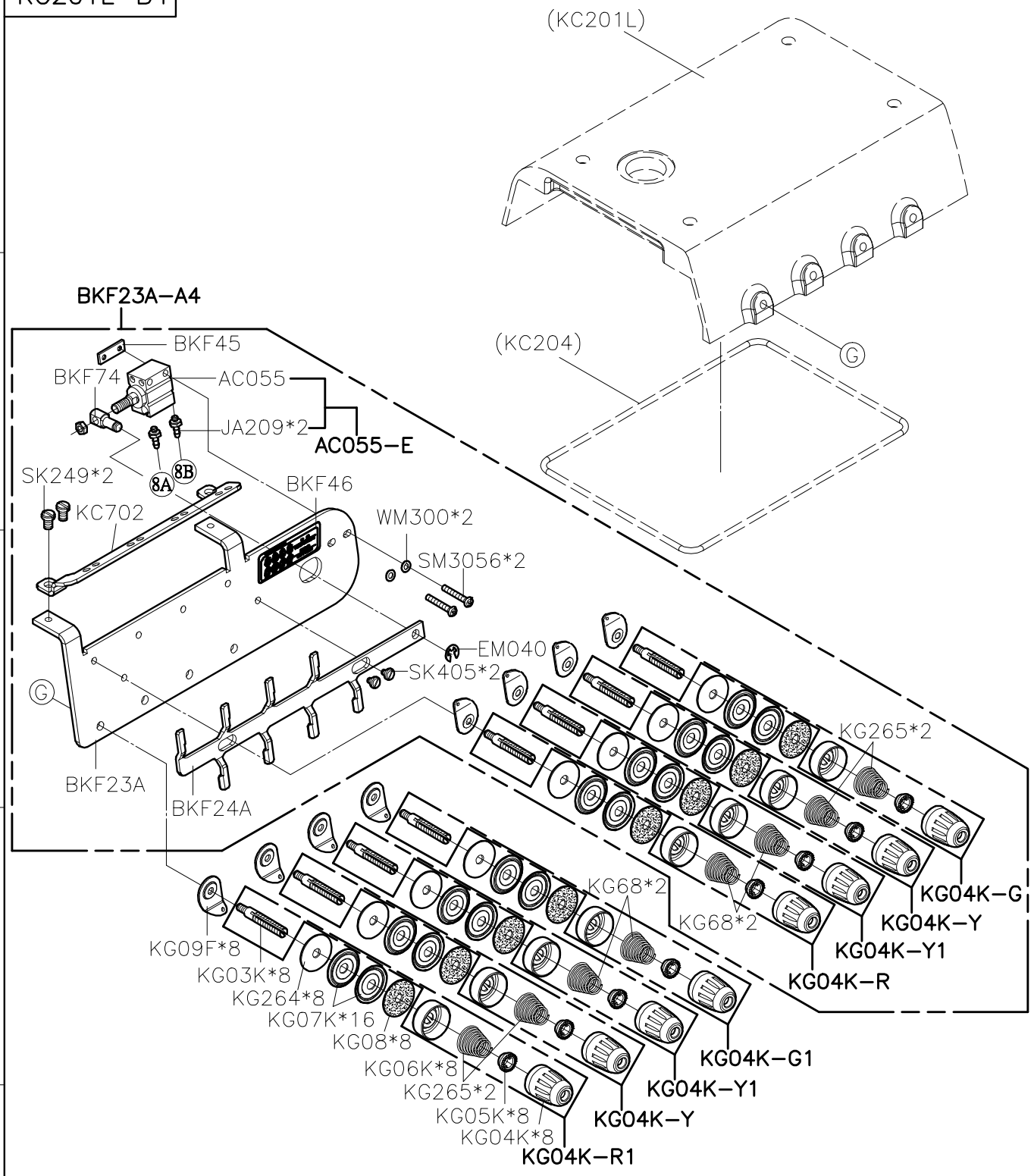

SiRUBA PARTS LIST	Series	Parts Group	Subclass / Remark	Page
	700L	BKF1		5/8
				Date
				2022/04/15

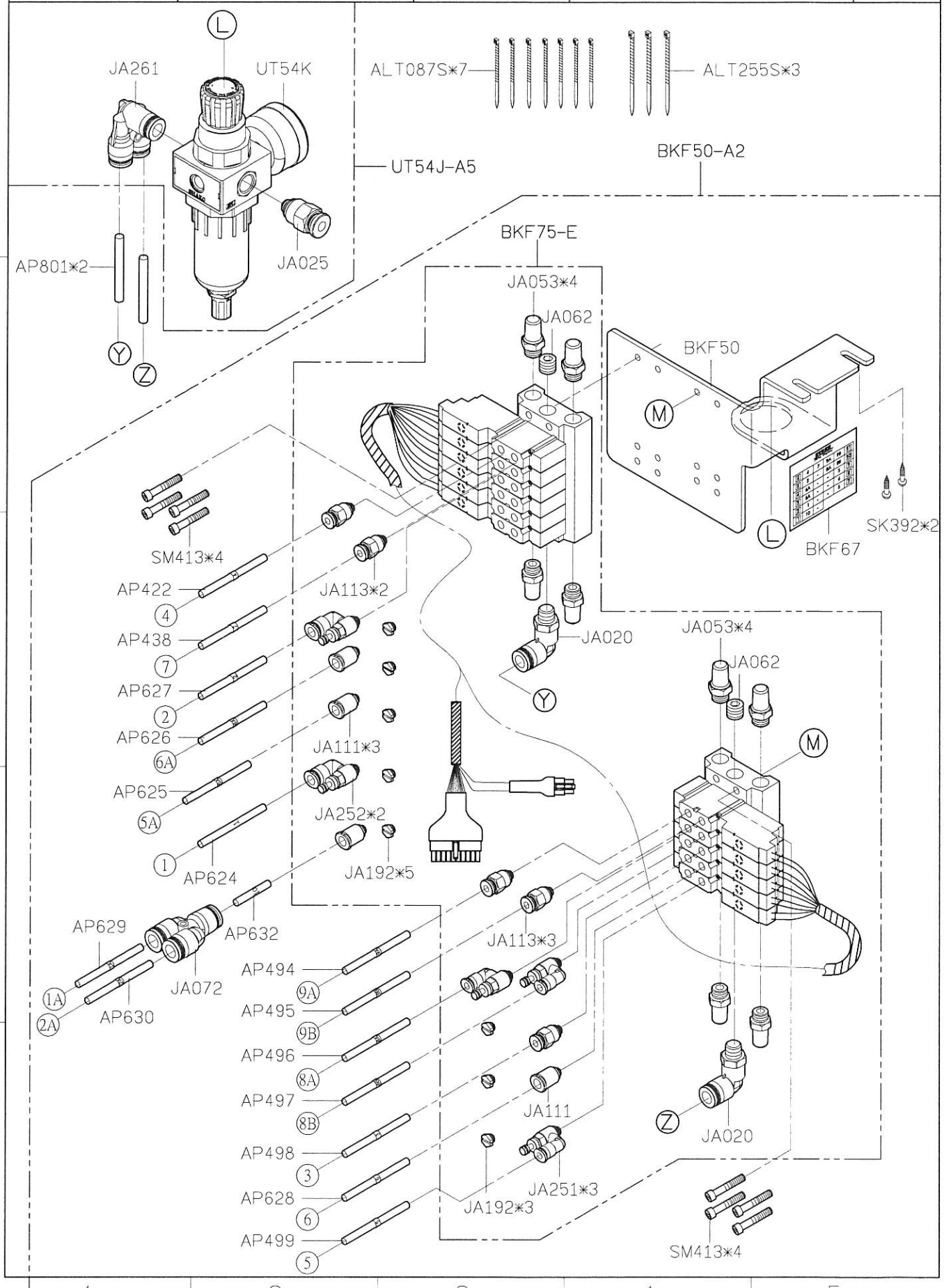

SiRUBA PARTS LIST	Series	Parts Group	Subclass / Remark	Page
	700L	BKF1		6/8
				Date
				2022/04/15

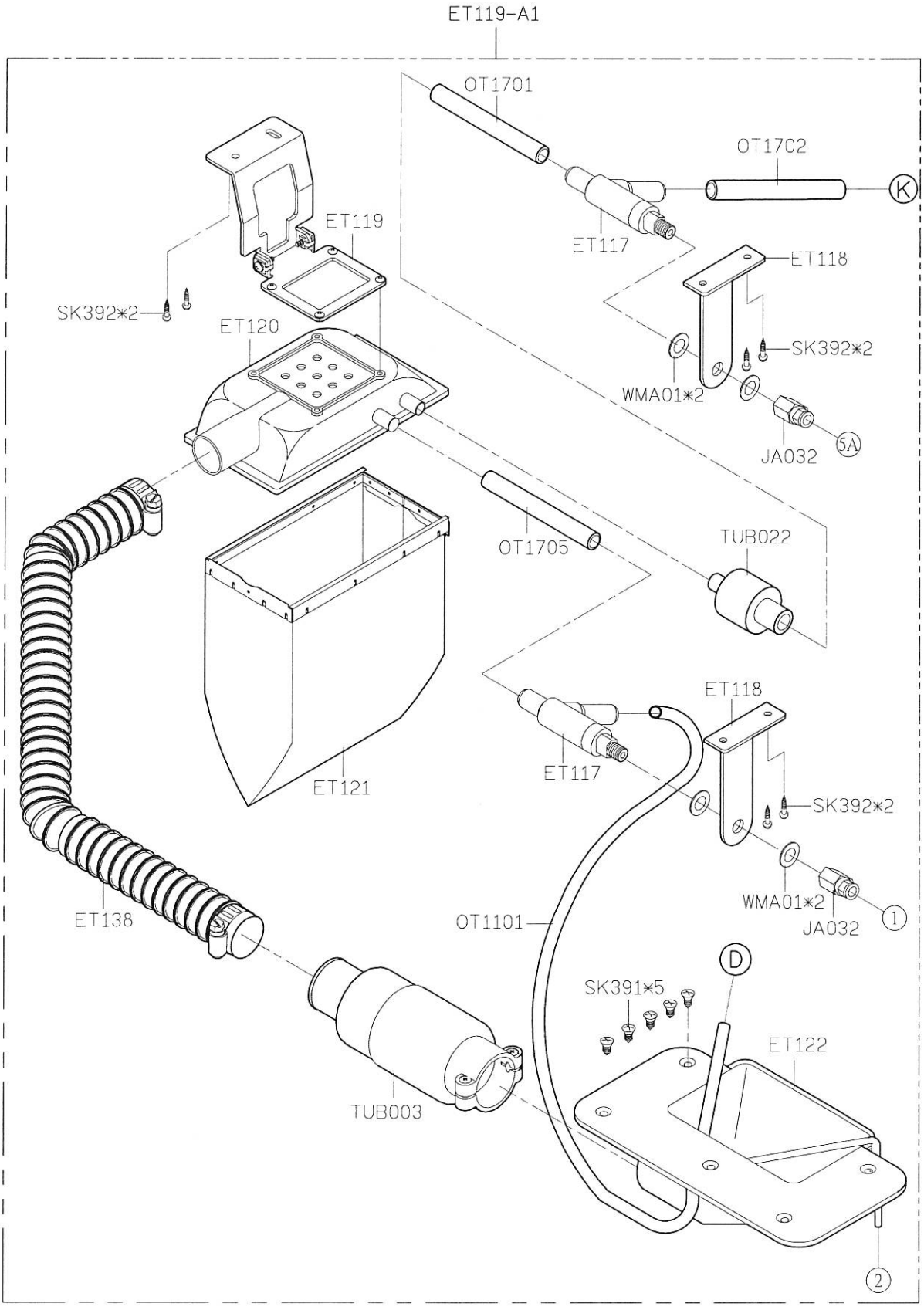

SiRUBA PARTS LIST	Series	Parts Group	Subclass / Remark	Page
	700L	BKF1		7/8
				Date
				2023/09/26

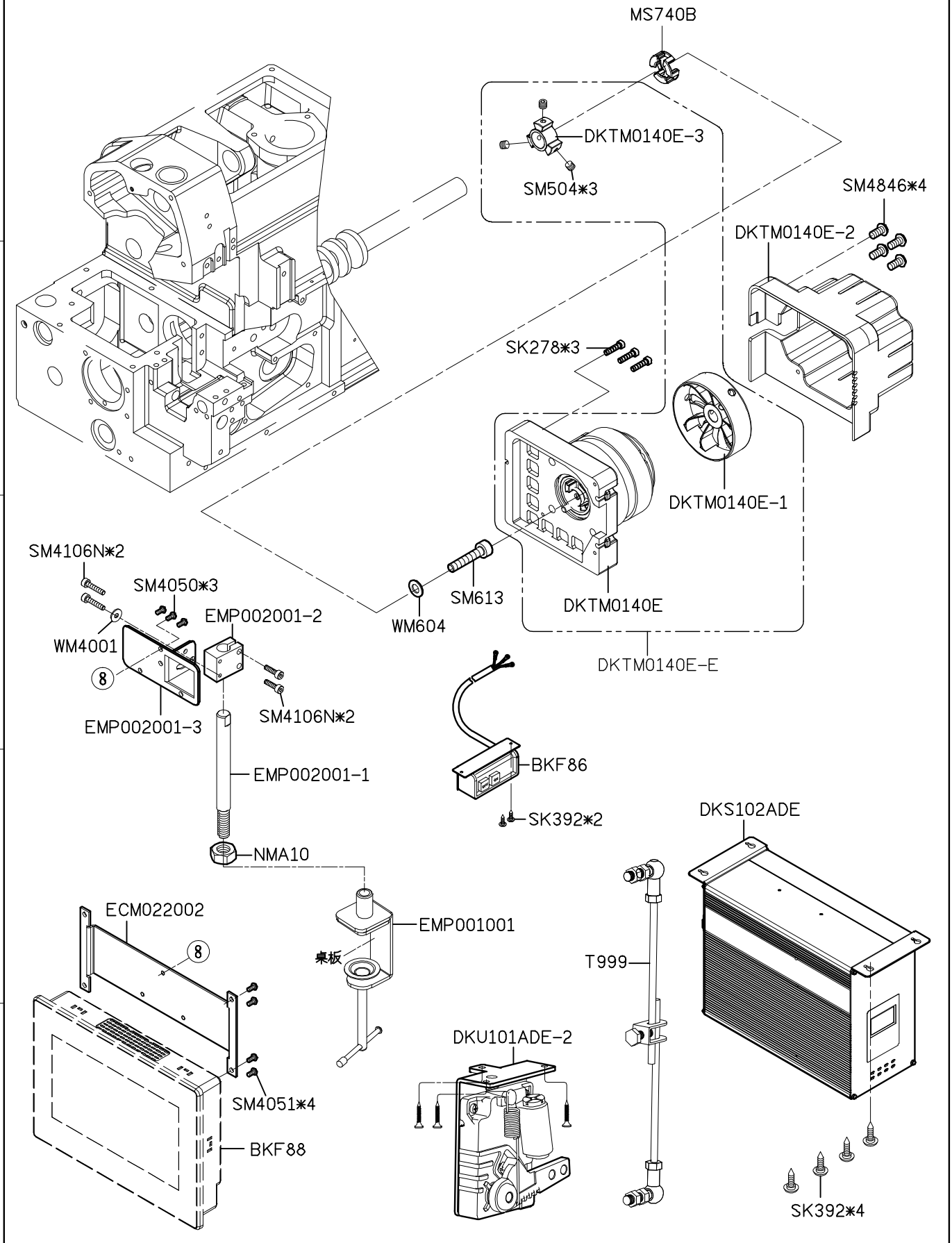

SIRUBA PARTS LIST	Series	Parts Group	Subclass / Remark	Page
	700L	BKF1		8/8
				Date
				2022/11/14

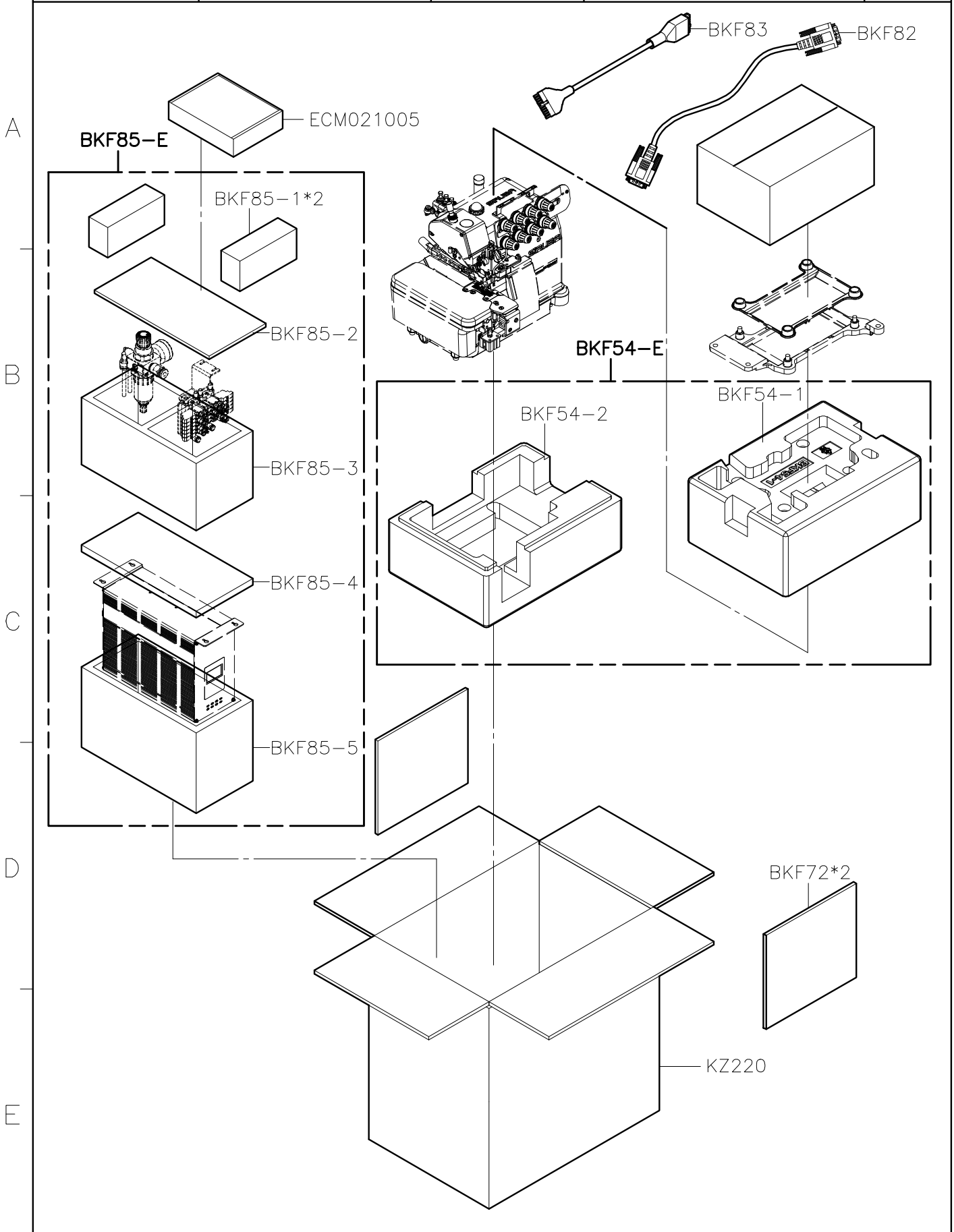

SIRUBA PARTS LIST	Series	Parts Group	Subclass / Remark	Page
	700L	BKT-L	With ECA-L	1/3
				Date
				2022/12/19

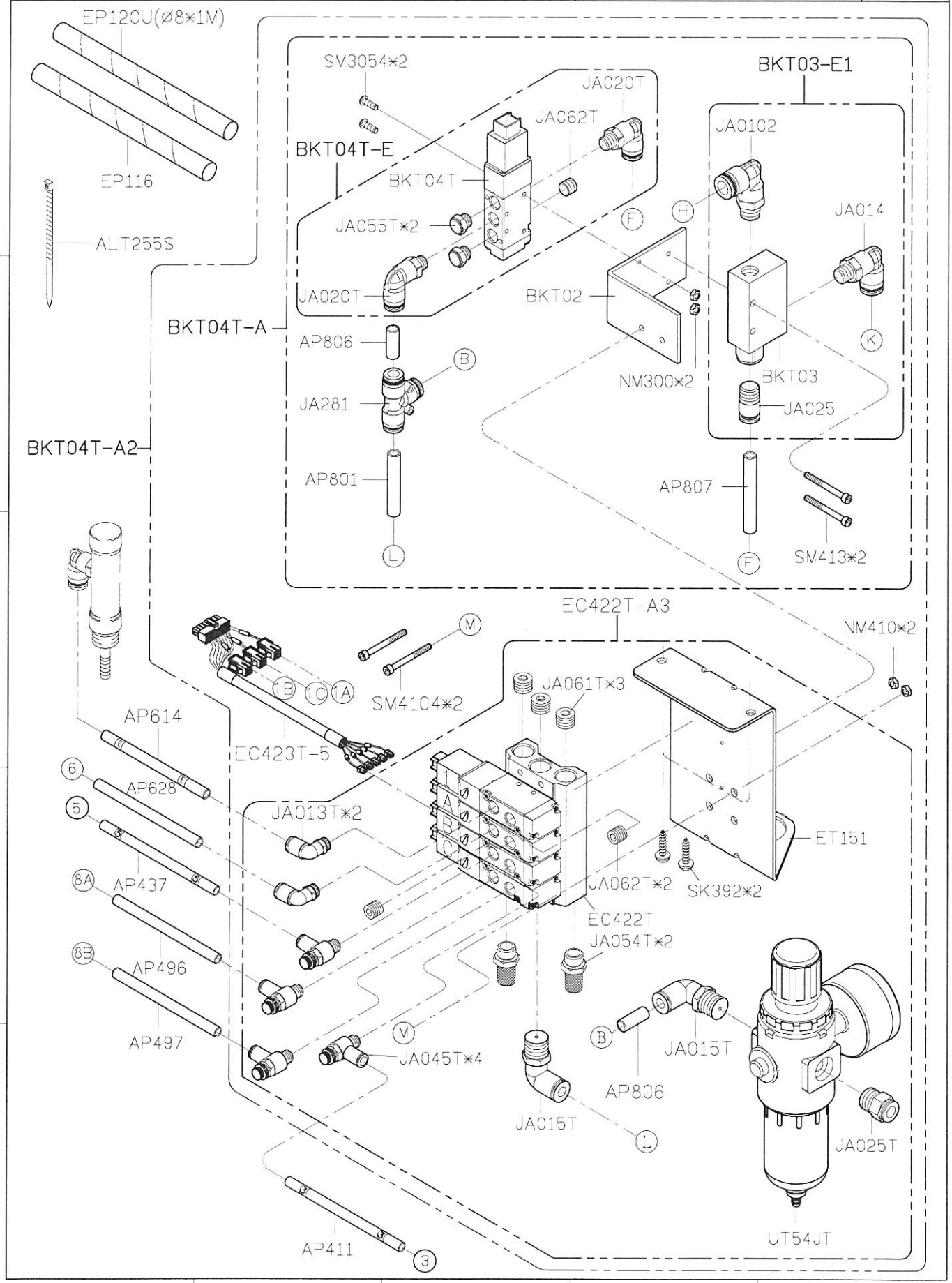

SIRUBA PARTS LIST	Series	Parts Group	Subclass / Remark	Page
	700L	BKT-L	With ECA-L	2/3
				Date
				2021/11/26

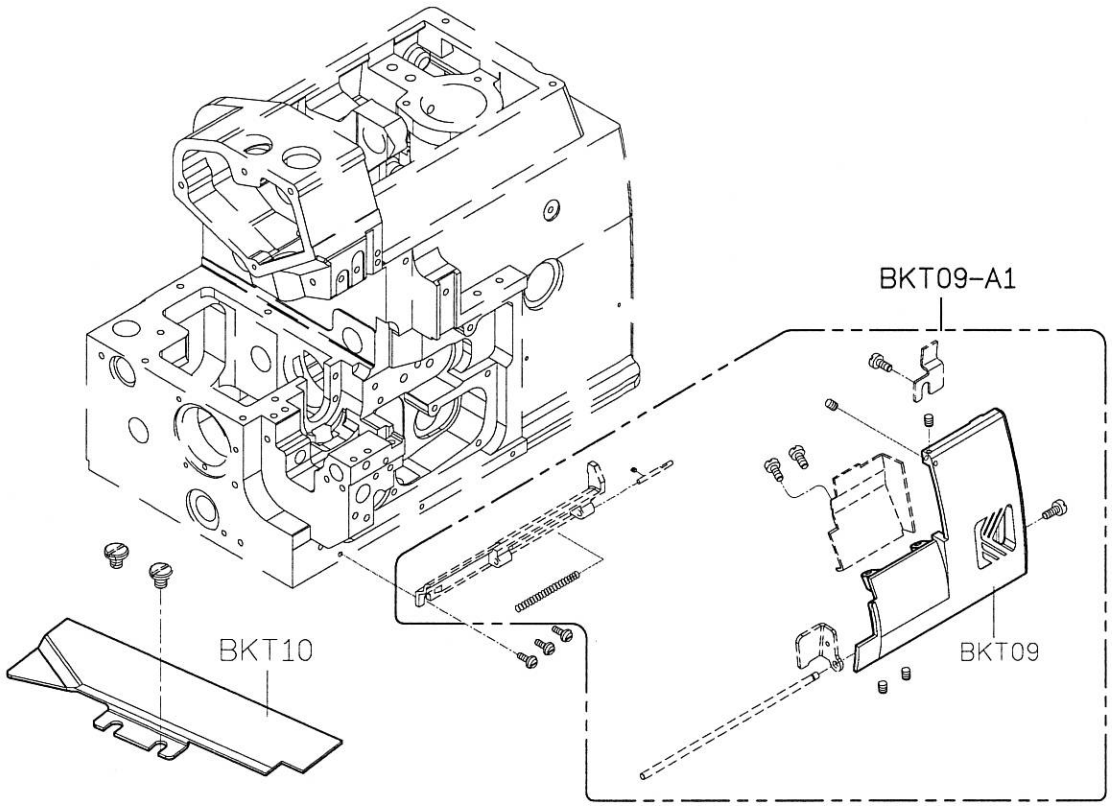

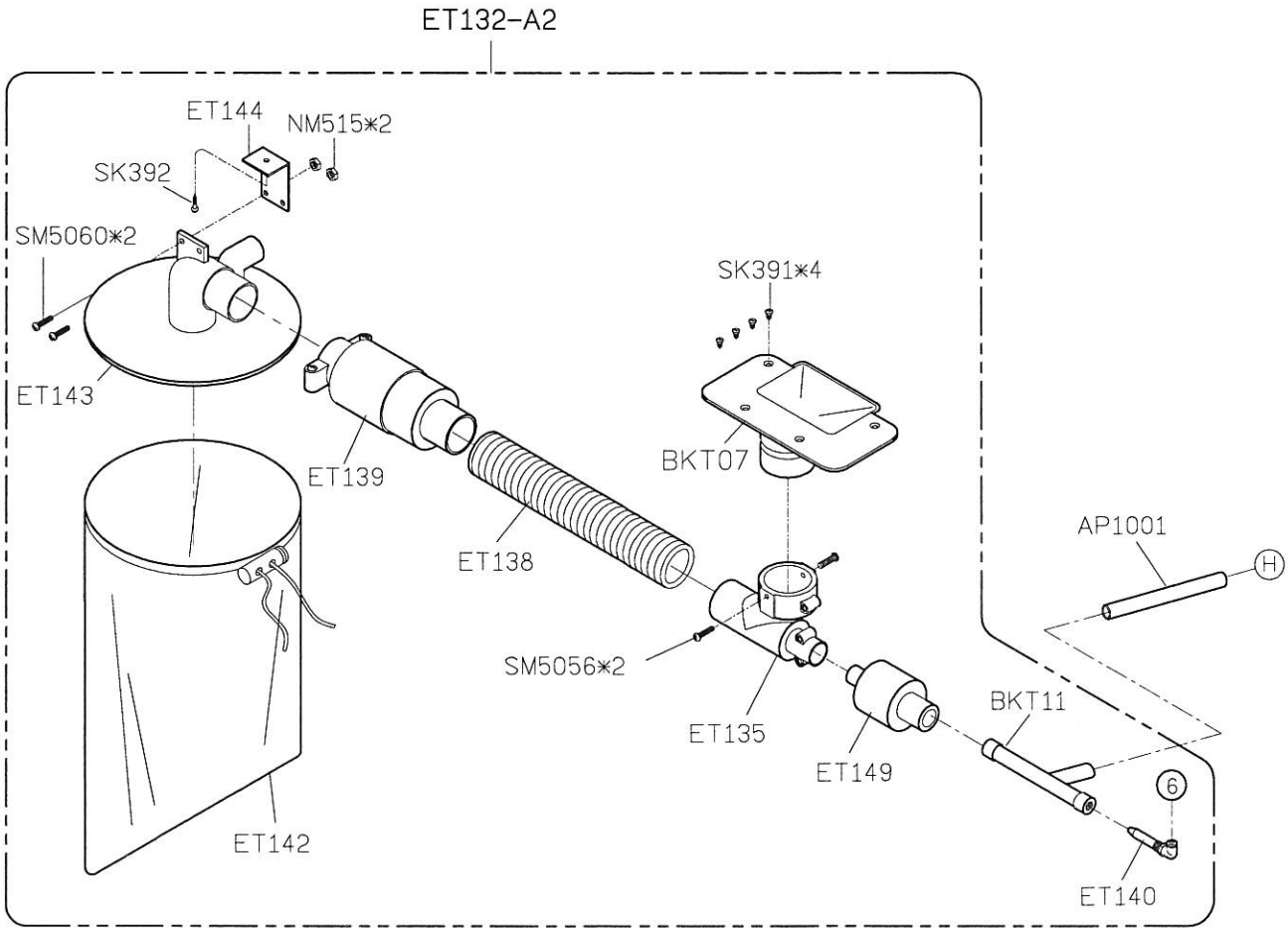

SIRUBA PARTS LIST	Series	Parts Group	Subclass / Remark	Page
	700L	BKT-L	With ECA-L	3/3
				Date
				2021/08/12

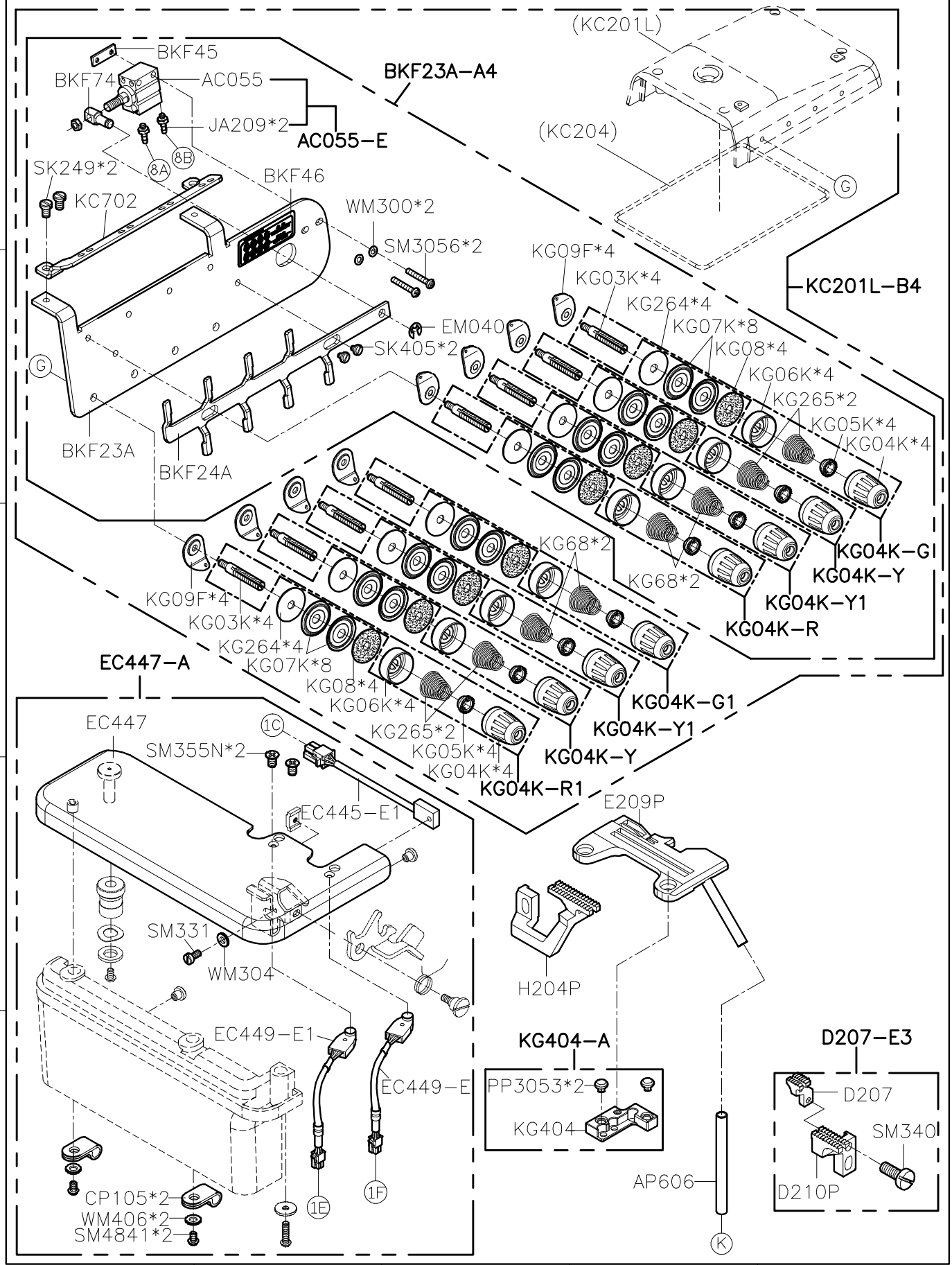

SIRUBA PARTS LIST	Series	Parts Group	Subclass / Remark	Page
	700L	BKT-L1	With ECA-L	1/3
				Date
				2022/12/19

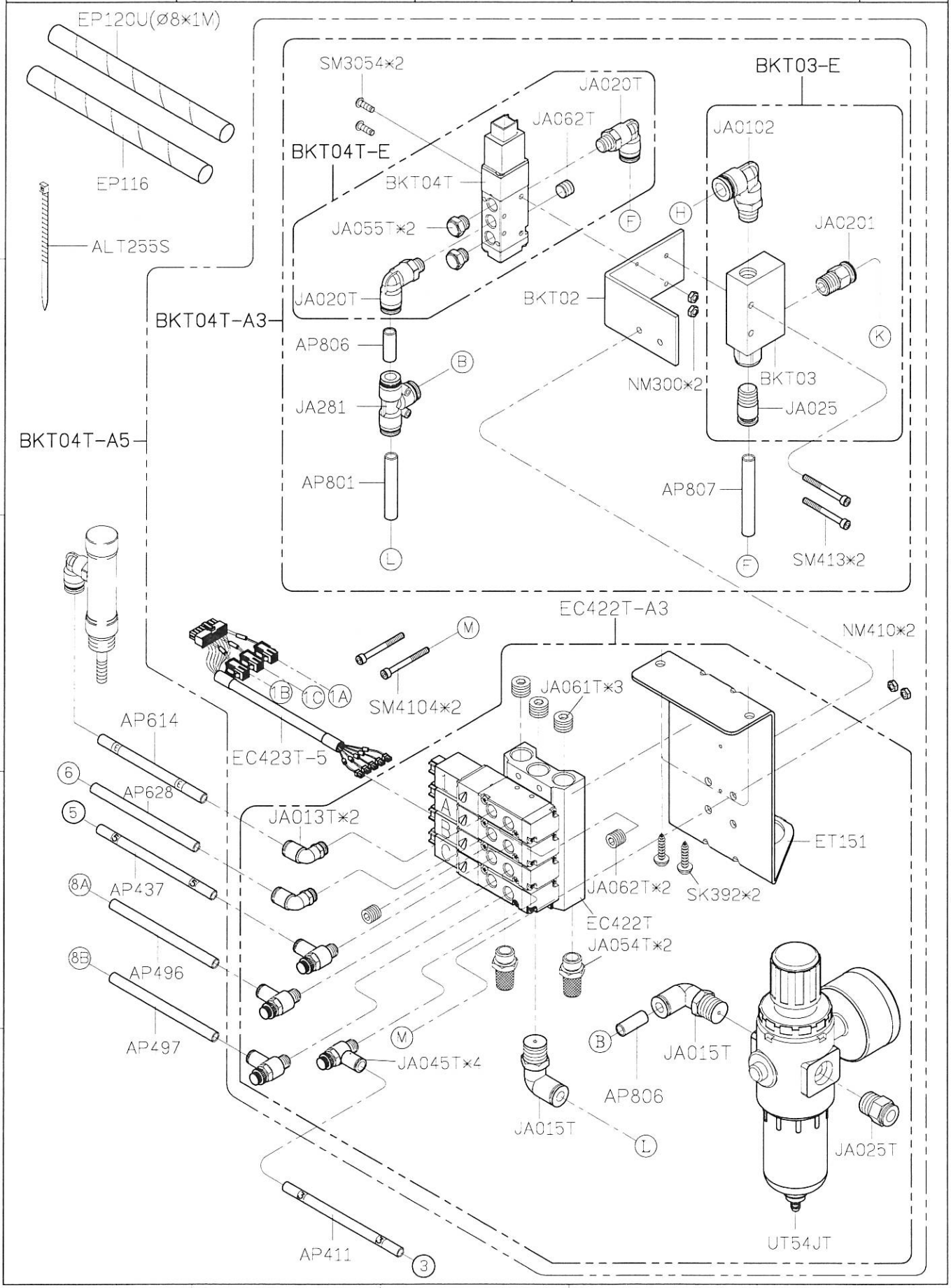

SiRUBA PARTS LIST	Series	Parts Group	Subclass / Remark	Page
	700L	BKT-L1	With ECA-L	2/3
				Date
				2021/11/26

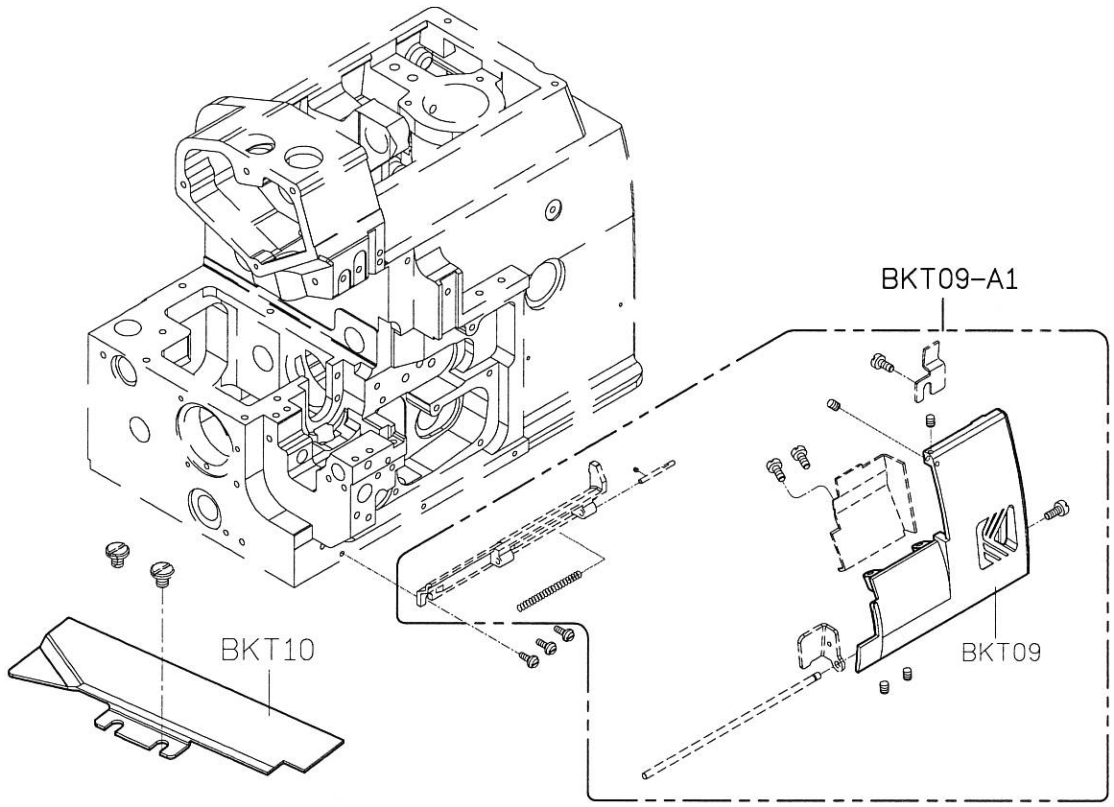

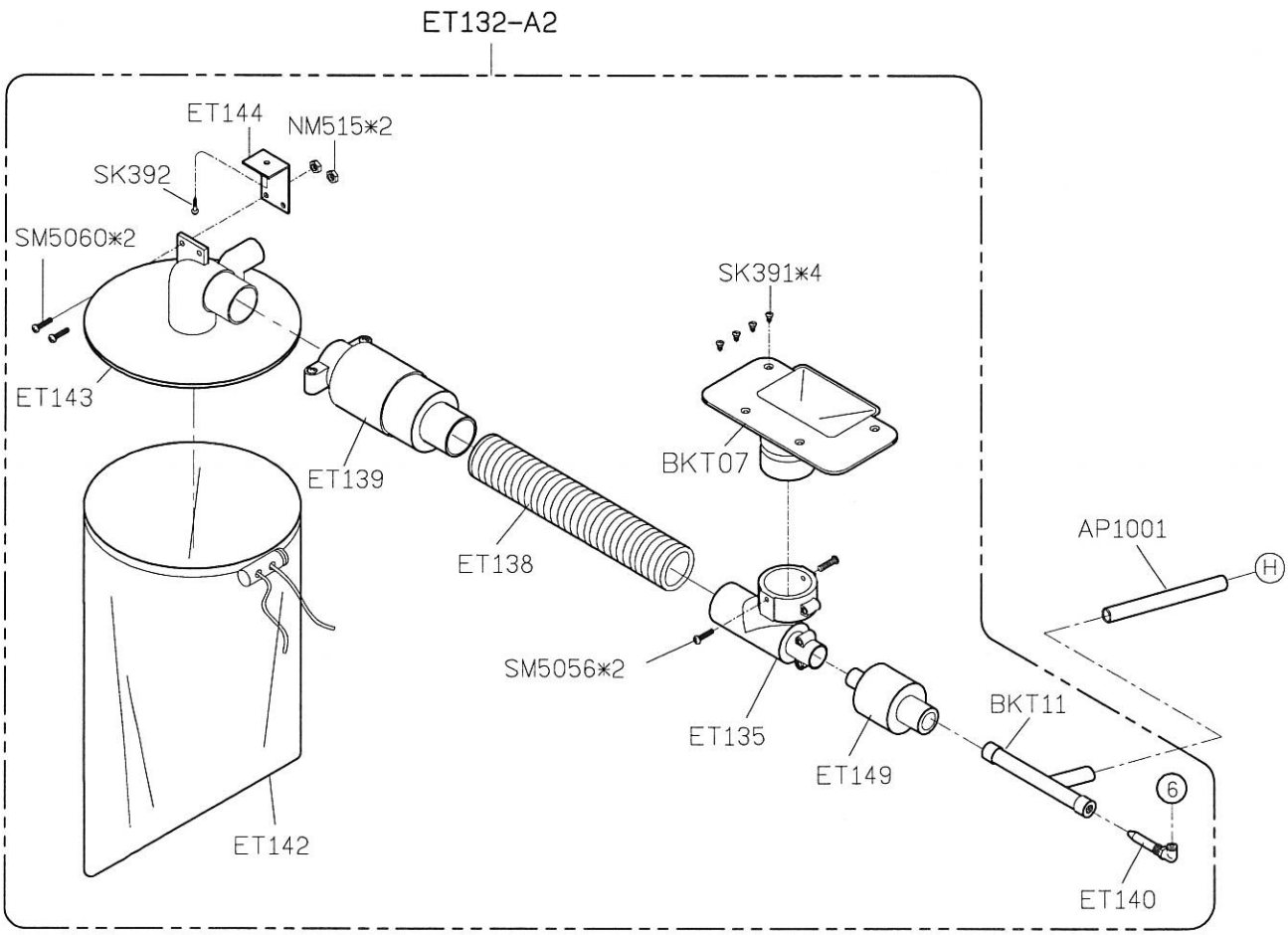

SIRUBA PARTS LIST	Series	Parts Group	Subclass / Remark	Page
	700L	BKT-L1	With ECA-L	3/3
				Date
				2021/08/12

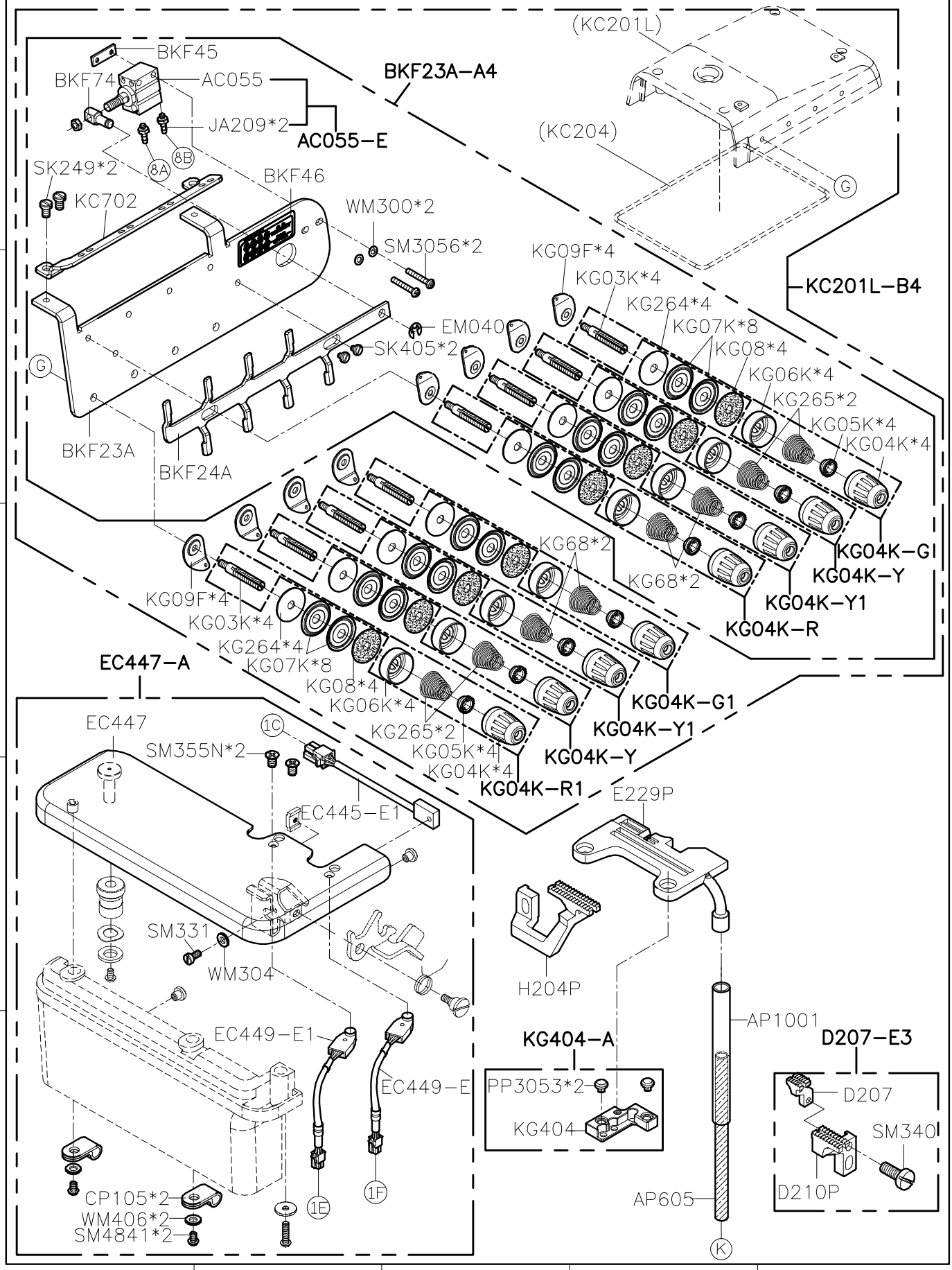

SiRUBA PARTS LIST	Series	Parts Group	Subclass / Remark	Page
	700L	CT-K		1/1
				Date
				2023/10/24

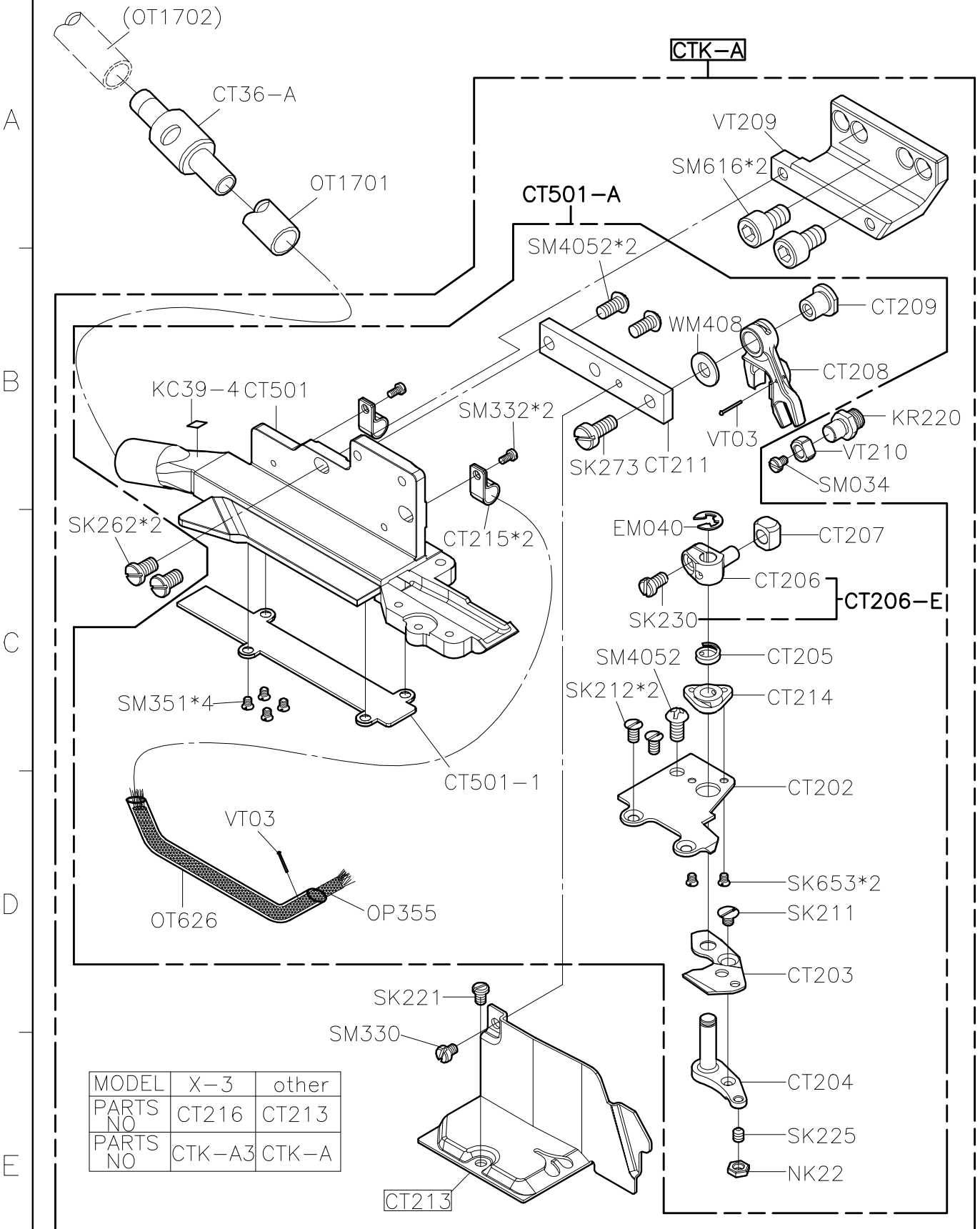

MODEL	X-3	other
PARTS NO	CT216	CT213
PARTS NO	CTK-A3	CTK-A

SiRUBA PARTS LIST	Series	Parts Group	Subclass / Remark	Page
	700L	CTE-L		1/5
				Date
				2023/10/25

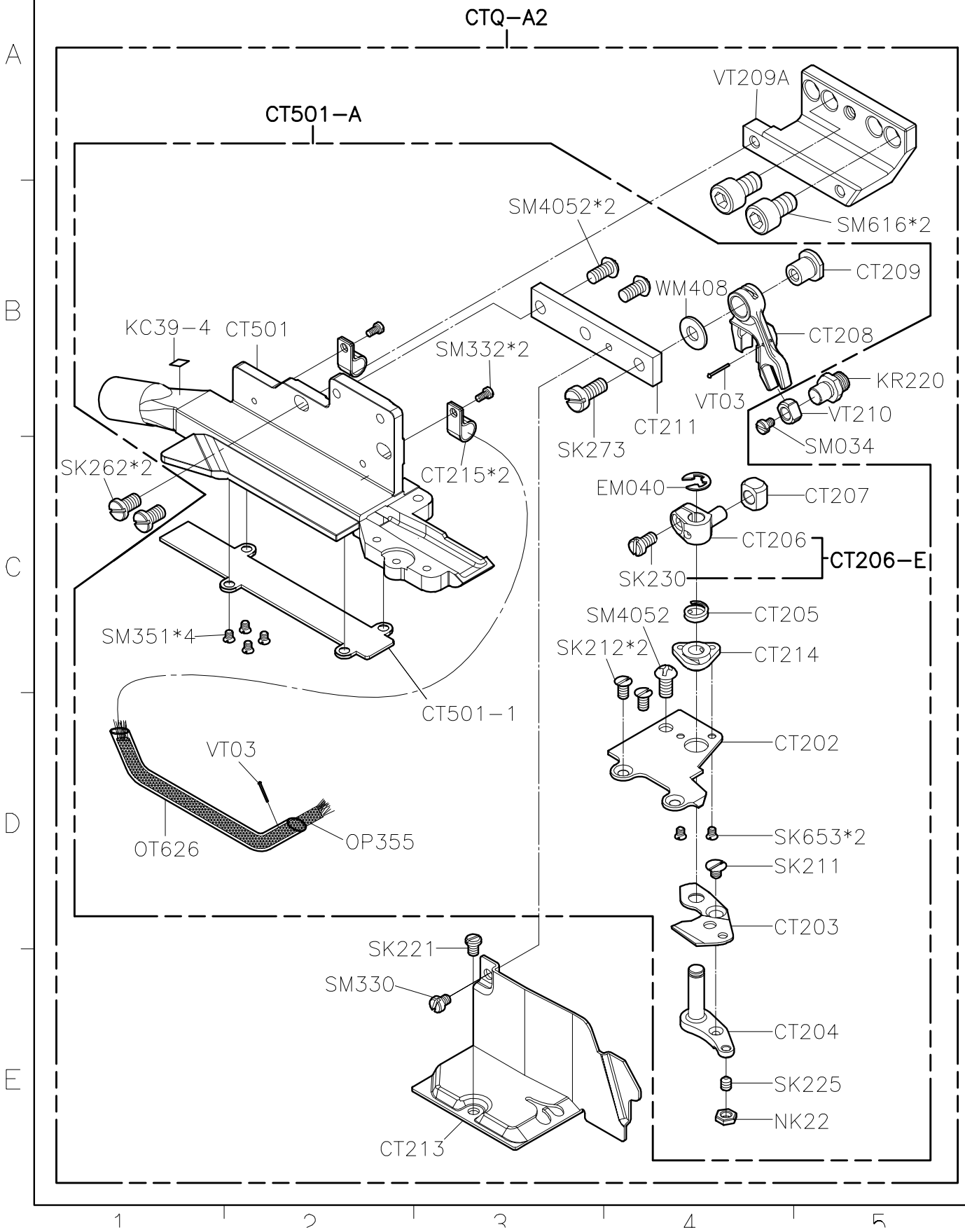

SIRUBA	Series	Parts Group	Subclass / Remark	Page
PARTS LIST	700L	CTE-L		2/5
				Date
				2021/12/01

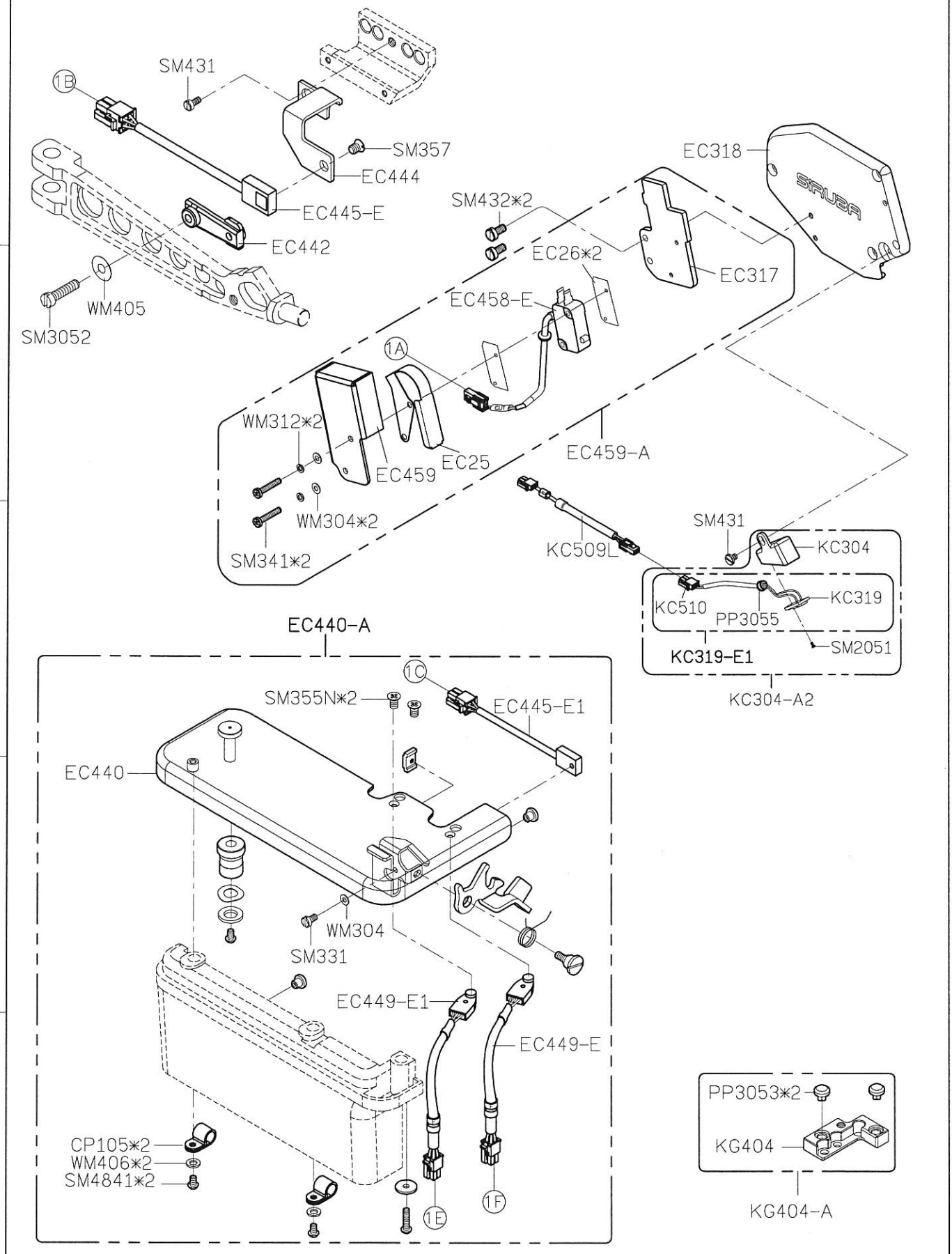

SIRUBA PARTS LIST	Series	Parts Group	Subclass / Remark	Page
	700L	CTE-L		3/5
				Date
				2022/12/19

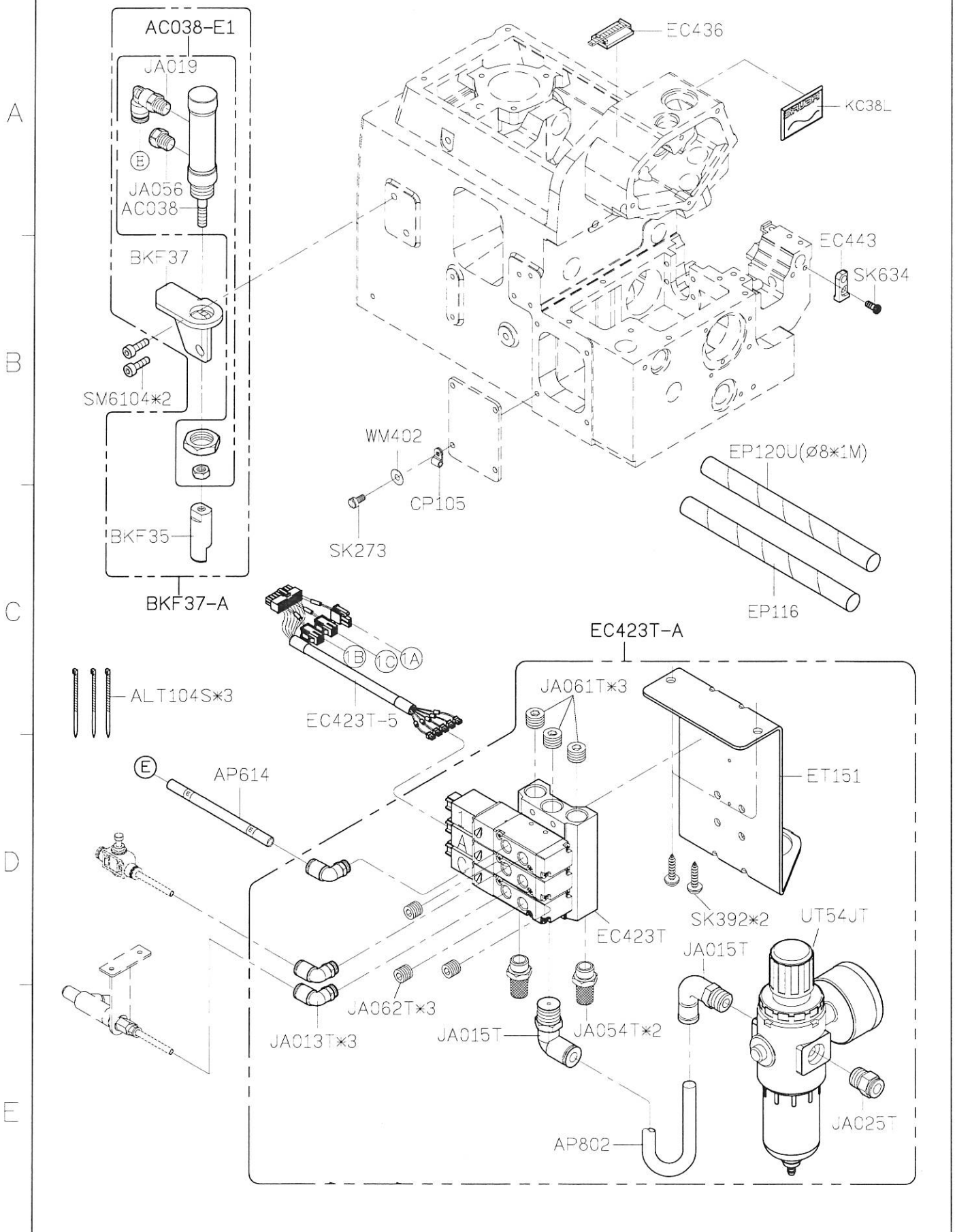

SIRUBA PARTS LIST	Series	Parts Group	Subclass / Remark	Page
	700L	CTE-L		4/5
				Date
				2021/12/01

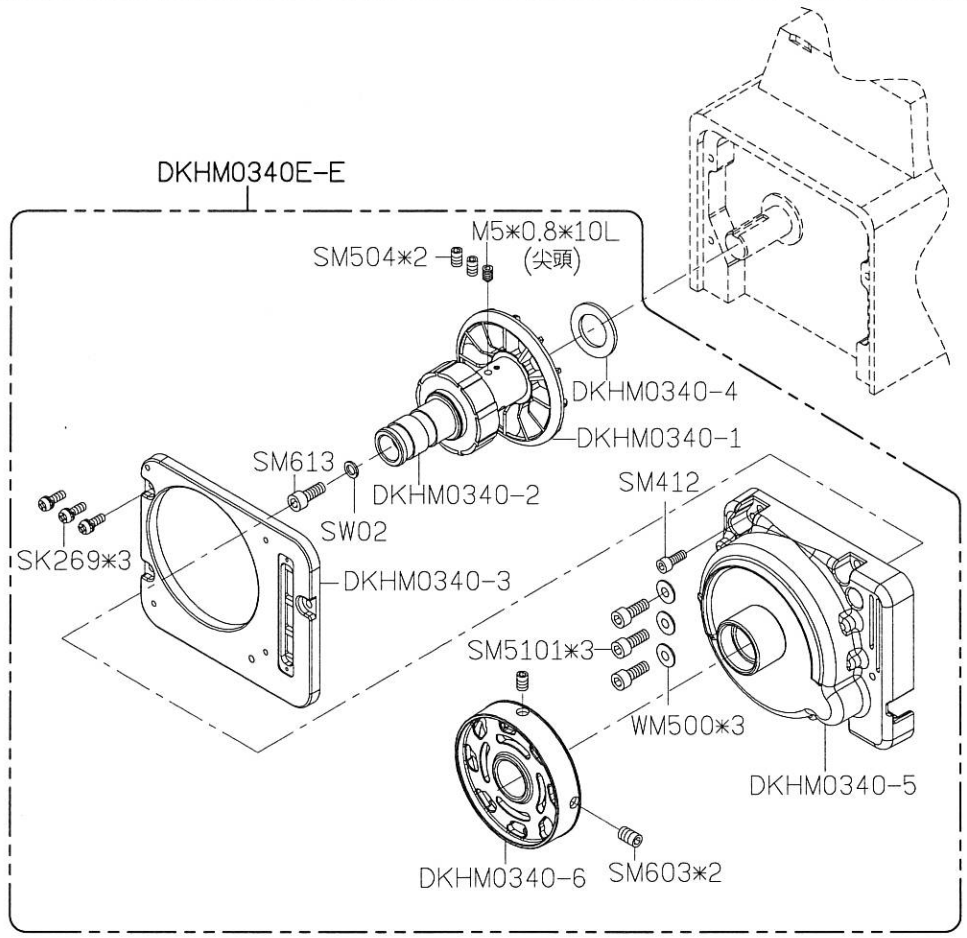

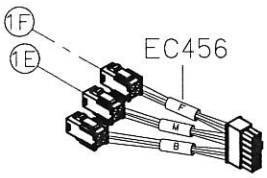

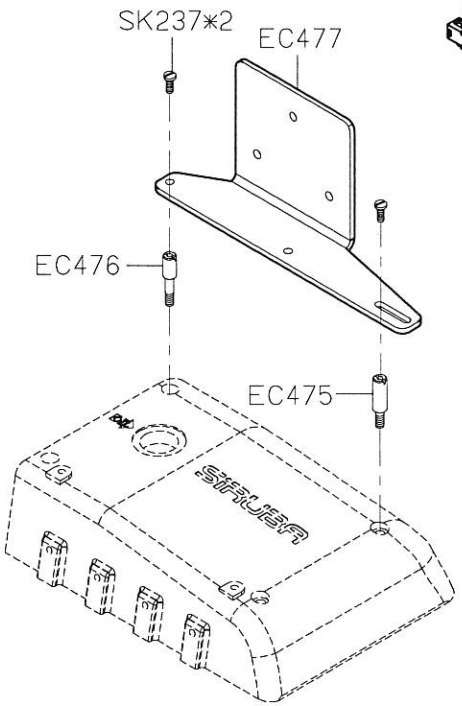

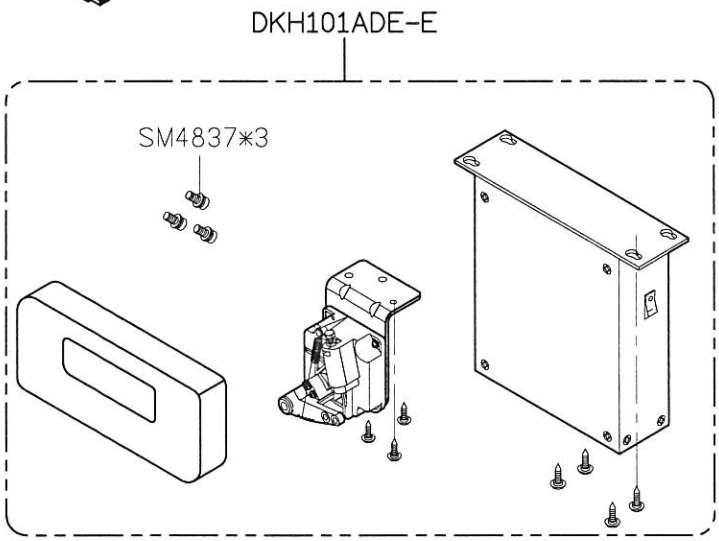

SIRUBA PARTS LIST	Series	Parts Group	Subclass / Remark	Page
	700L	CTE-L		5/5
				Date
				2021/12/01

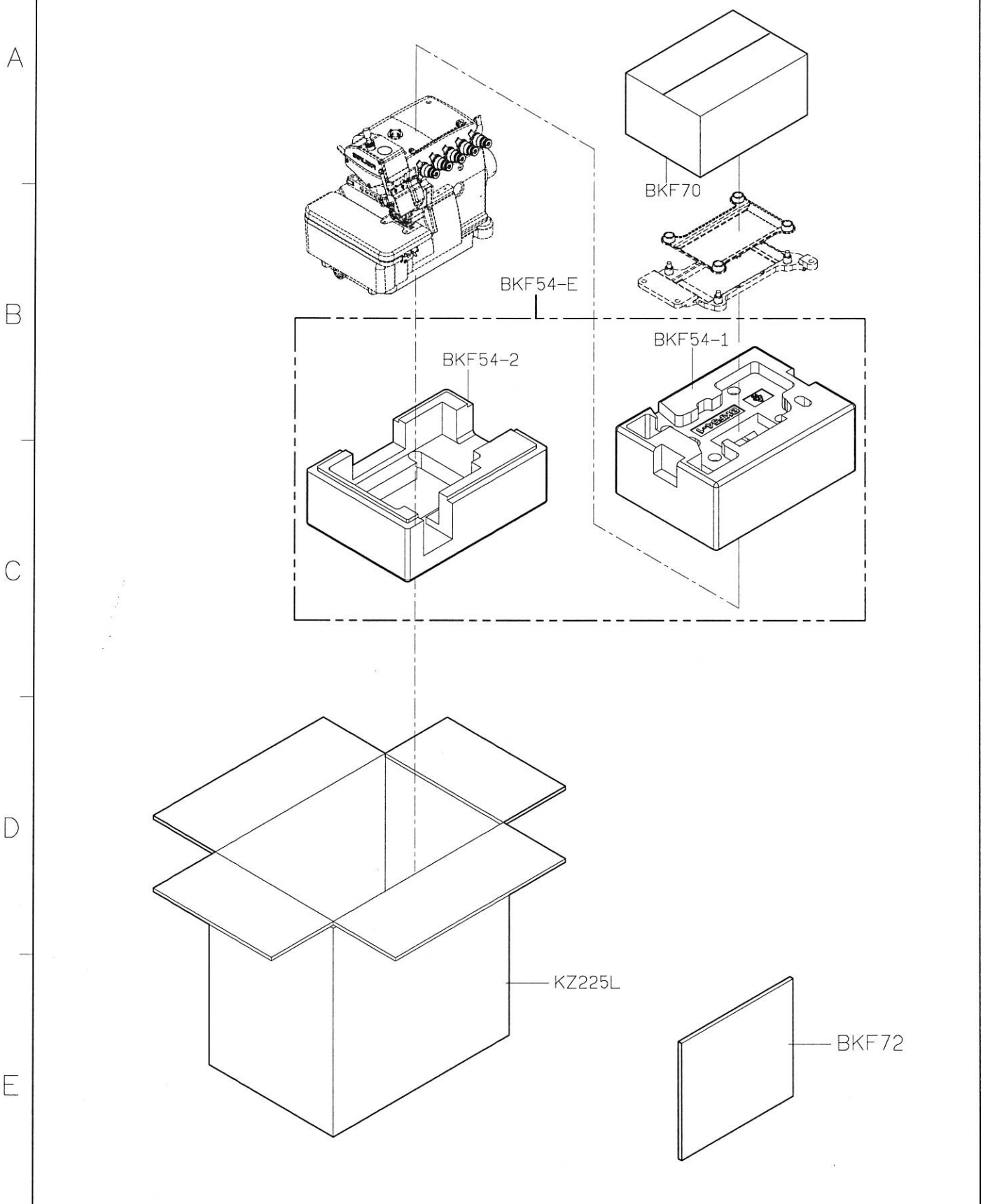

SIRUBA PARTS LIST	Series	Parts Group	Subclass / Remark	Page
	700L	CTE-U		1/5
				Date
				2023/08/30

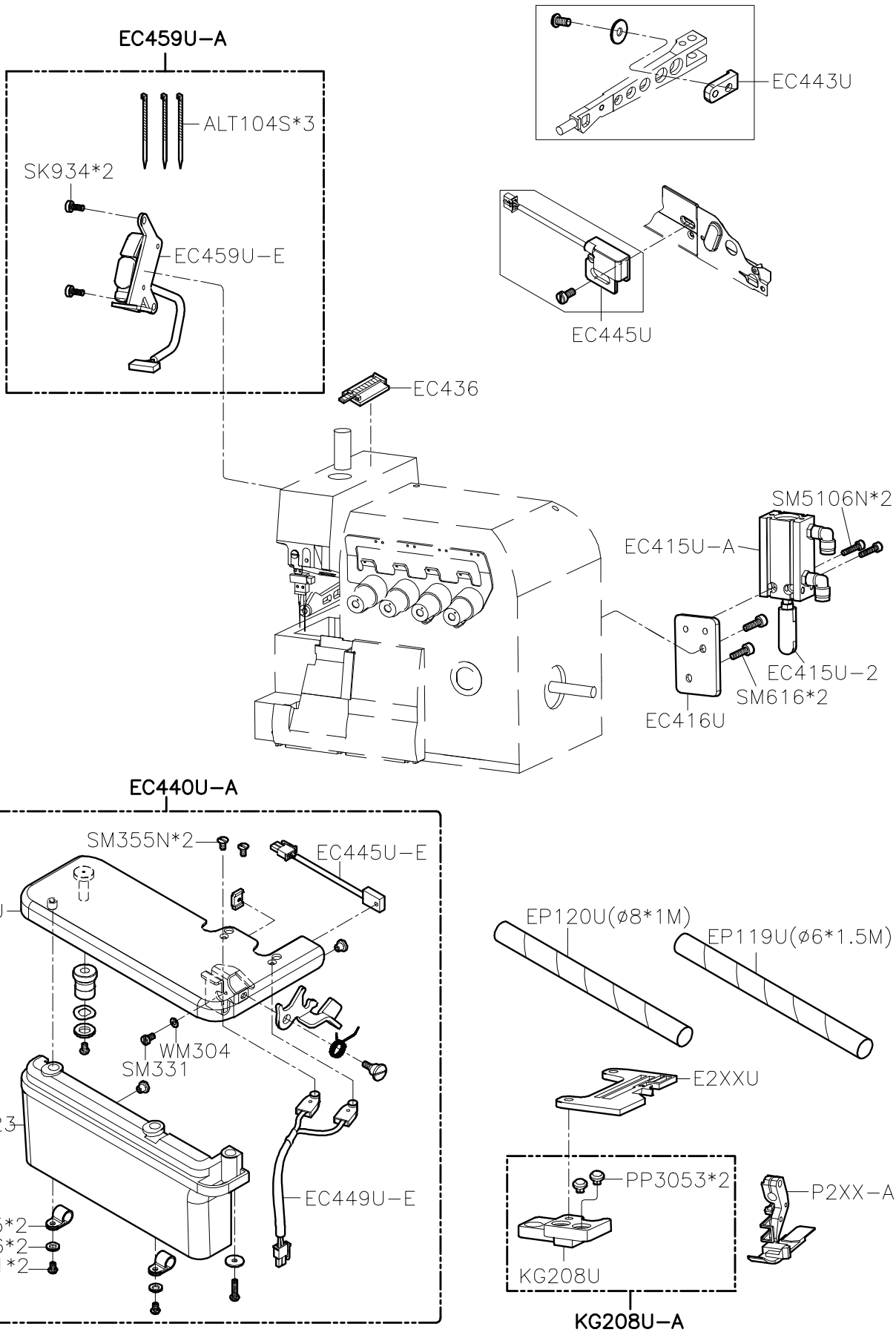

SIRUBA PARTS LIST	Series	Parts Group	Subclass / Remark	Page
	700L	CTE-U		2/5
				Date
				2023/04/26

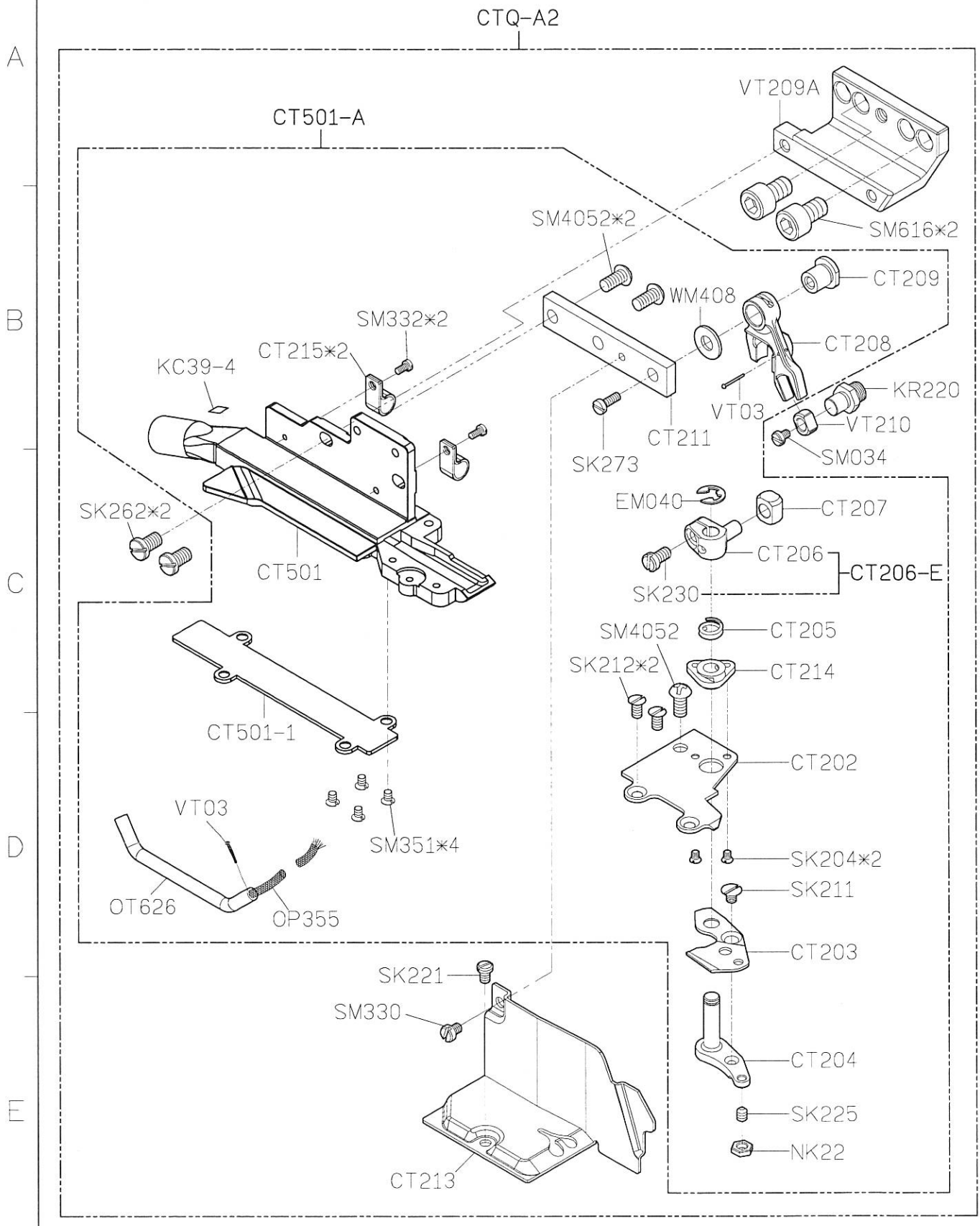

SIRUBA PARTS LIST	Series	Parts Group	Subclass / Remark	Page
	700L	CTE-U		3/5
				Date
				2023/04/26

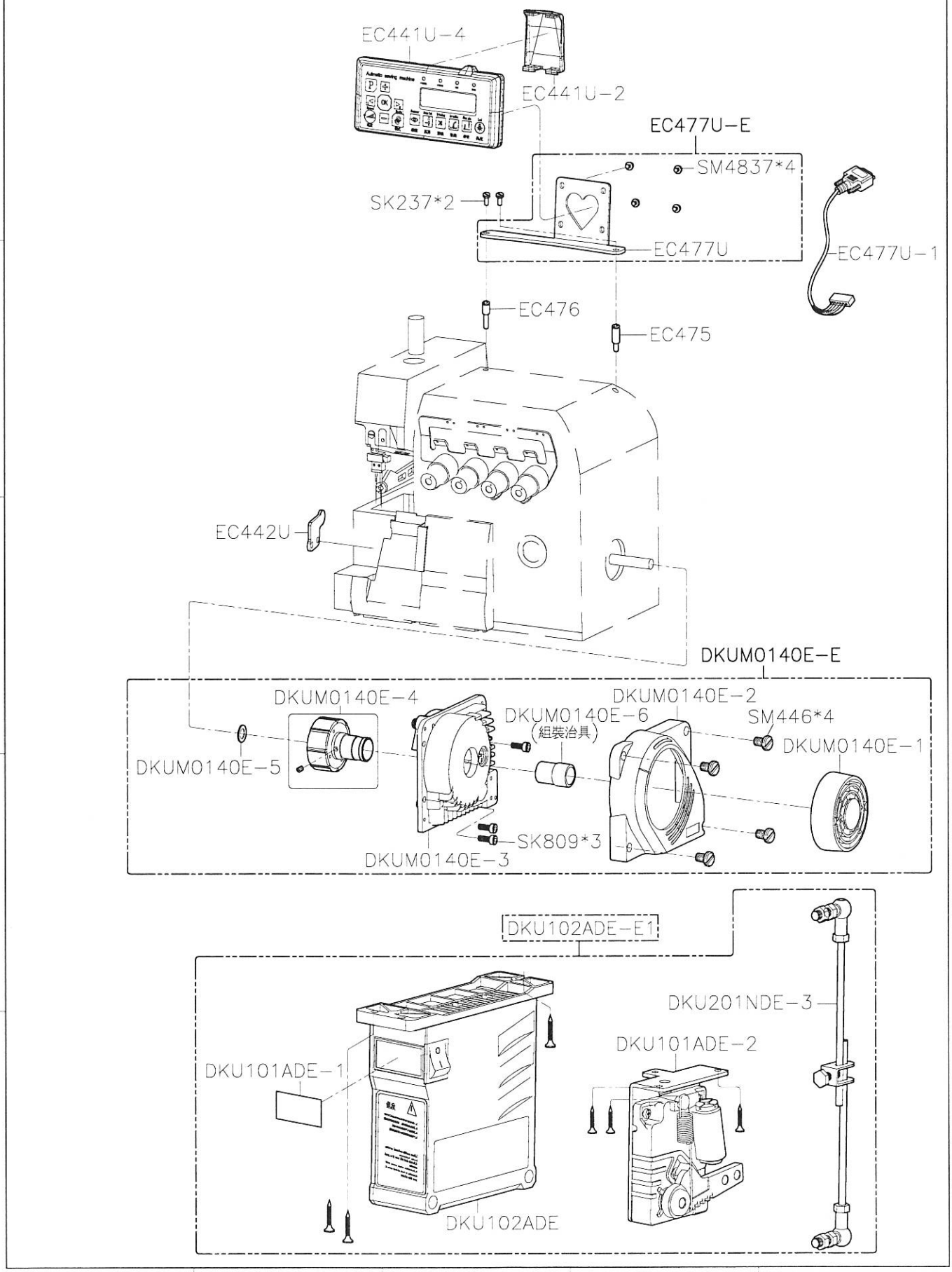

SiRUBA PARTS LIST	Series	Parts Group	Subclass / Remark	Page
	700L	CTE-U		4/5
				Date
				2026/07/02

TUC－04

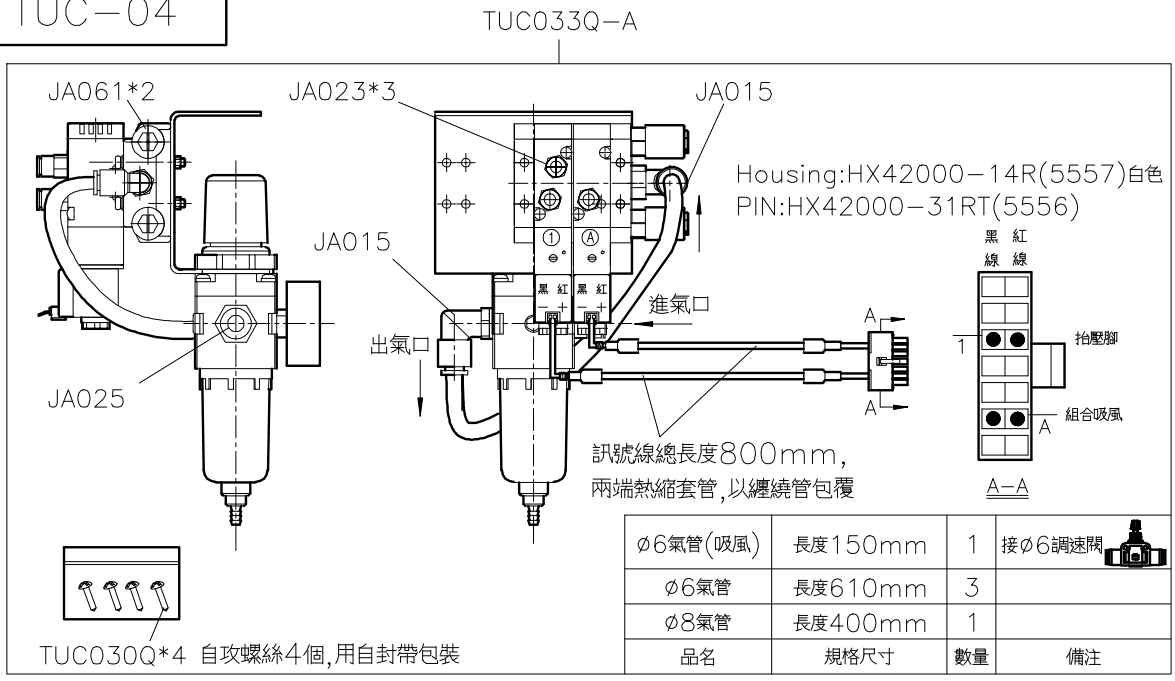

品名	規格尺寸	數量	備注
ø6氣管(吸風)	長度150mm	1	接ø6調速閥
ø6氣管	長度610mm	3	
ø8氣管	長度400mm	1	

TZ－XF－4012

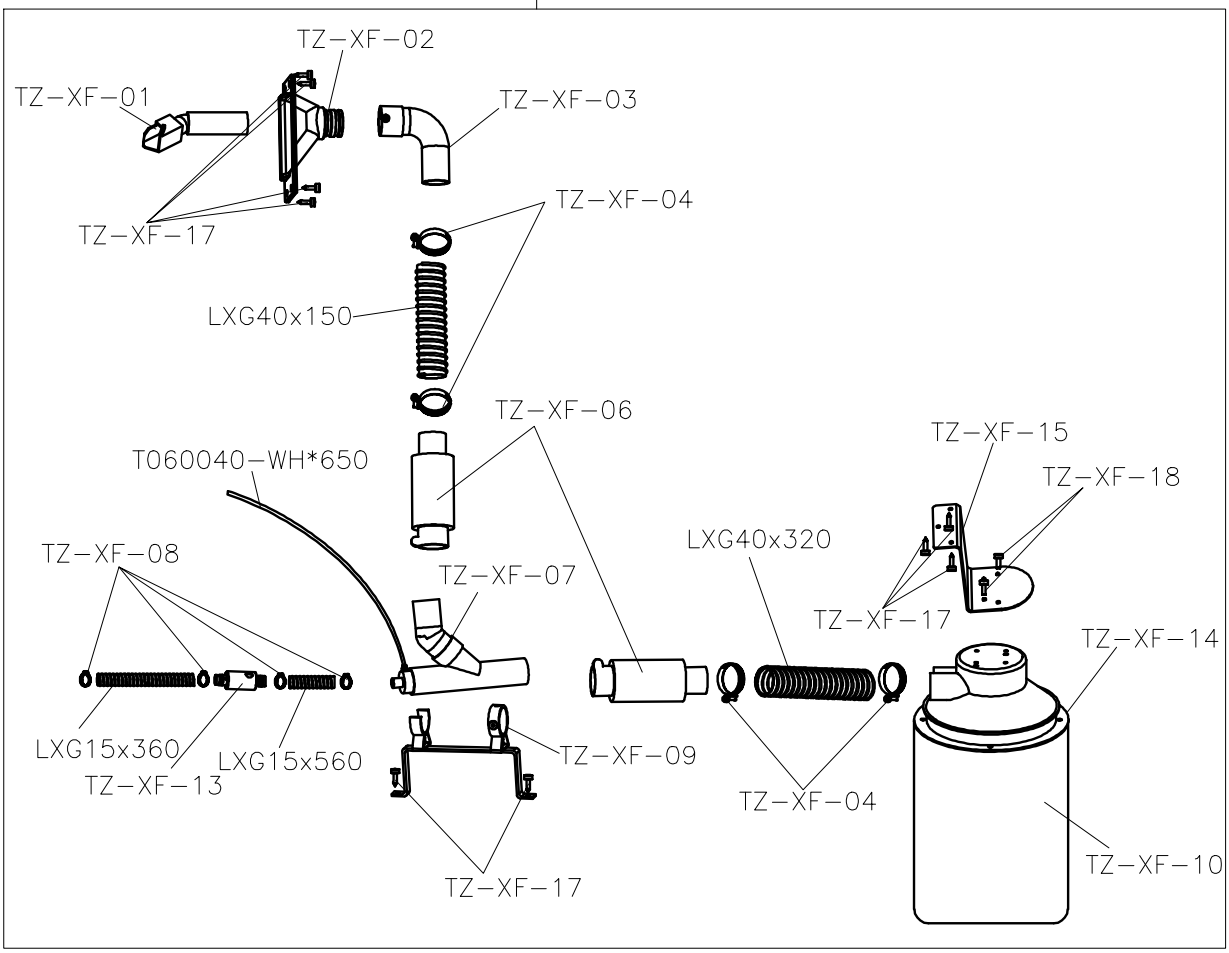

SIRUBA PARTS LIST	Series	Parts Group	Subclass / Remark	Page
	700L	CTE-U		5/5
				Date
				2023/04/26

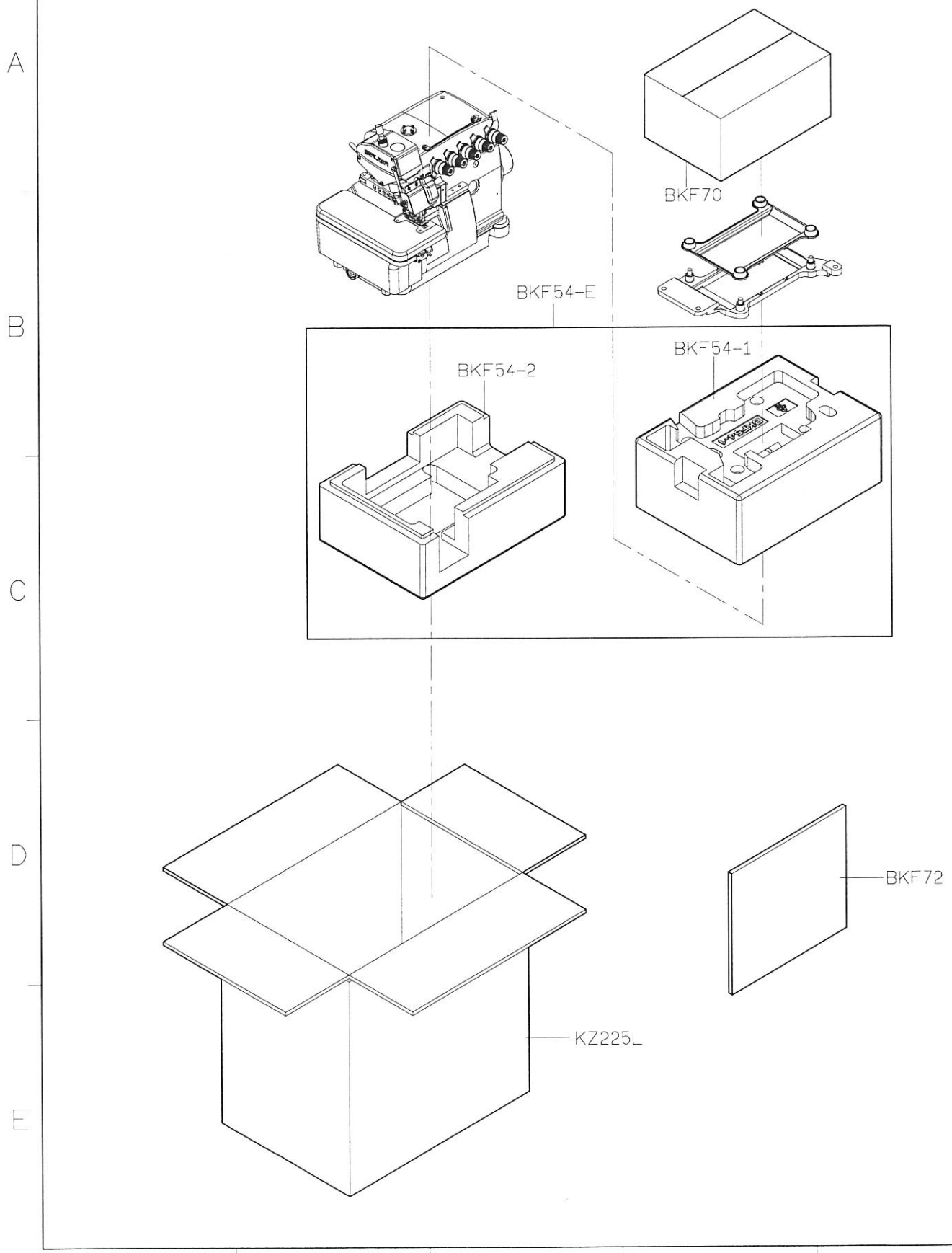

SIRUBA PARTS LIST	Series	Parts Group	Subclass / Remark	Page
	700L	EC-L1	● :Use for Long Knife	1/4
				Date
				2022/02/10

Option : ● Long Knife

●EC208 (For Long Knife)

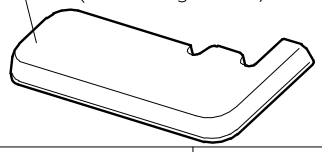

Long knife cut limit	22mm
Short knife cut limit	16mm

MODEL	EC	EC+BK	EC+GA
PARTS NO	EC202	EC215	EC215
		EC216	EC216
	SK290	SK285	SK285

1 2 3 4 5

SIRUBA PARTS LIST	Series	Parts Group	Subclass / Remark	Page
	700L	EC-L1		2/4
				Date
				2025/12/12

FE202-A

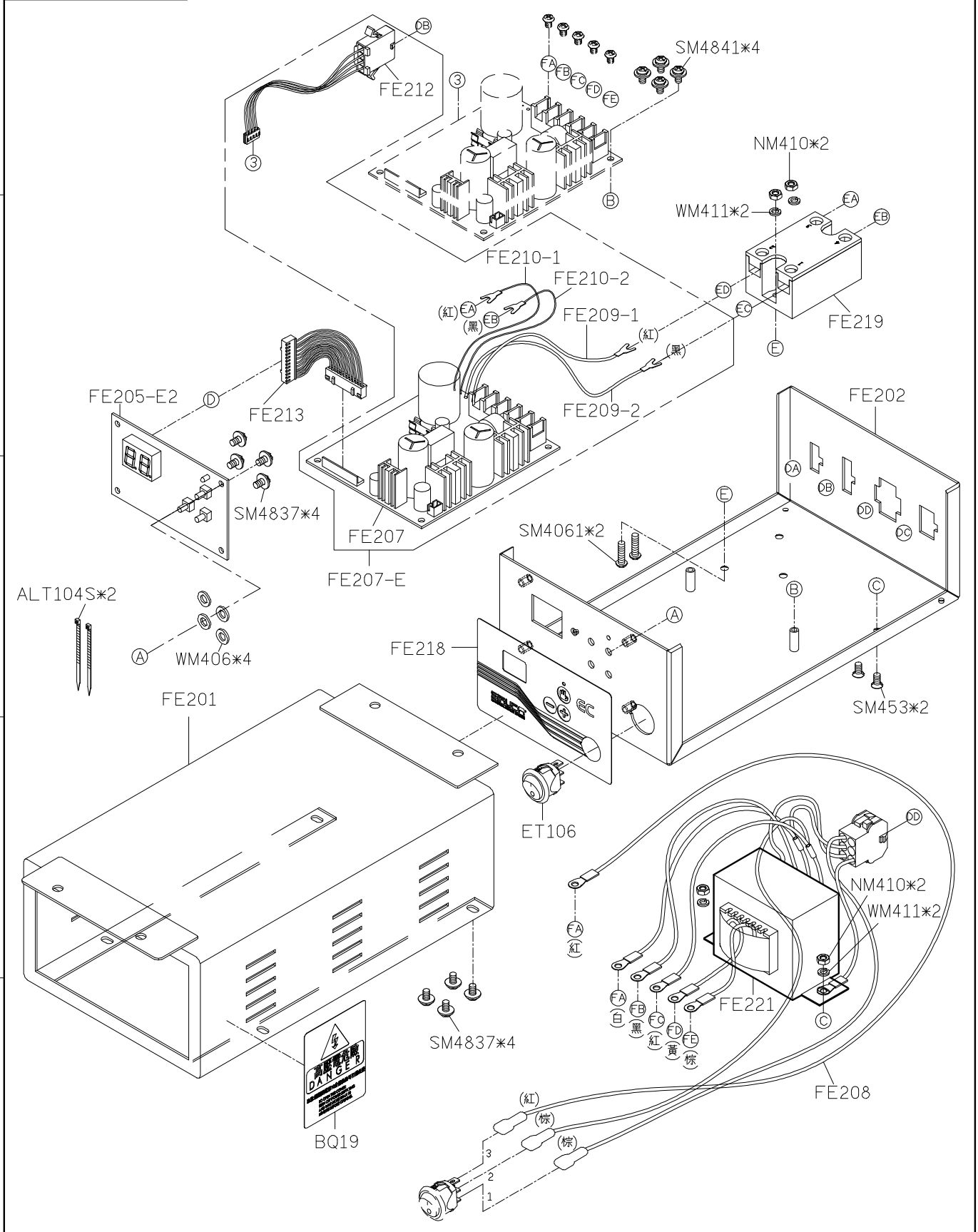

SIRUBA PARTS LIST	Series	Parts Group	Subclass / Remark	Page
	700L	EC-L1		3/4
				Date
				2021/09/10

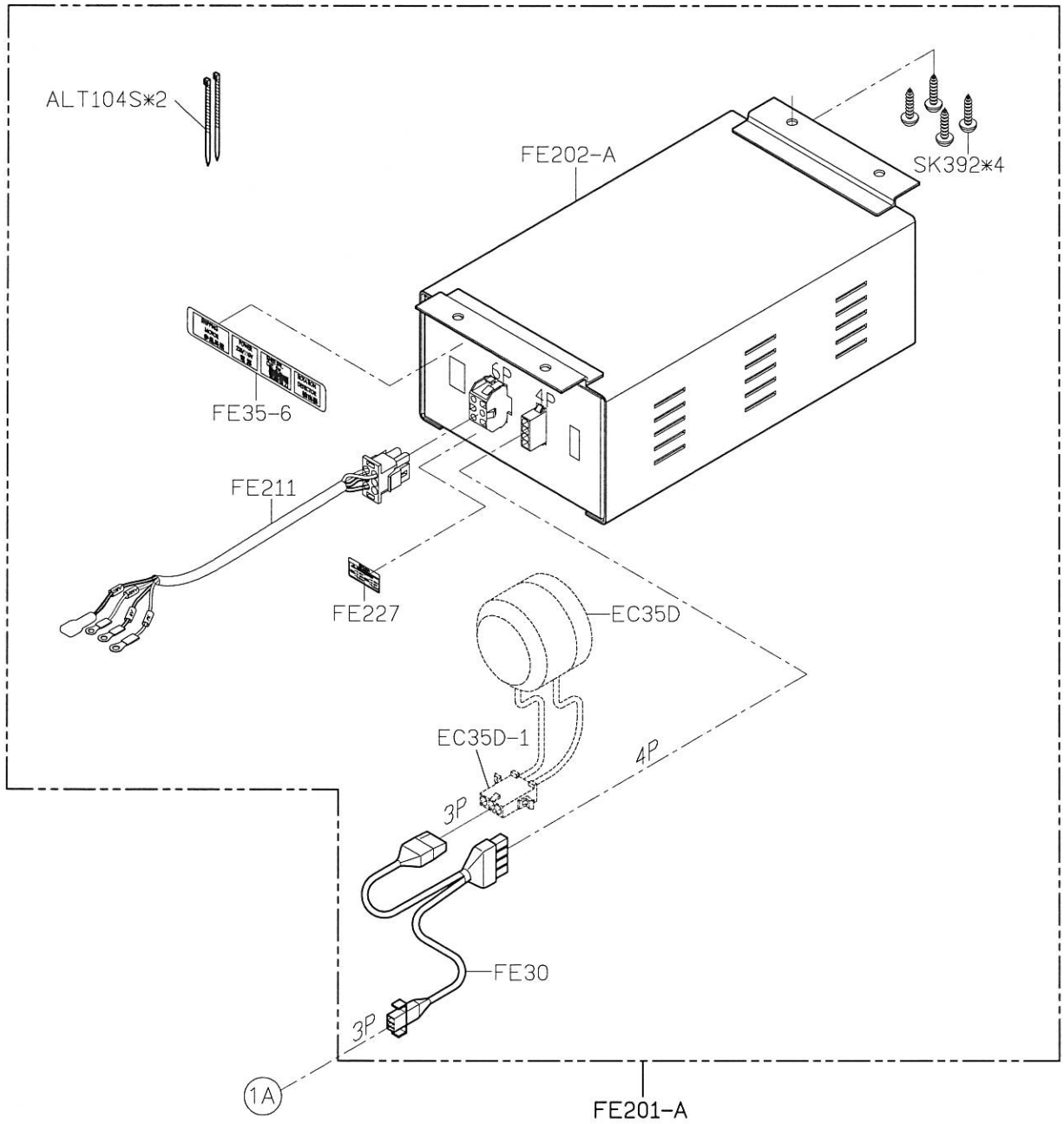

SIRUBA PARTS LIST	Series	Parts Group	Subclass / Remark	Page
	700L	EC-L1		4/4
				Date
				2026/03/06

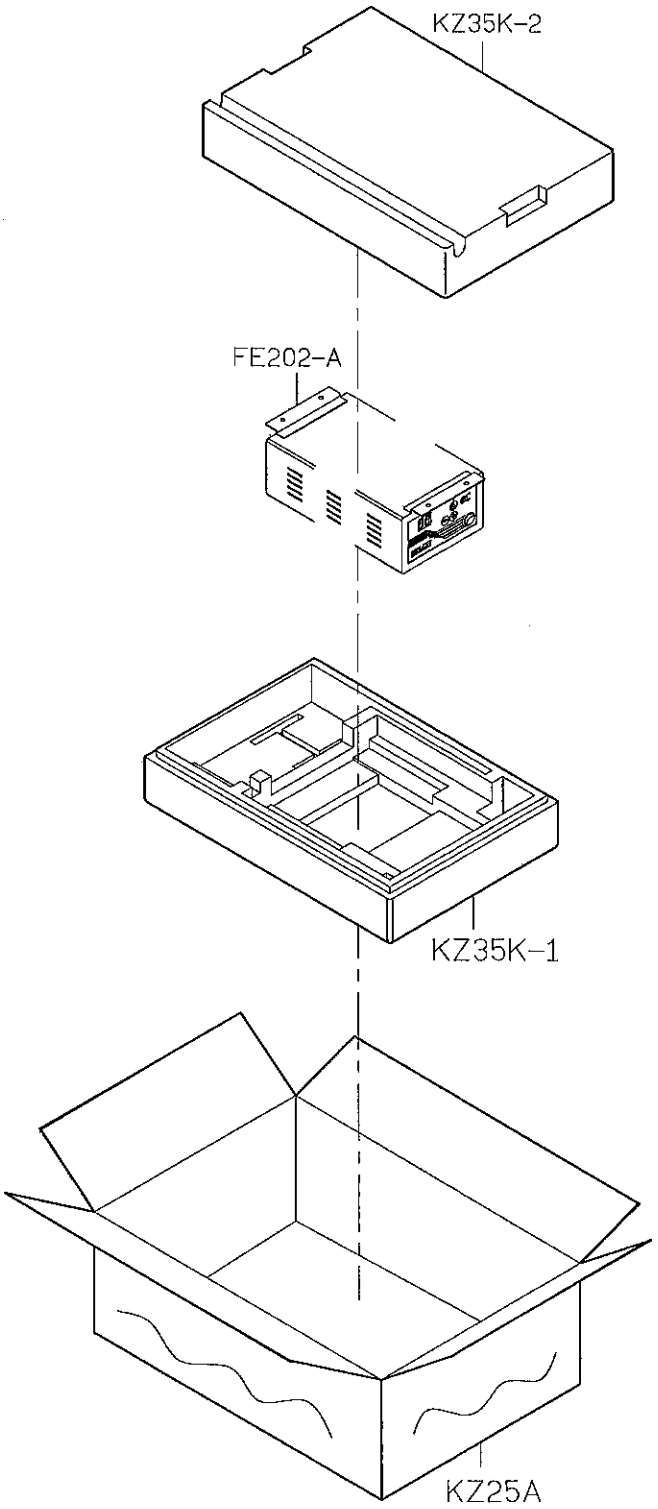

SIRUBA PARTS LIST	Series	Parts Group	Subclass / Remark	Page
	700K 700L	EC-U		1/3
				Date
				2021/09/07

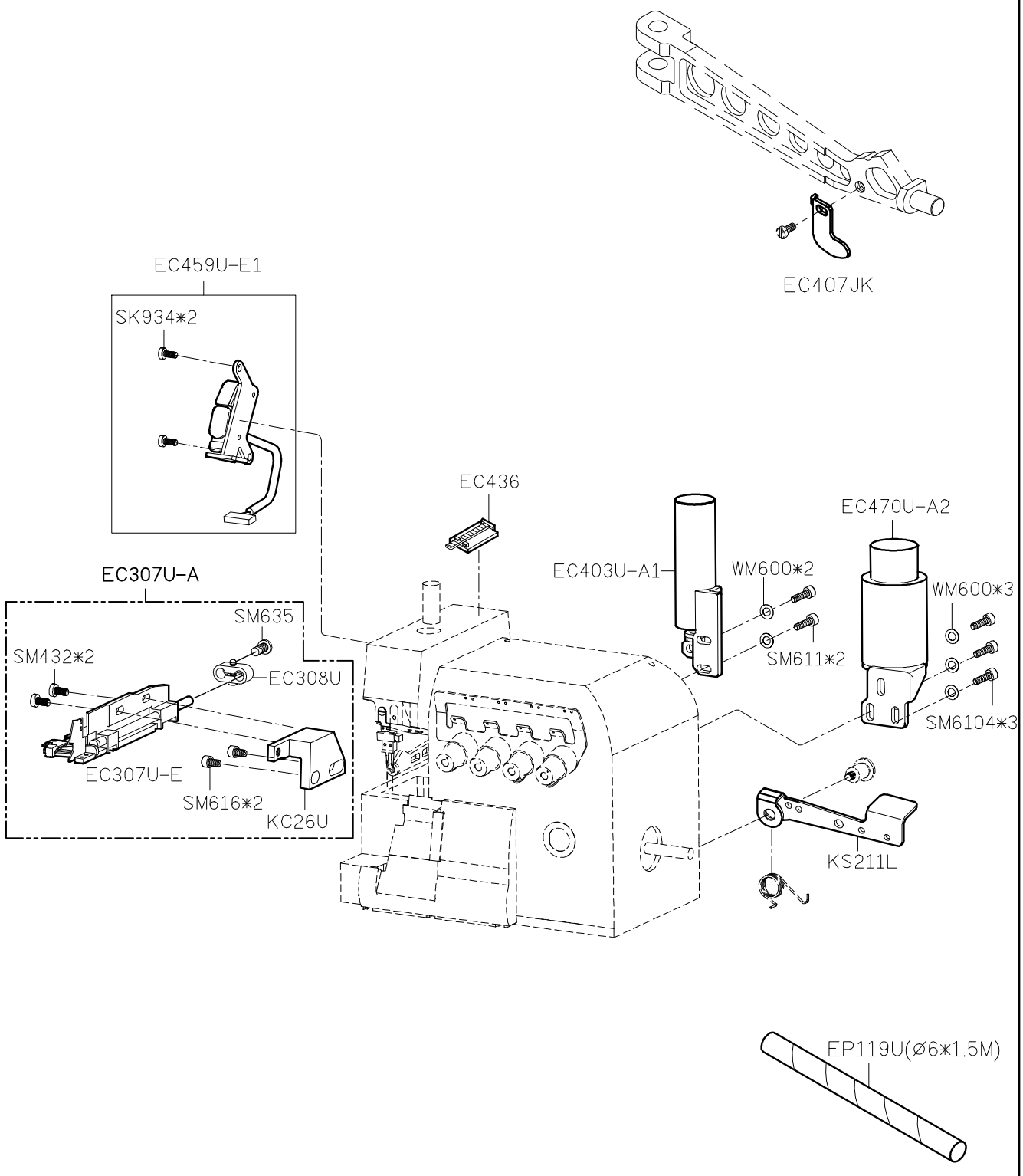

SIRUBA PARTS LIST	Series	Parts Group	Subclass / Remark	Page
	700K 700L	EC-U		2/3
				Date
				2020/07/14

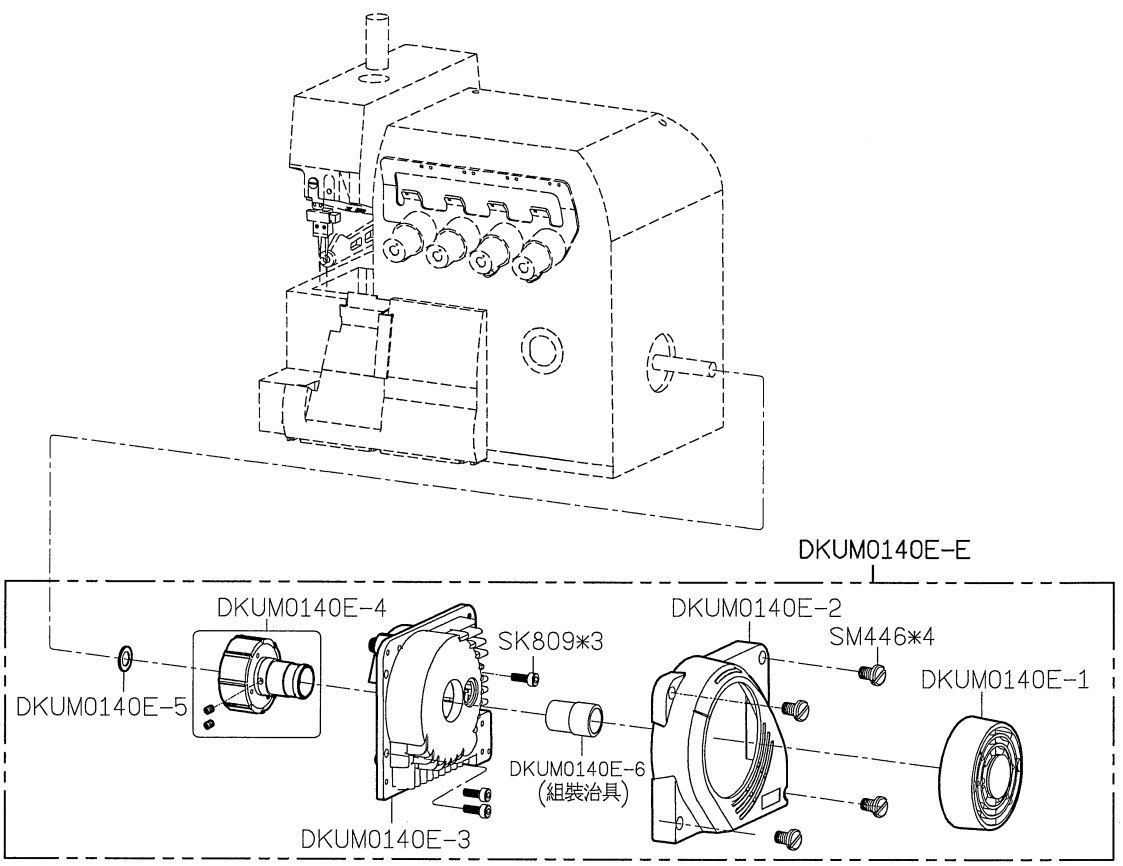

SIRUBA PARTS LIST	Series	Parts Group	Subclass / Remark	Page
	700K 700L	EC-U		3/3
				Date
				2020/07/14

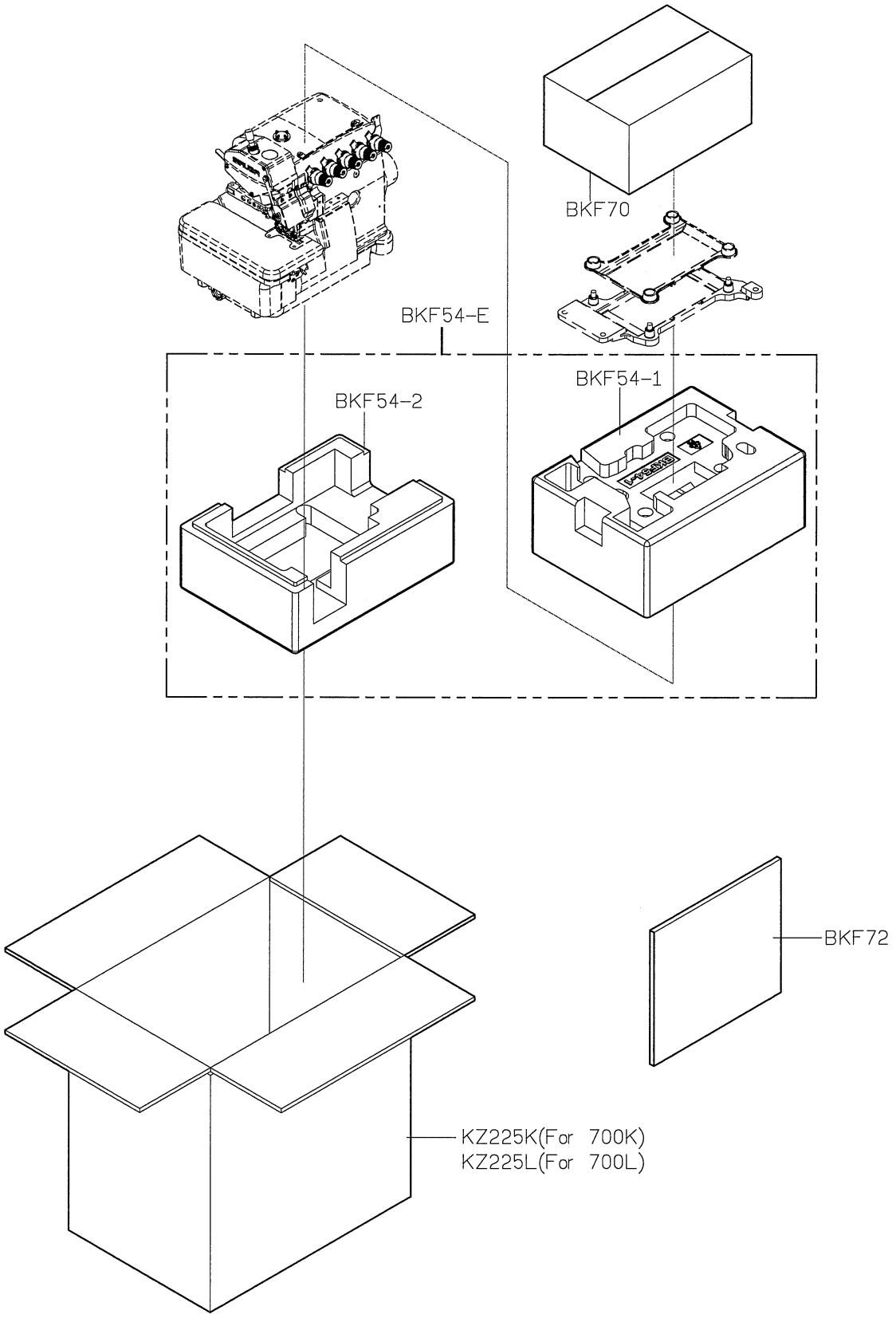

SIRUBA PARTS LIST	Series	Parts Group	Subclass / Remark	Page
	700L	ECA-L		1/5
				Date
				2021/12/01

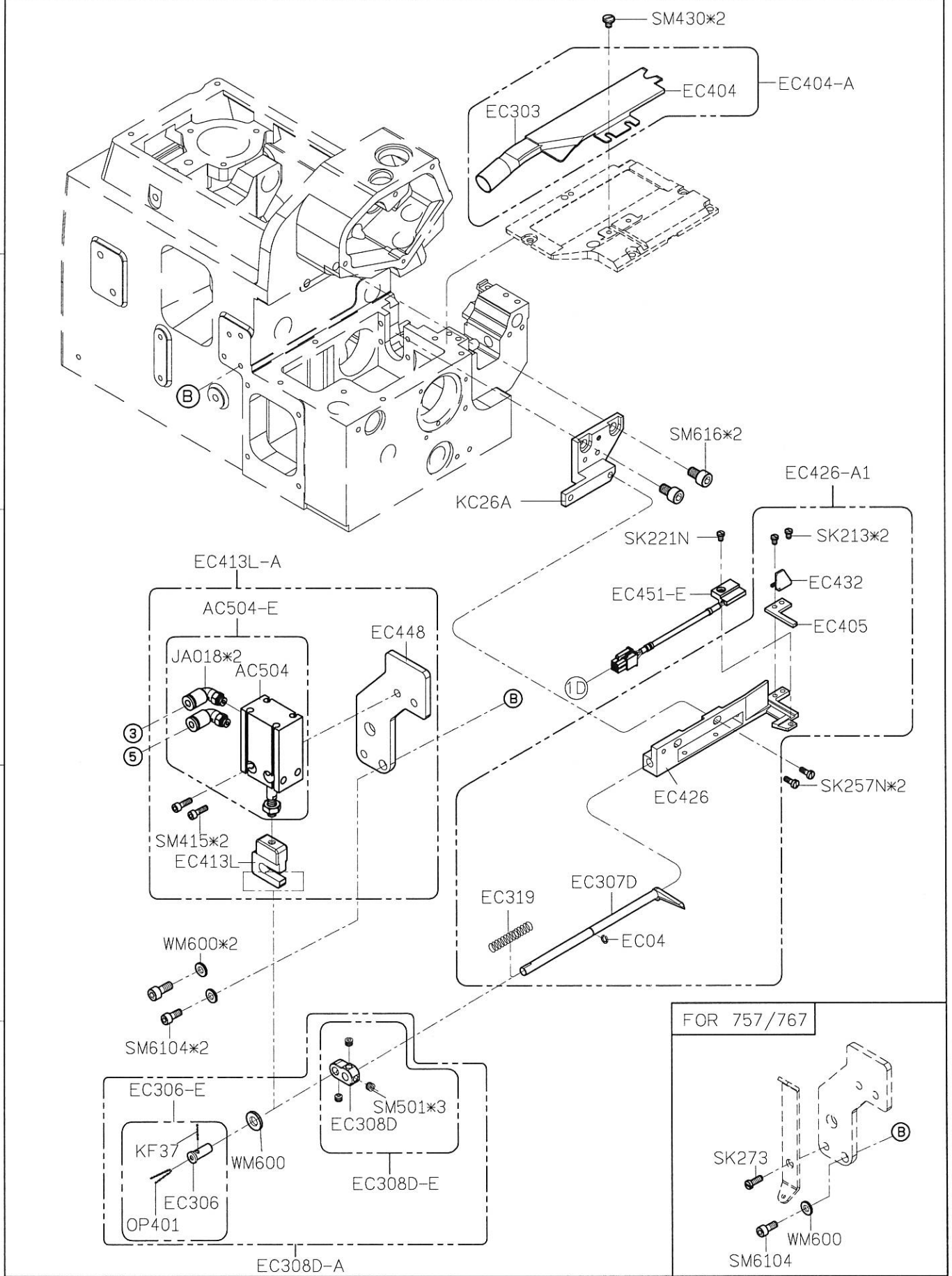

SIRUBA PARTS LIST	Series	Parts Group	Subclass / Remark	Page
	700L	ECA-L	*for TA device	2/5
				Date
				2025/06/09

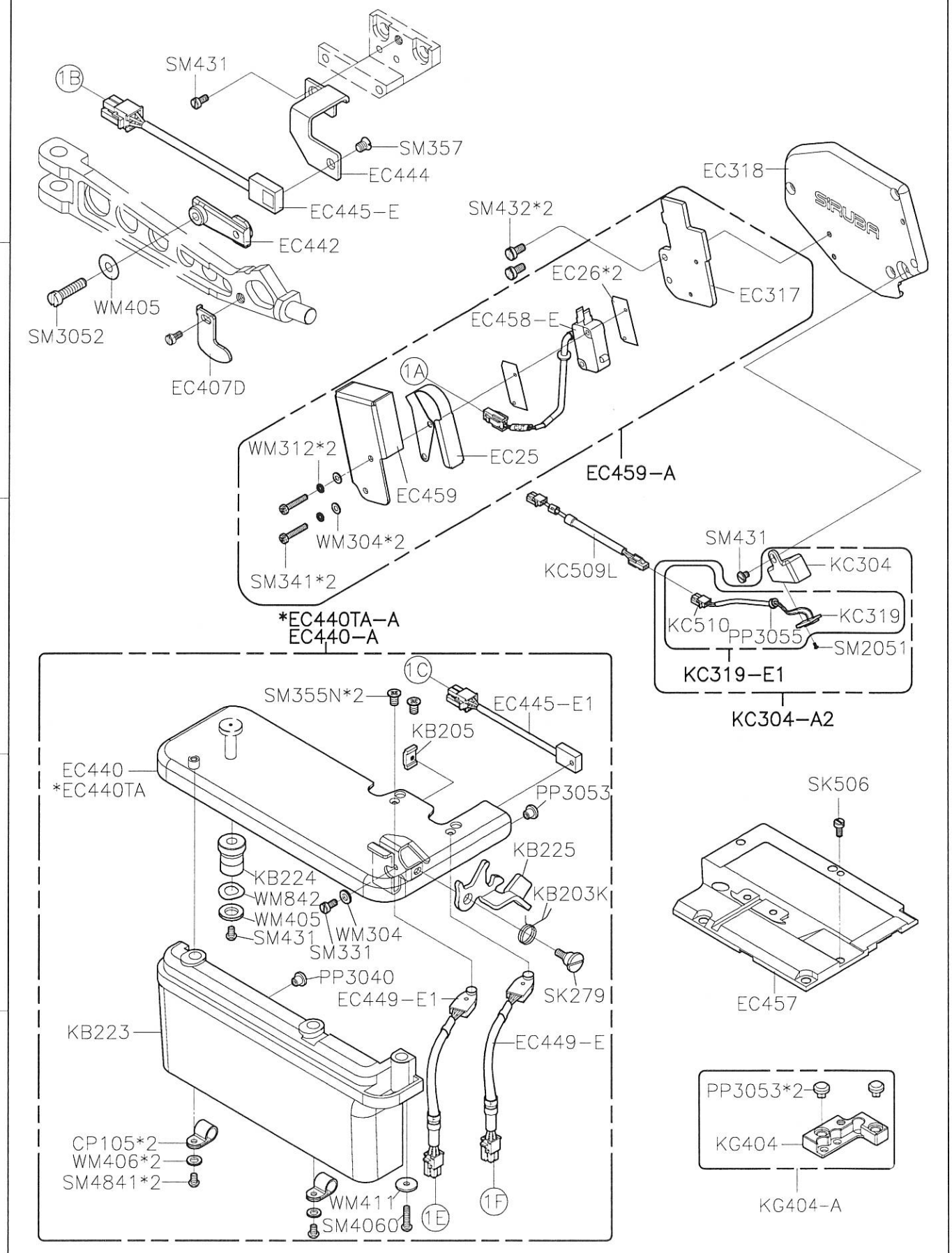

SIRUBA PARTS LIST	Series	Parts Group	Subclass / Remark	Page
	700L	ECA-L		3/5
				Date
				2022/12/19

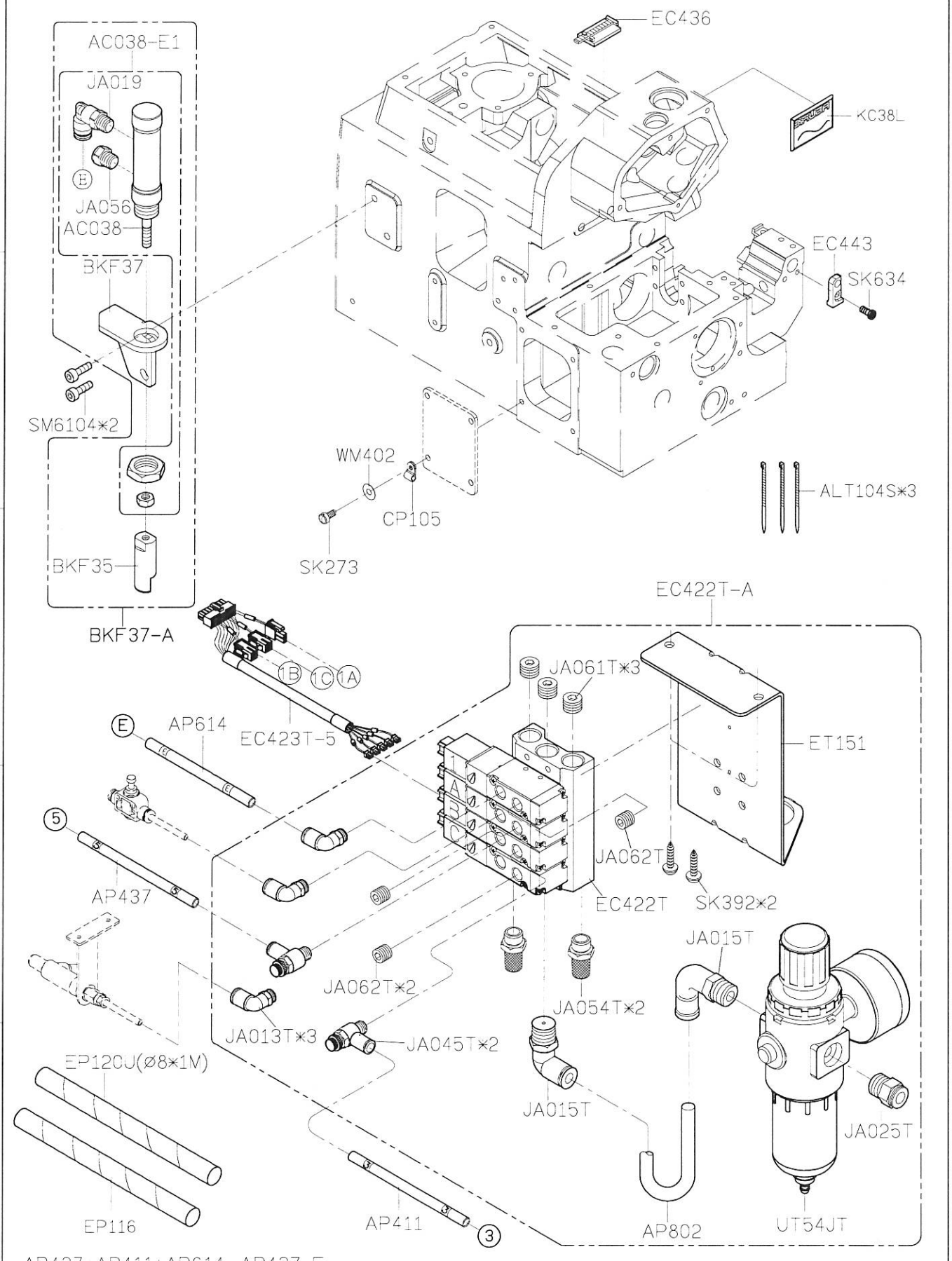

SIRUBA PARTS LIST	Series	Parts Group	Subclass / Remark	Page
	700L	ECA-L		4/5
				Date
				2021/12/01

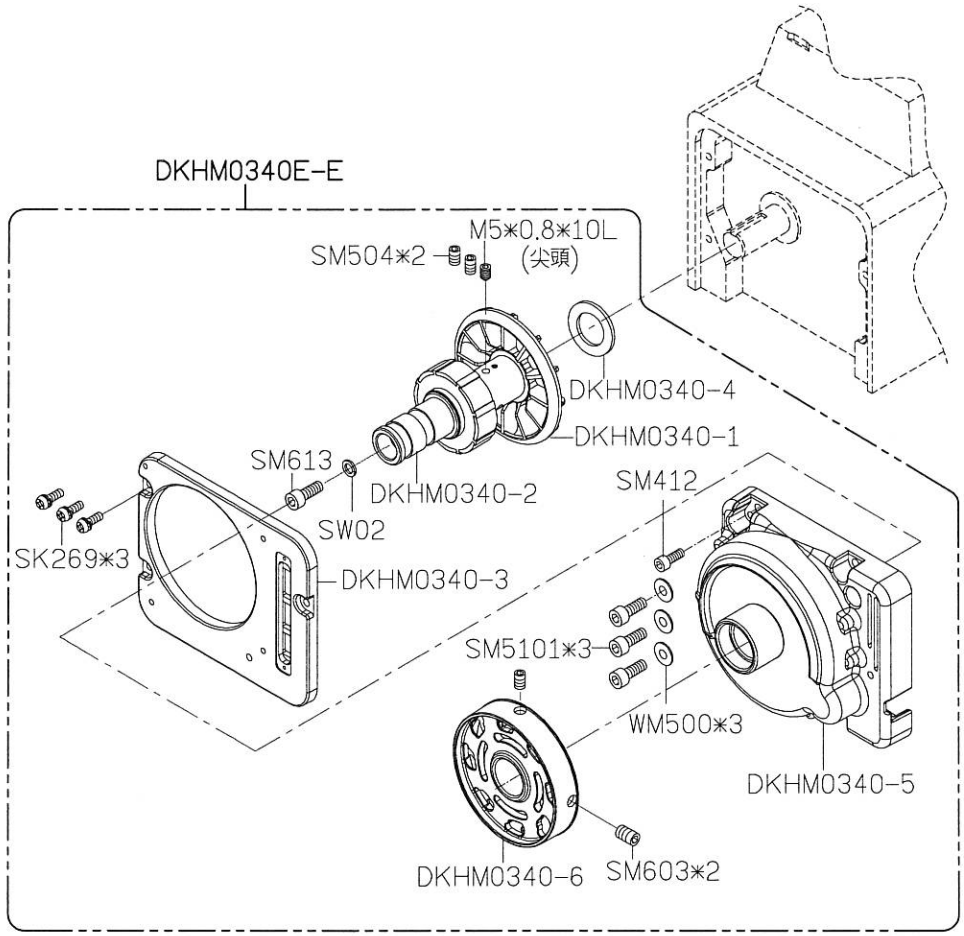

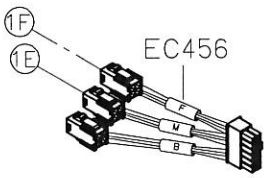

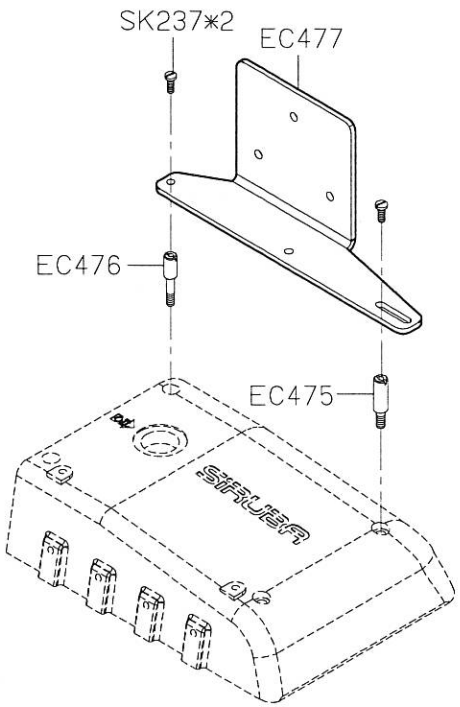

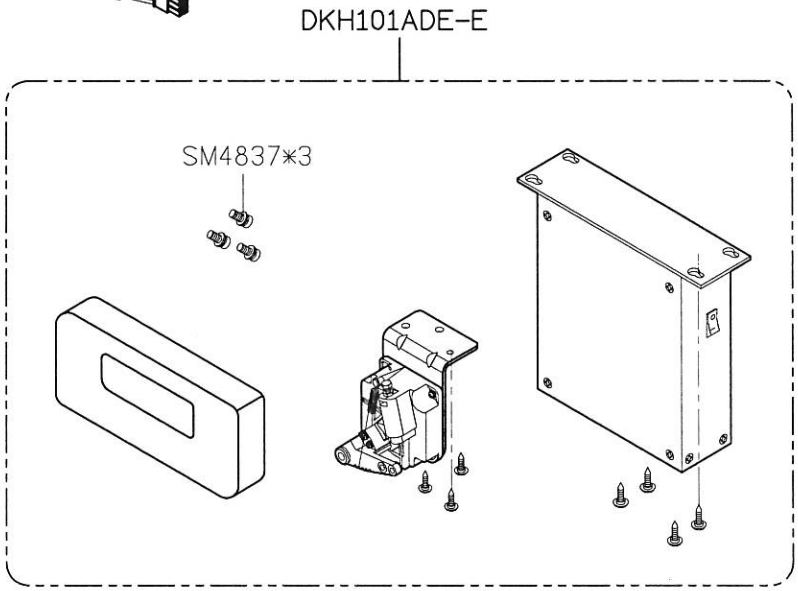

SiRUBA PARTS LIST	Series	Parts Group	Subclass / Remark	Page
	700L	ECA-L		5/5
				Date
				2021/12/01

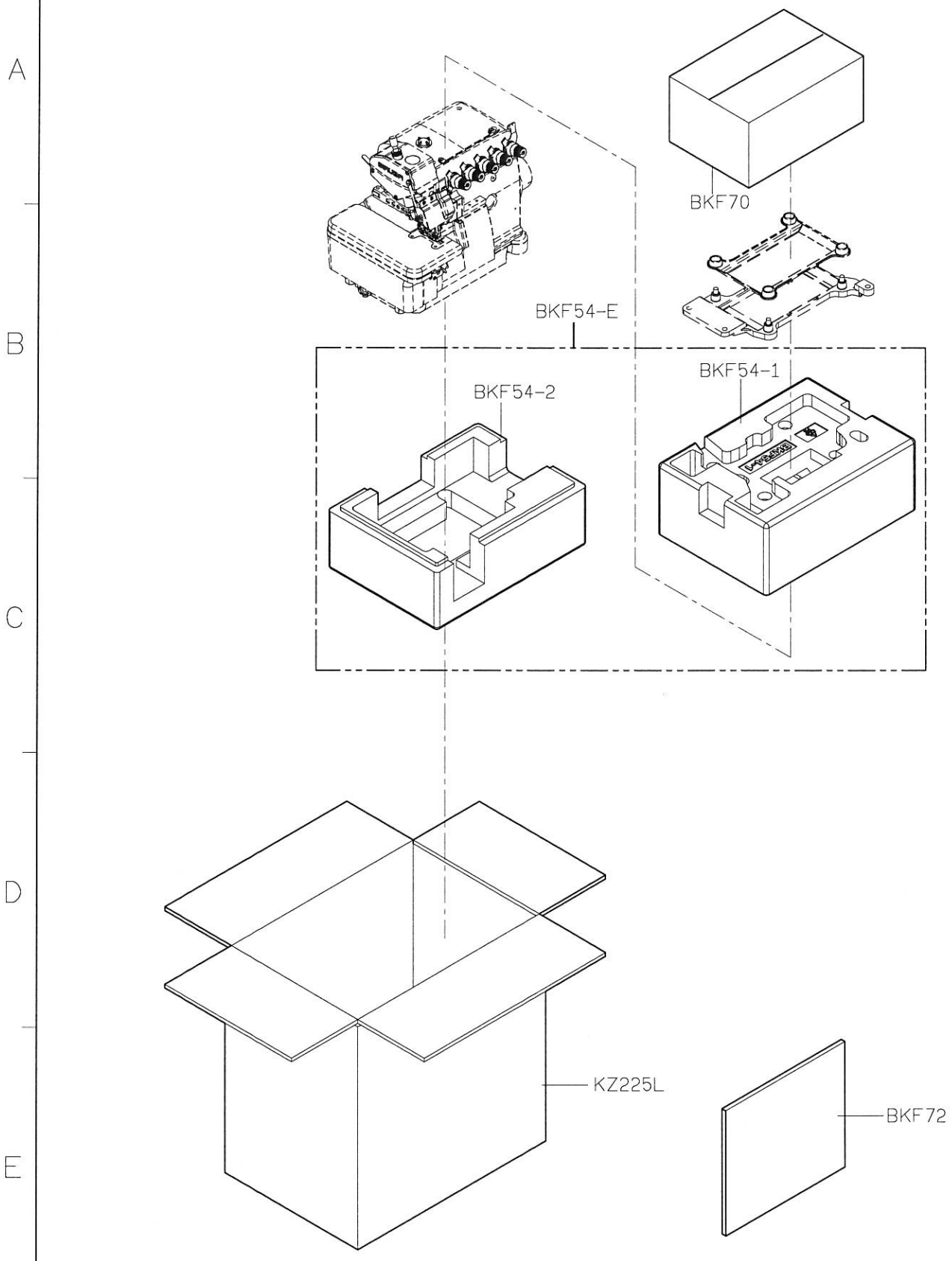

SIRUBA PARTS LIST	Series	Parts Group	Subclass / Remark	Page
	700K 700L	ECA-U	△FOR 757/767用	1/4
				Date
				2026/07/02

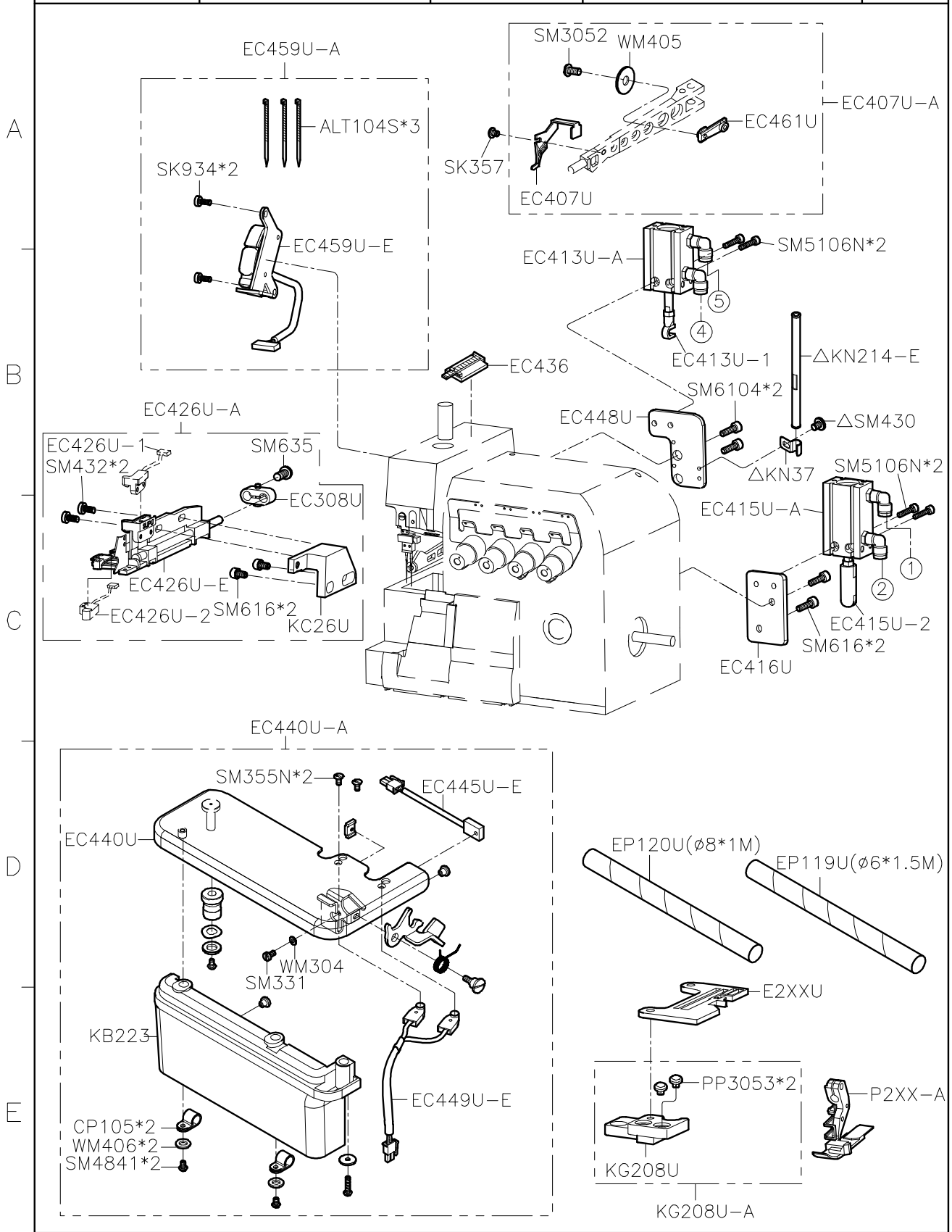

SiRUBA PARTS LIST	Series	Parts Group	Subclass / Remark	Page
	700K 700L	ECA-U	△FOR 700K用 *FOR 700L用	2/4 Date 2022/11/03

面膜	控制箱	使用語系
EC441U−1	DKU101ADE−E1	中文，英文
EC441U−3	DKU103ADE−E1	英文，越文

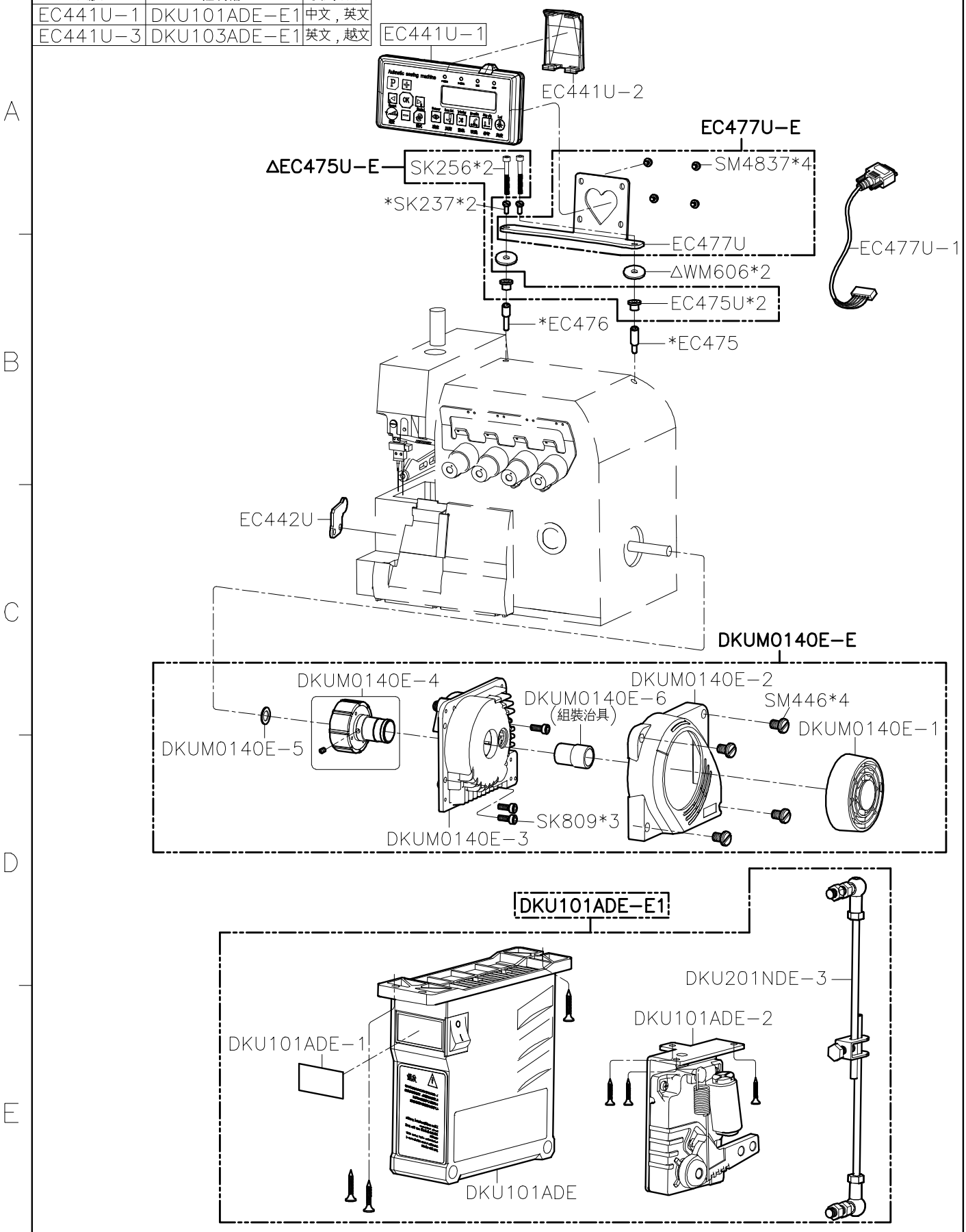

SIRUBA PARTS LIST	Series	Parts Group	Subclass / Remark	Page
	700K 700L	ECA-U		3/4
				Date
				2026/07/02

TUC－01

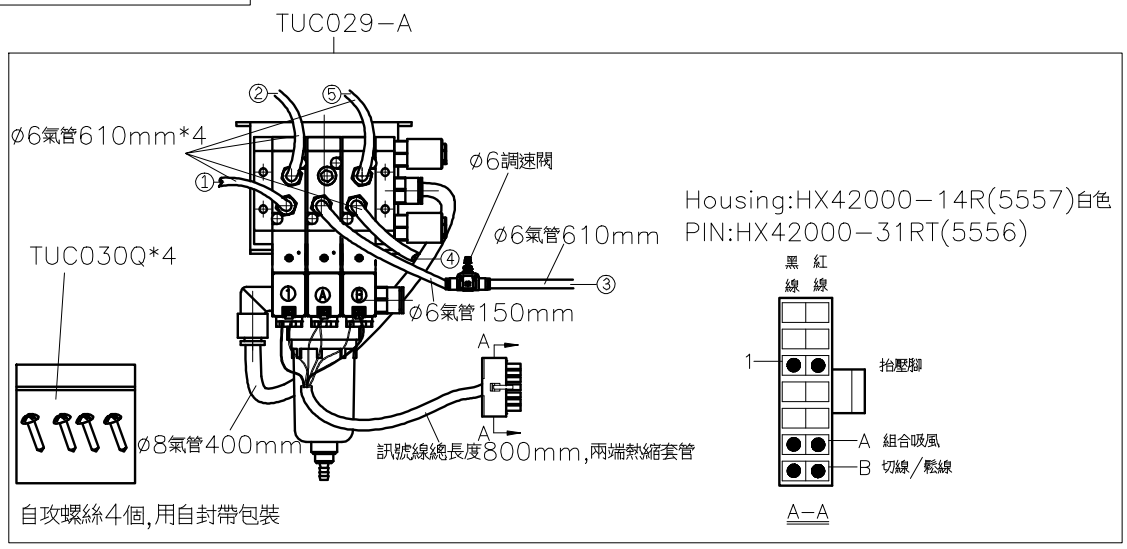

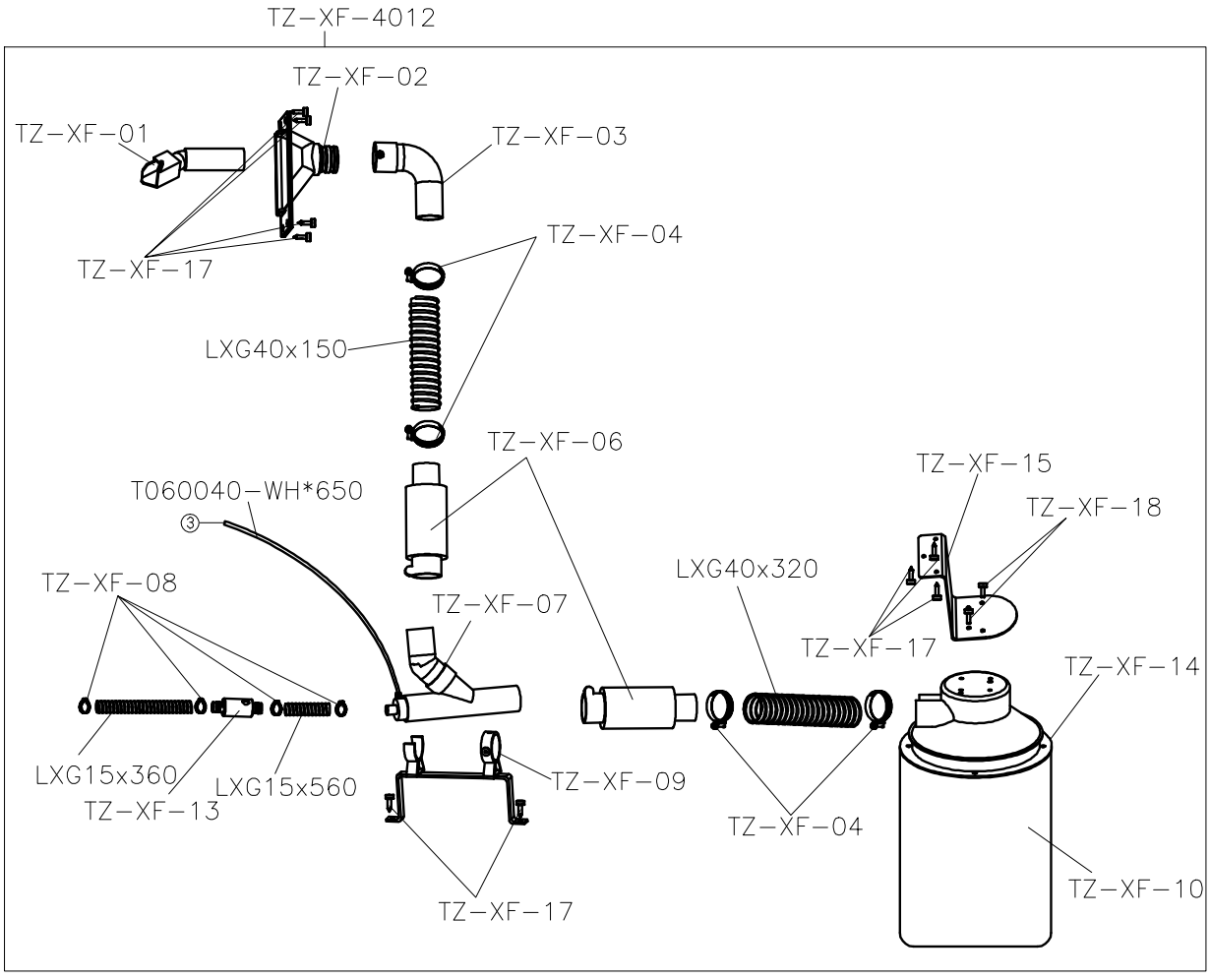

SIRUBA PARTS LIST	Series	Parts Group	Subclass / Remark	Page
	700K 700L	ECA-U		4/4
				Date
				2018/09/27

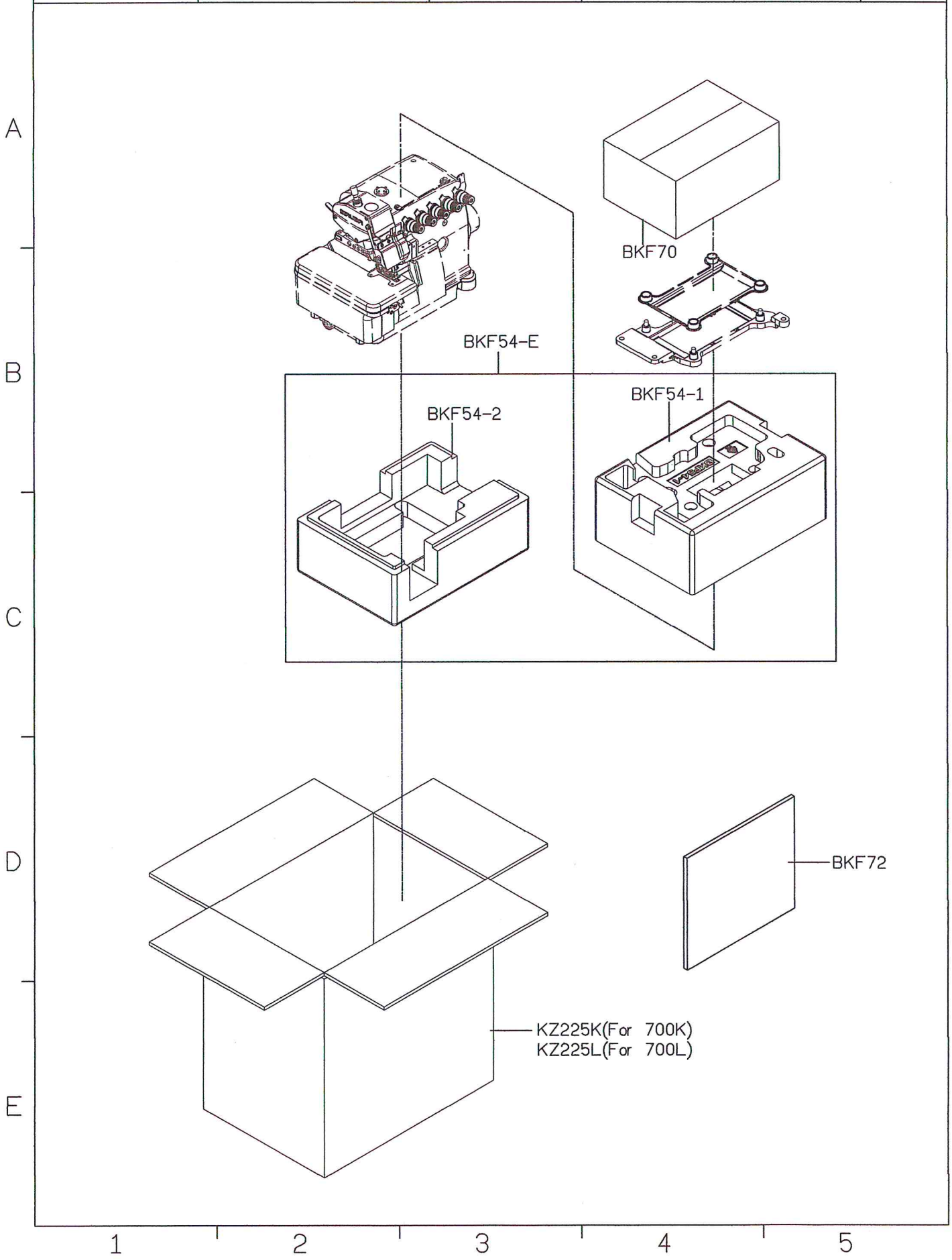

SIRUBA PARTS LIST	Series	Parts Group	Subclass / Remark	Page
	700L	ECA-P	For IOT	1/5
				Date
				2023/08/30

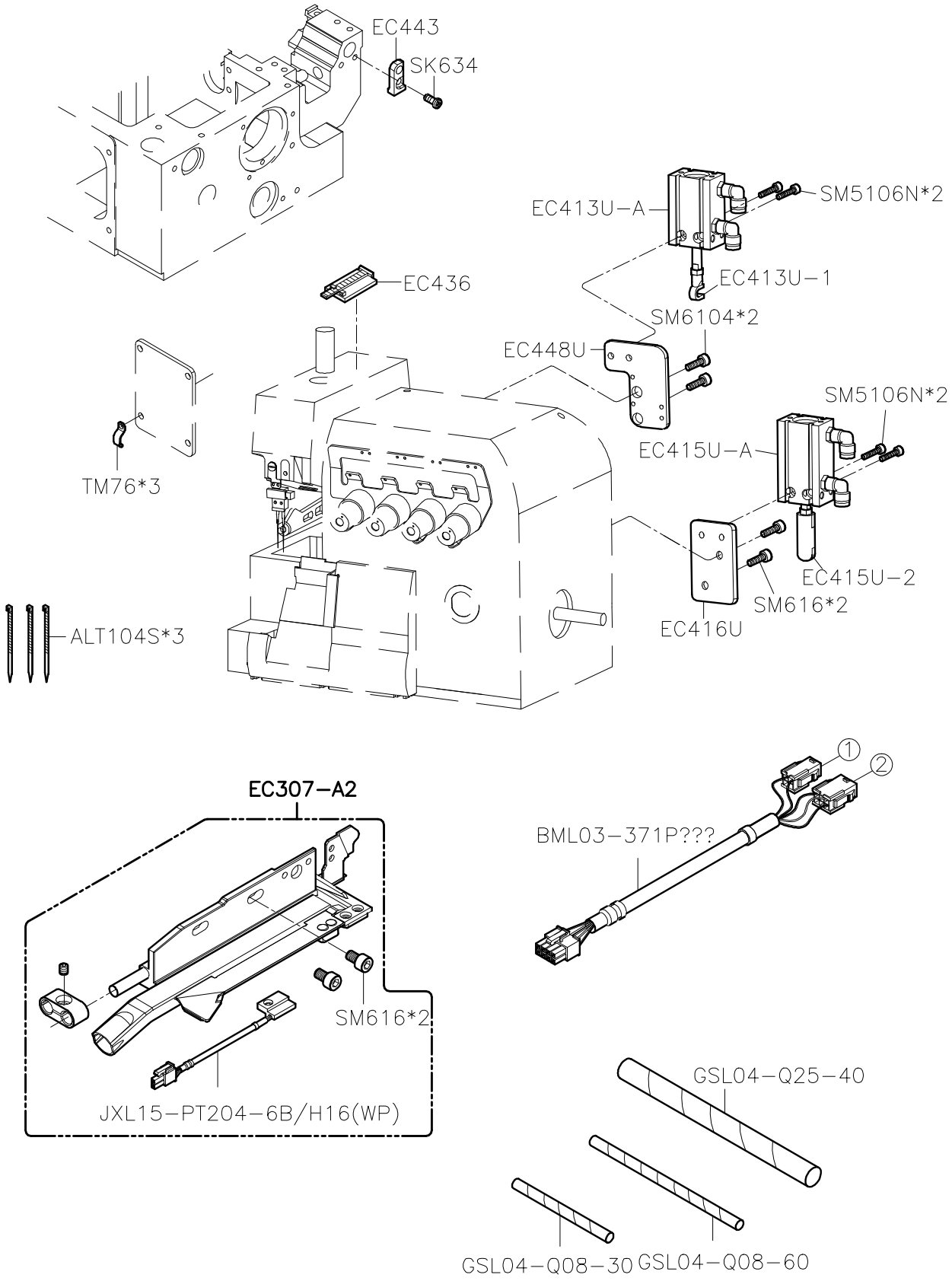

SIRUBA PARTS LIST	Series	Parts Group	Subclass / Remark	Page
	700L	ECB-L		1/5
				Date
				2021/12/01

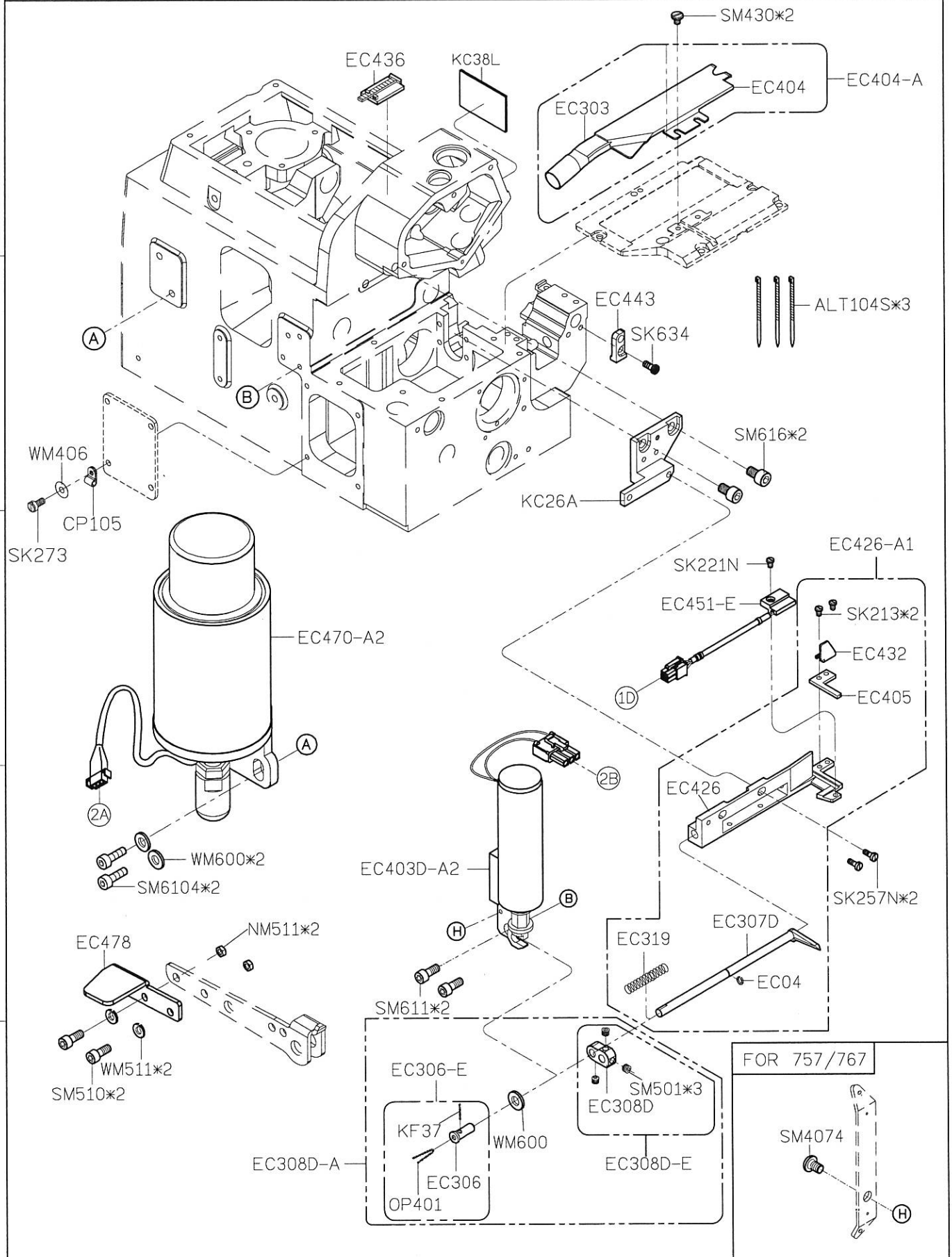

SIRUBA	Series	Parts Group	Subclass / Remark	Page
PARTS LIST	700L	ECB-L		2/5
				Date
				2025/06/09

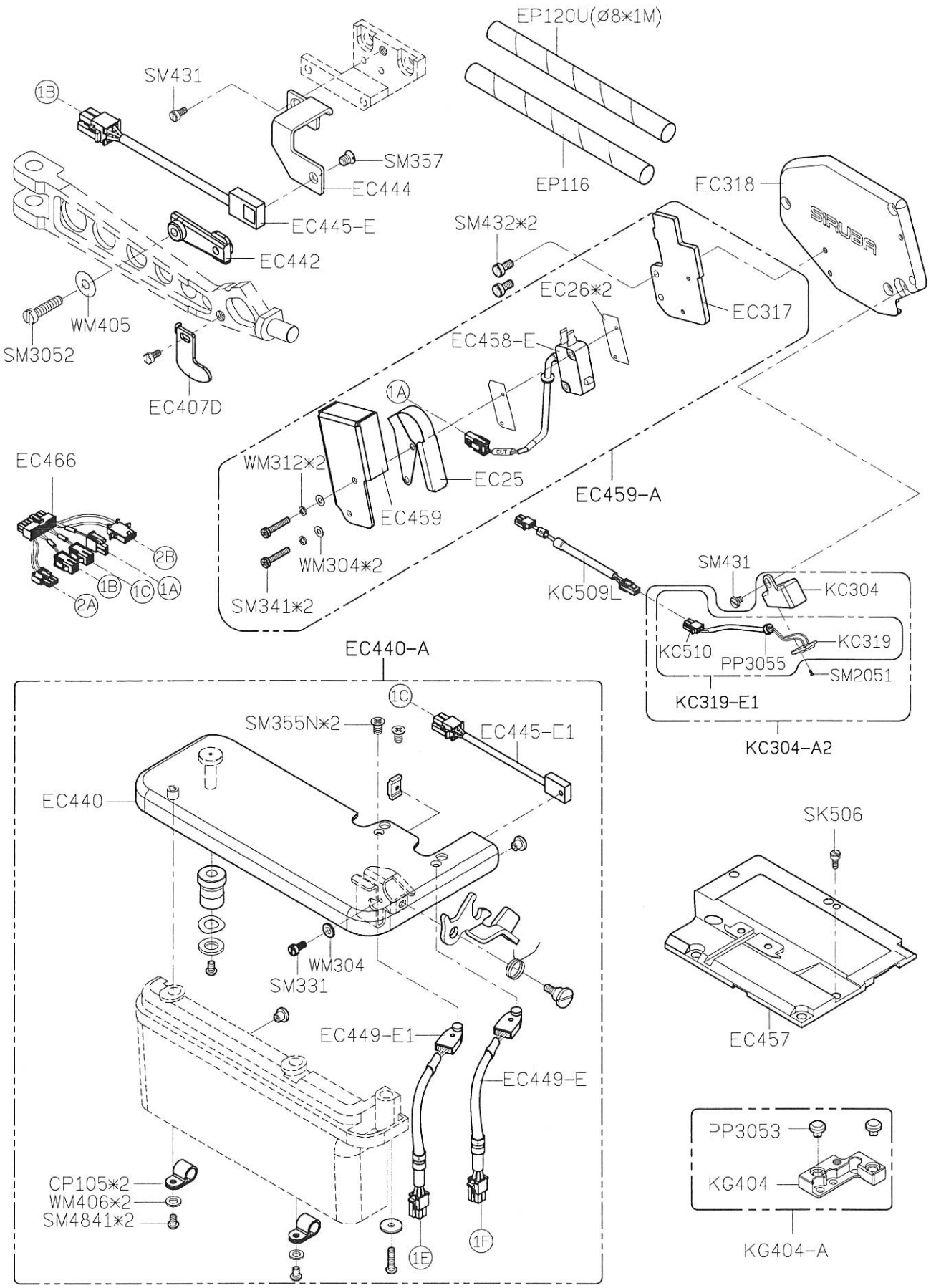

SIRUBA PARTS LIST	Series	Parts Group	Subclass / Remark	Page
	700L	ECB-L		3/5
				Date
				2021/12/01

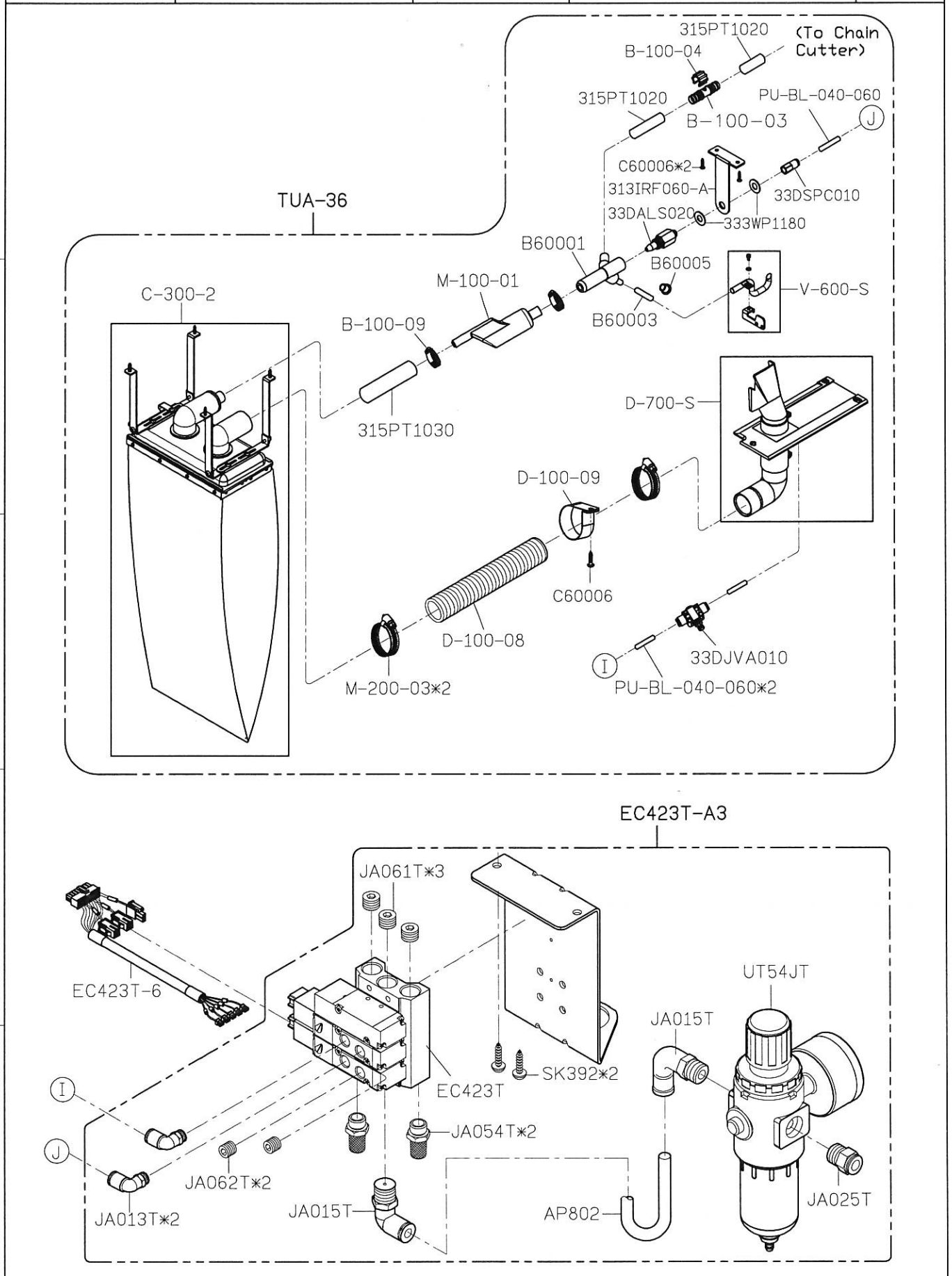

SIRUBA PARTS LIST	Series	Parts Group	Subclass / Remark	Page
	700L	ECB-L		4/5
				Date
				2021/12/01

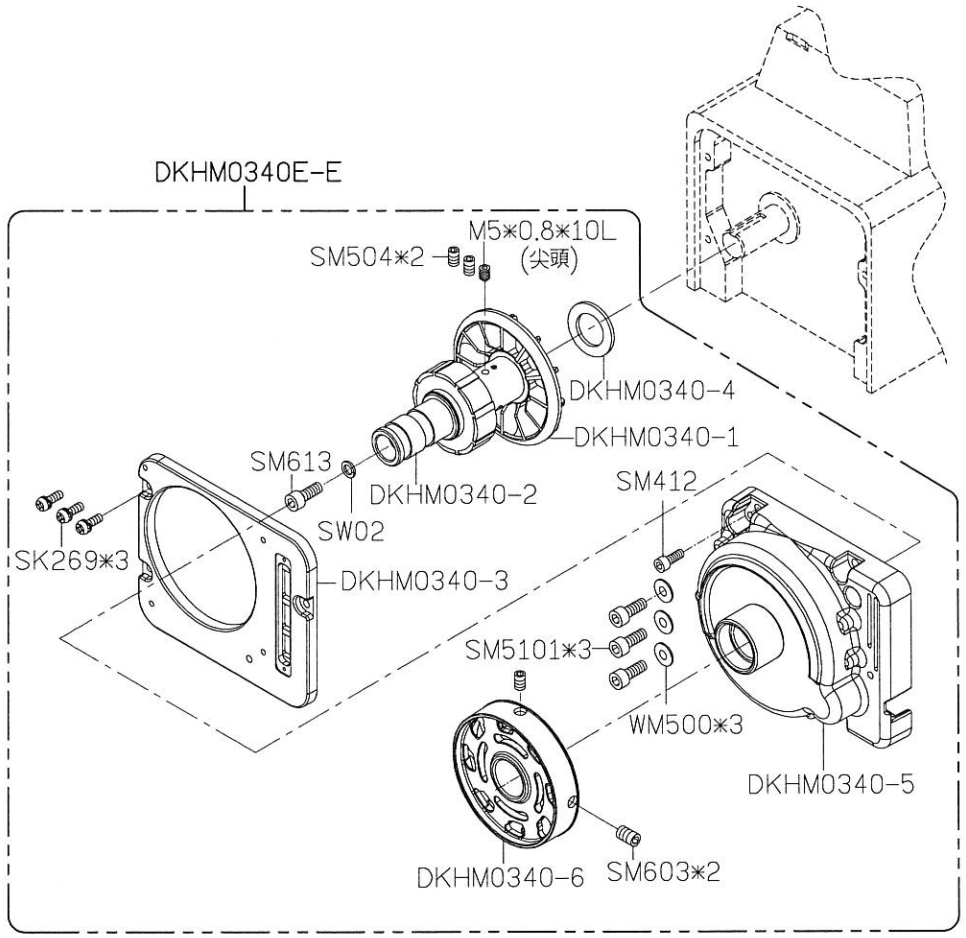

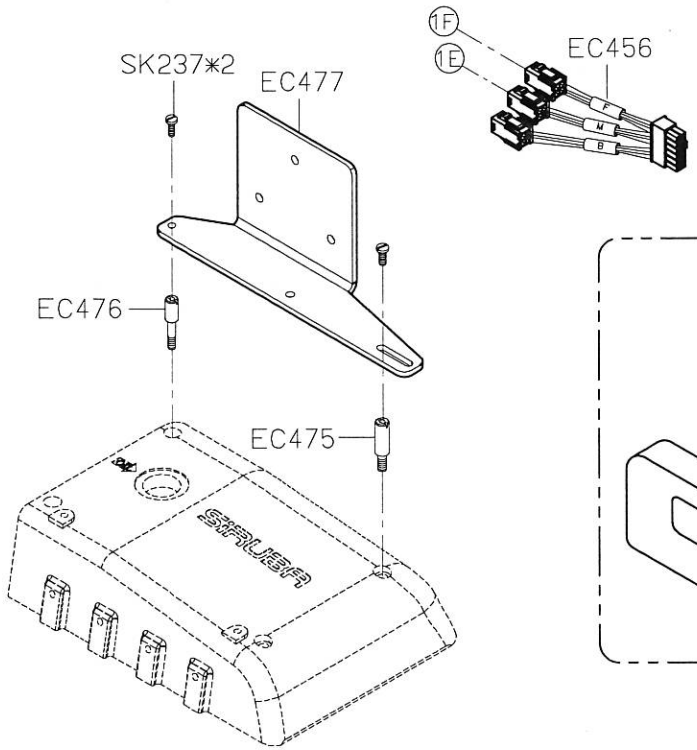

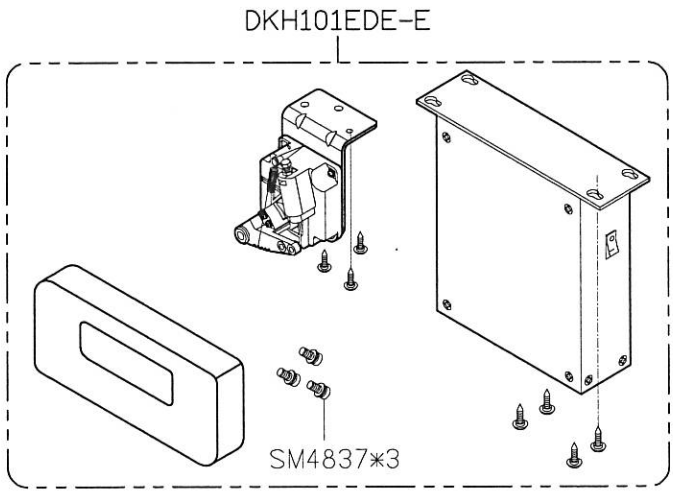

SIRUBA PARTS LIST	Series	Parts Group	Subclass / Remark	Page
	700L	ECB-L		5/5
				Date
				2021/12/01

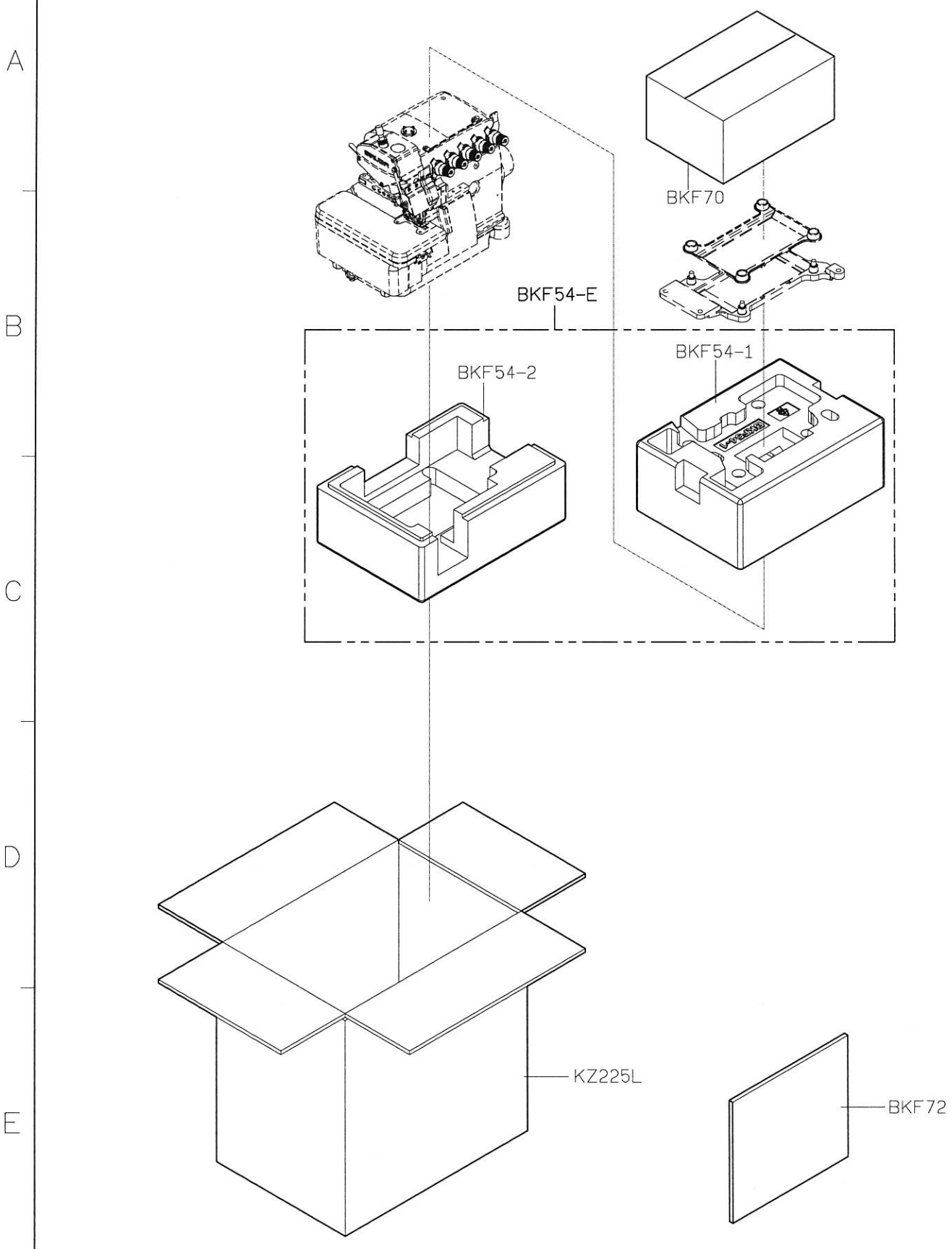

SIRUBA PARTS LIST	Series	Parts Group	Subclass / Remark	Page
	700K 700L	ECB-U	△FOR 757/767用	1/4
				Date
				2022/10/11

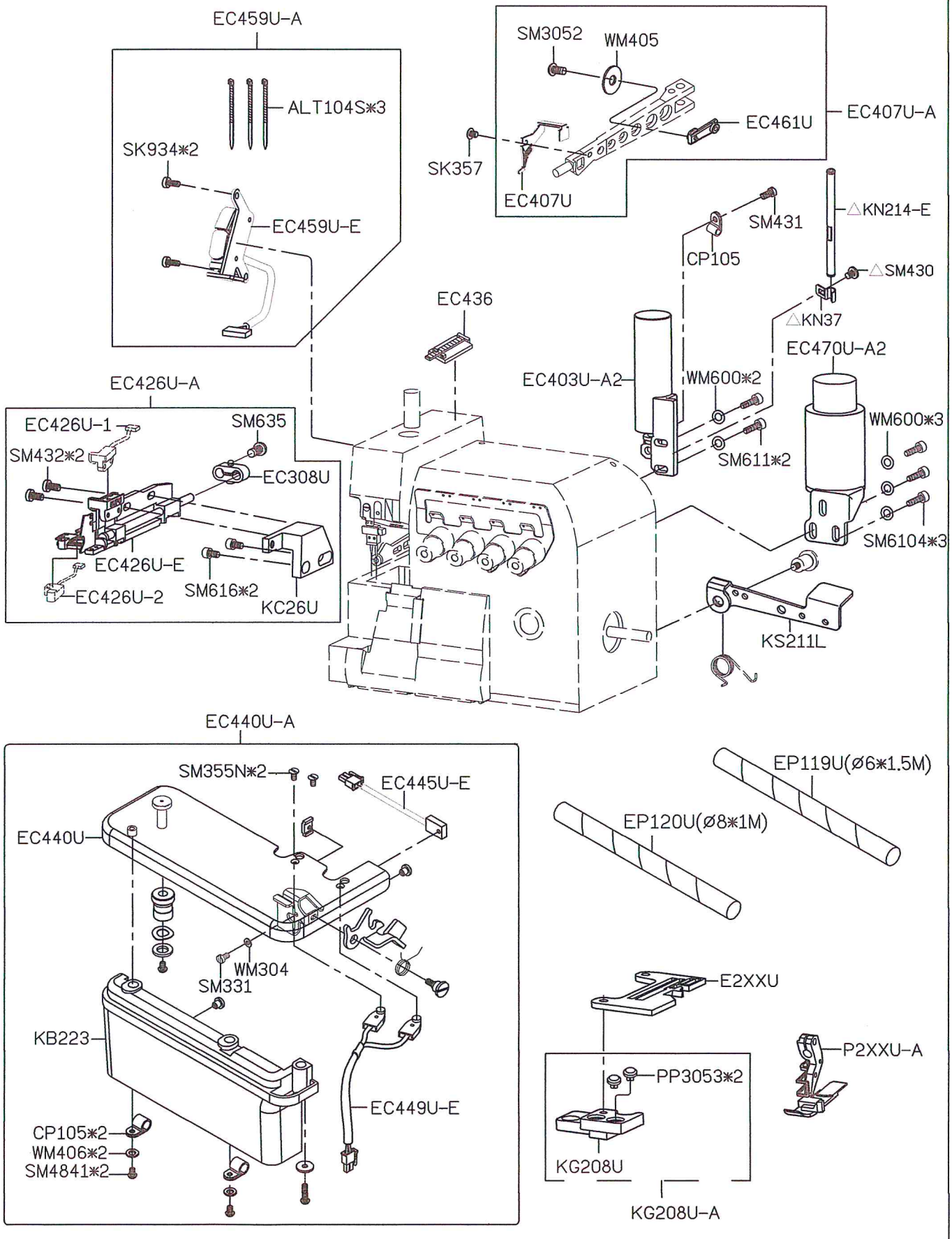

SiRUBA PARTS LIST	Series	Parts Group	Subclass / Remark	Page
	700K 700L	ECB-U	△FOR 700K用 *FOR 700L用	2/4 Date 2022/11/03

面膜	控制箱	使用語系
EC441U－1	DKU101ADE－E1	中文，英文
EC441U－3	DKU103ADE－E1	英文，越文

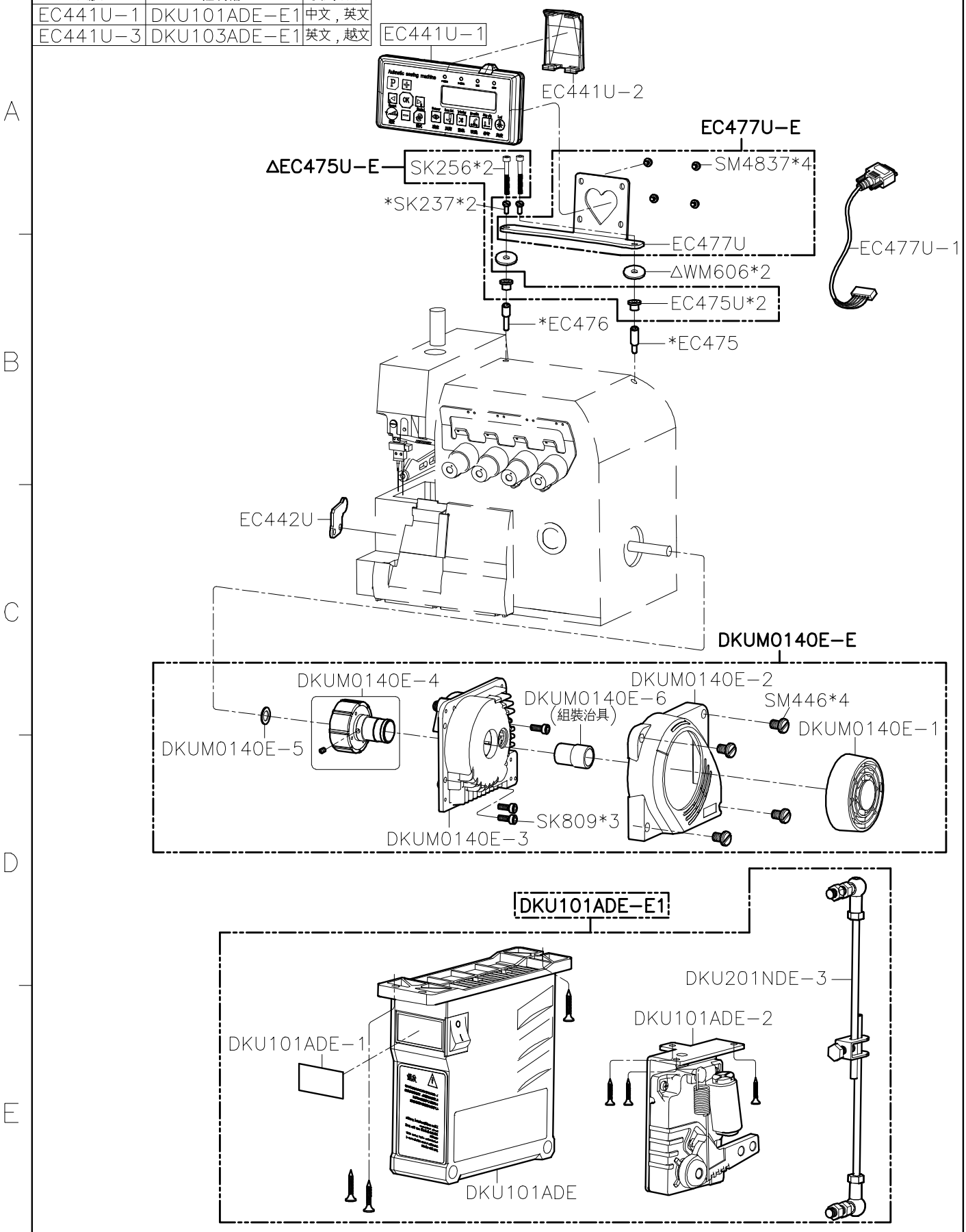

SIRUBA PARTS LIST	Series	Parts Group	Subclass / Remark	Page
	700K 700L	ECB-U		3/4
				Date
				2022/10/08

TUC-02

Housing:H6657R1-02
PIN:6657TP

腳 序	顏 色	備 註
1	白	30V(吸風)
2	黑	(吸風)

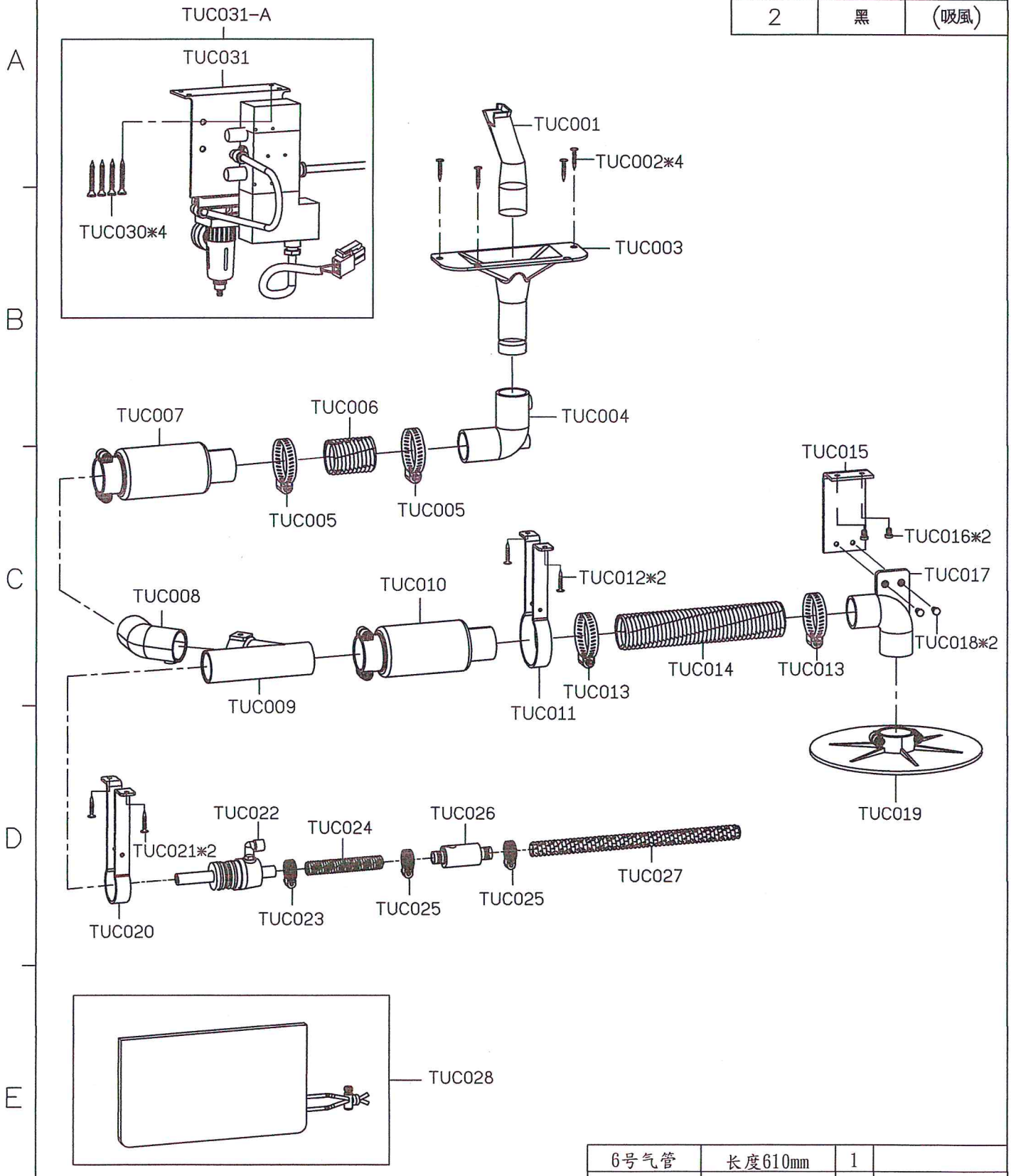

品名	規格尺寸	數量	備注
6号气管	长度610mm	1	
8号气管	长度220mm	1	

SIRUBA PARTS LIST	Series	Parts Group	Subclass / Remark	Page
	700K 700L	ECB-U		4/4
				Date
				2018/09/27

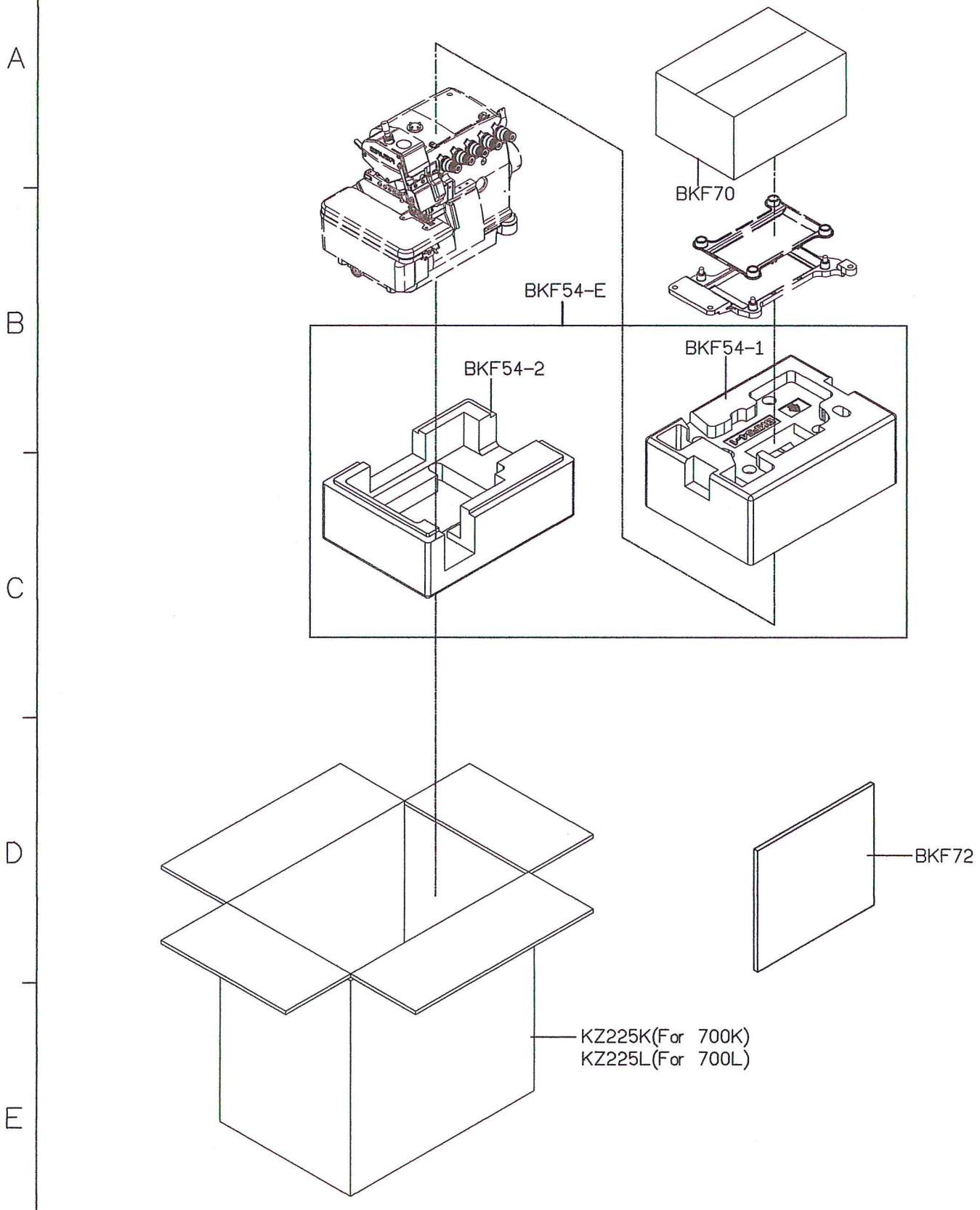

SIRUBA	Series	Parts Group	Subclass / Remark	Page
PARTS LIST	700L	GA-L		1/1
				Date
				2017/06/07

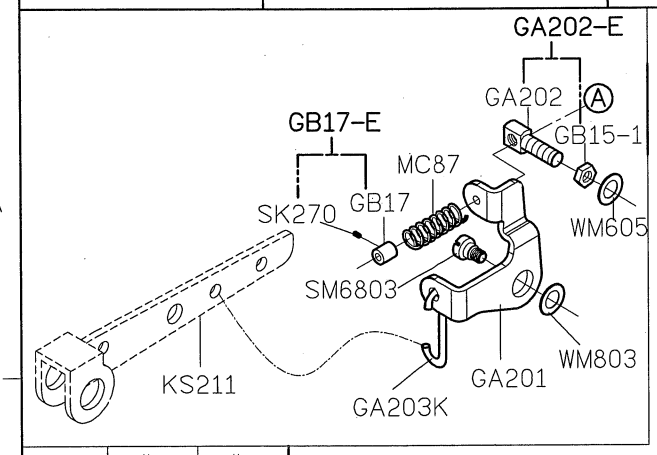

MODEL	#4	#5
PARTS NO	KV16	KV17

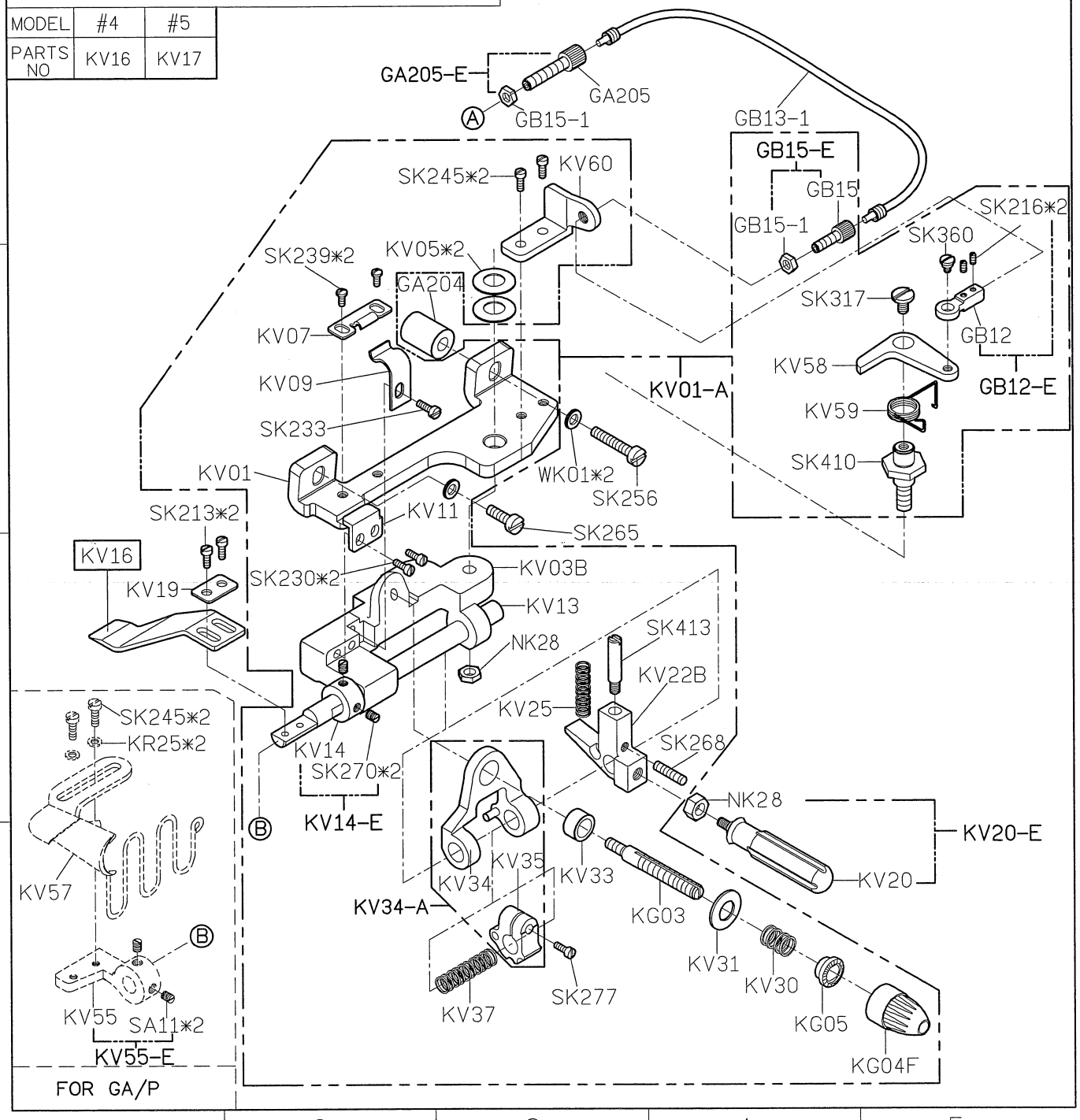

SIRUBA PARTS LIST	Series	Parts Group	Subclass / Remark	Page
	700L	GAL-L		1/1
				Date
				2017/06/07

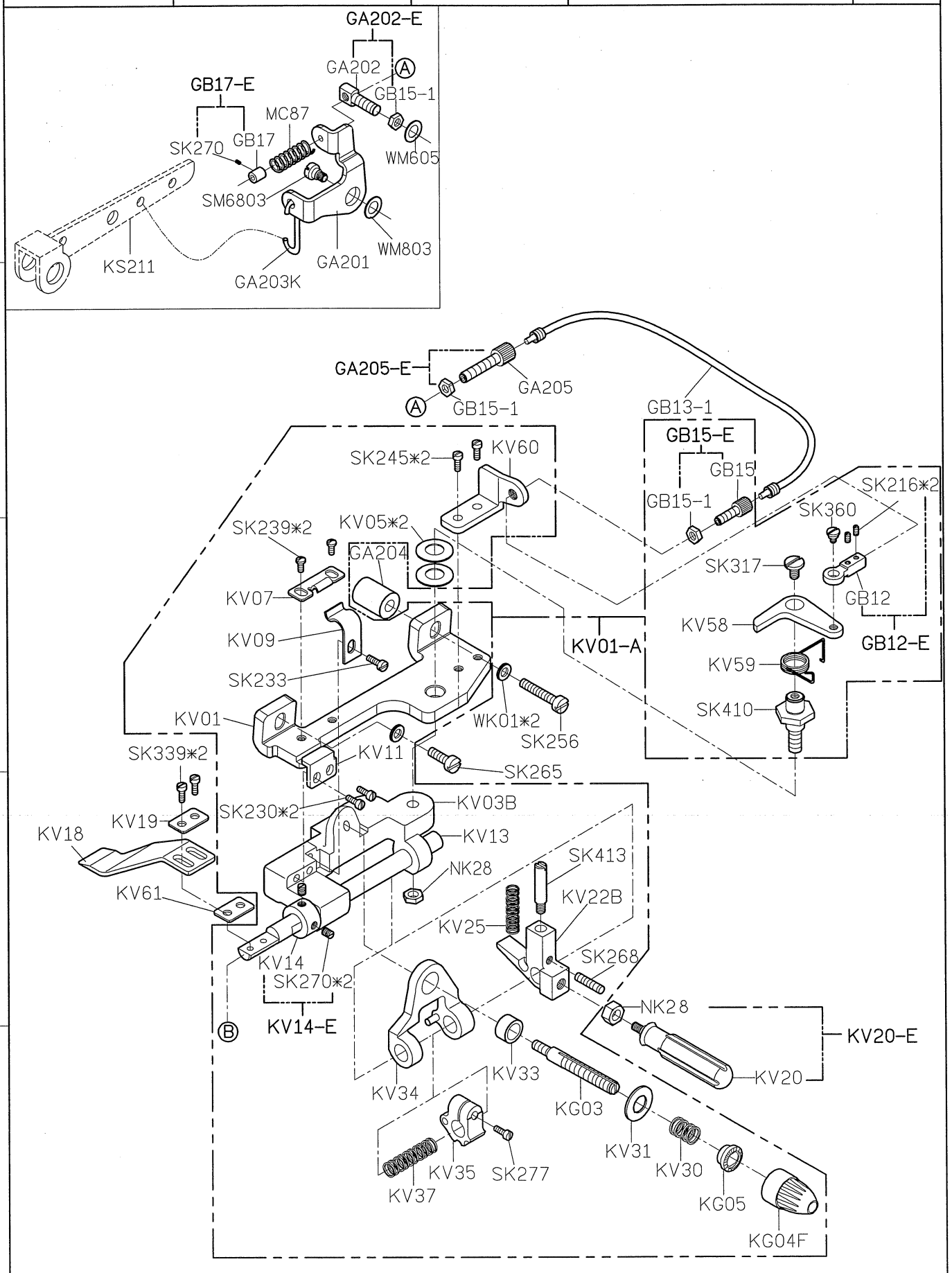

SIRUBA PARTS LIST	Series	Parts Group	Subclass / Remark	Page
	700L	LFA		1/3
				Date
				2022/12/01

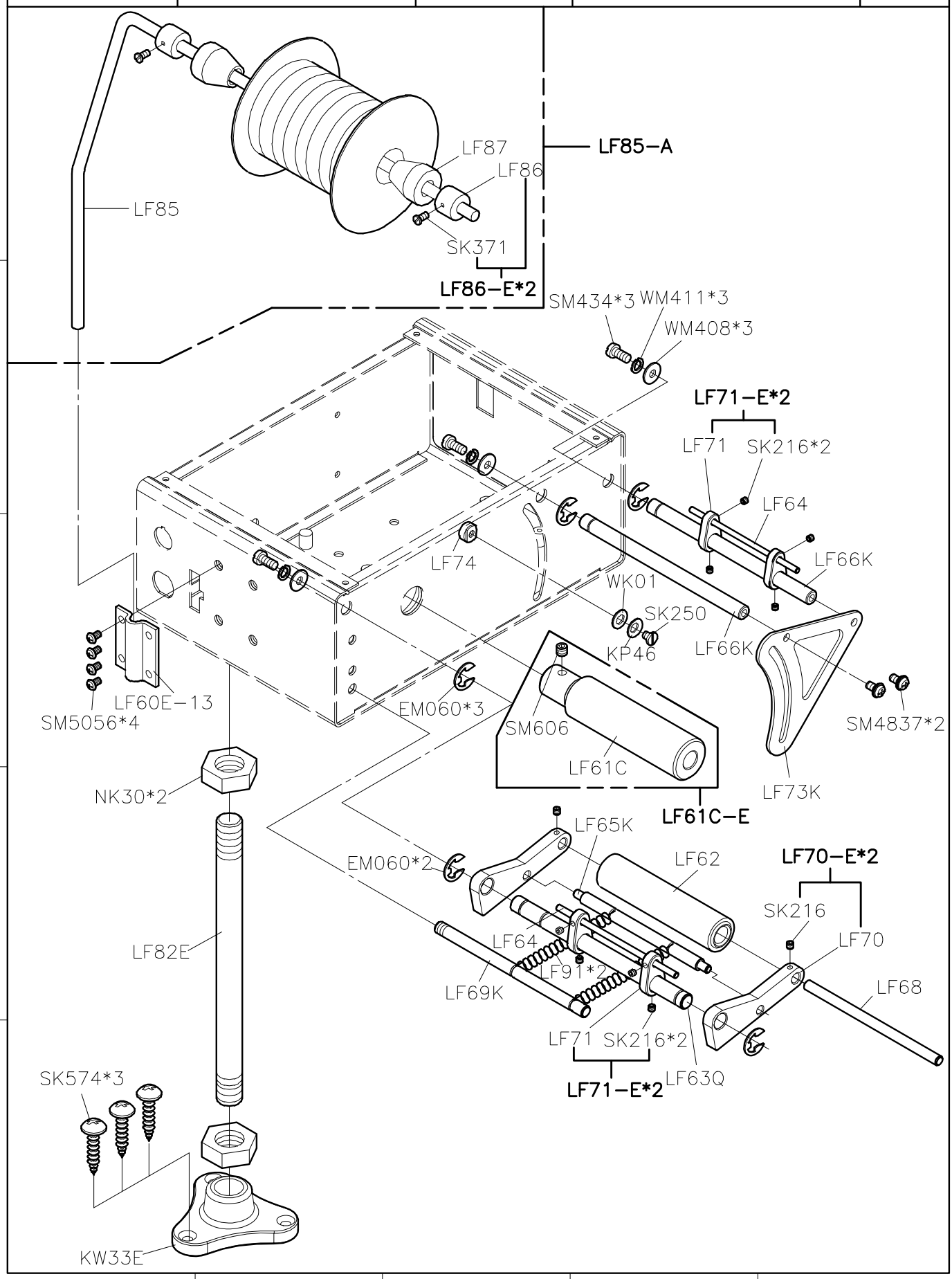

SIRUBA PARTS LIST	Series	Parts Group	Subclass / Remark	Page
	700L	LFA	#: Use for 110V	2/3
				Date
				2022/12/01

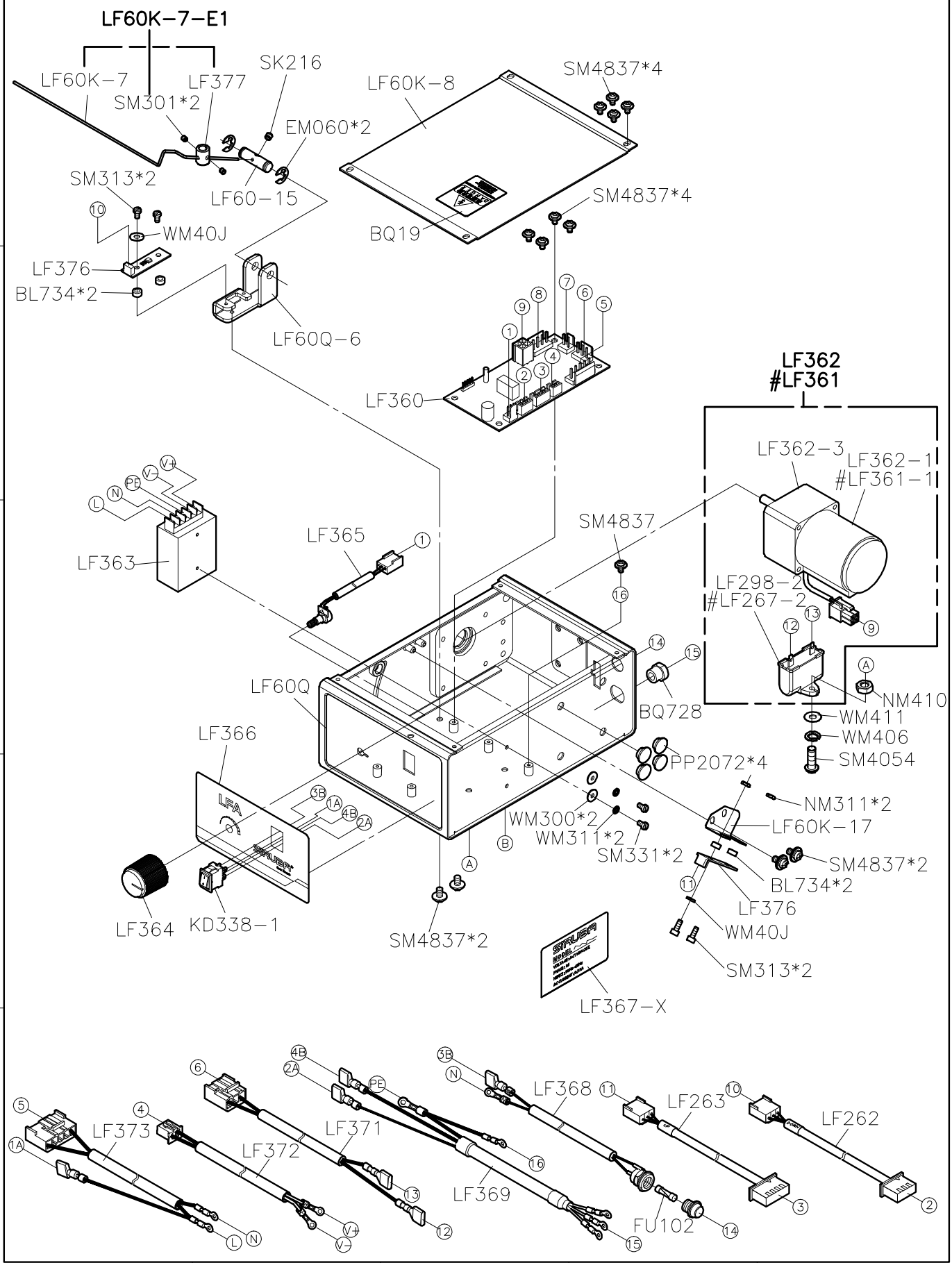

SIRUBA PARTS LIST	Series	Parts Group	Subclass / Remark	Page
	700L	LFA	#: Use for 110V	3/3
				Date
				2026/03/06

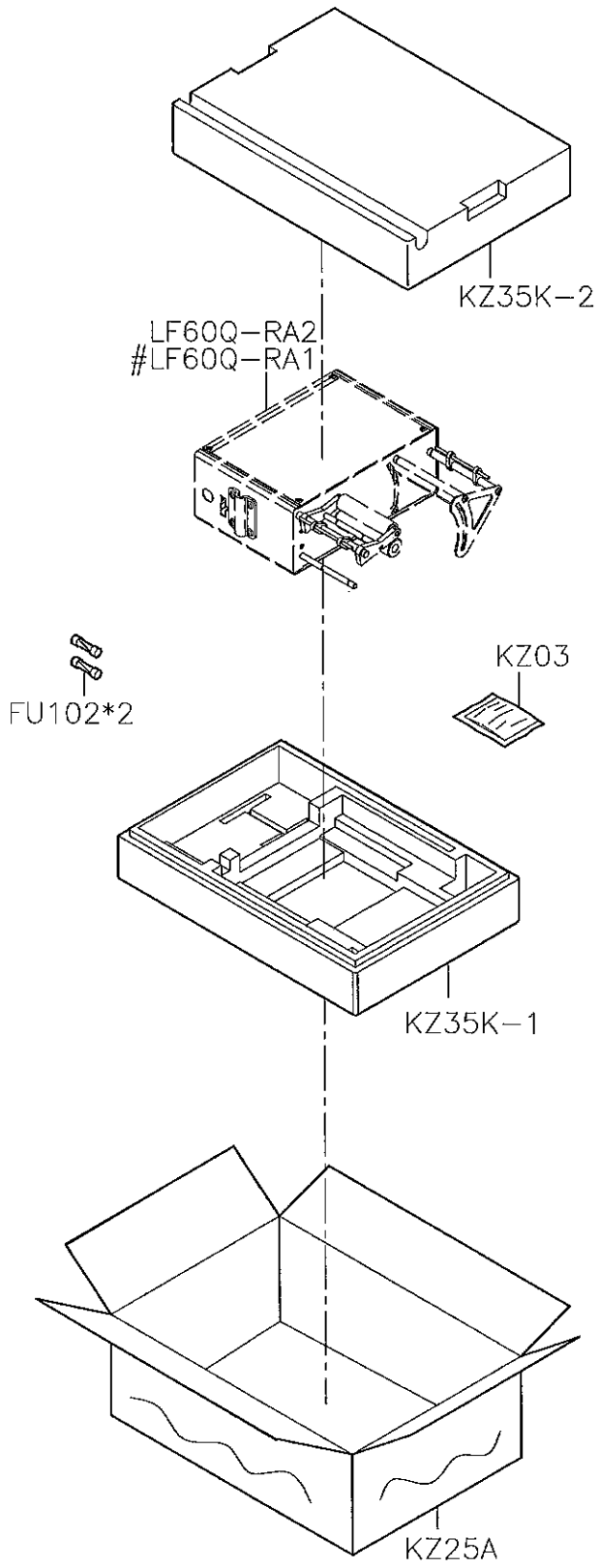

SIRUBA PARTS LIST	Series	Parts Group	Subclass / Remark	Page
	700L	LFC3-K1	▲ 橡膠輪適用薄鬆緊帶 Rubber puller for thin elastic tape	1/4
				Date
				2023/09/18

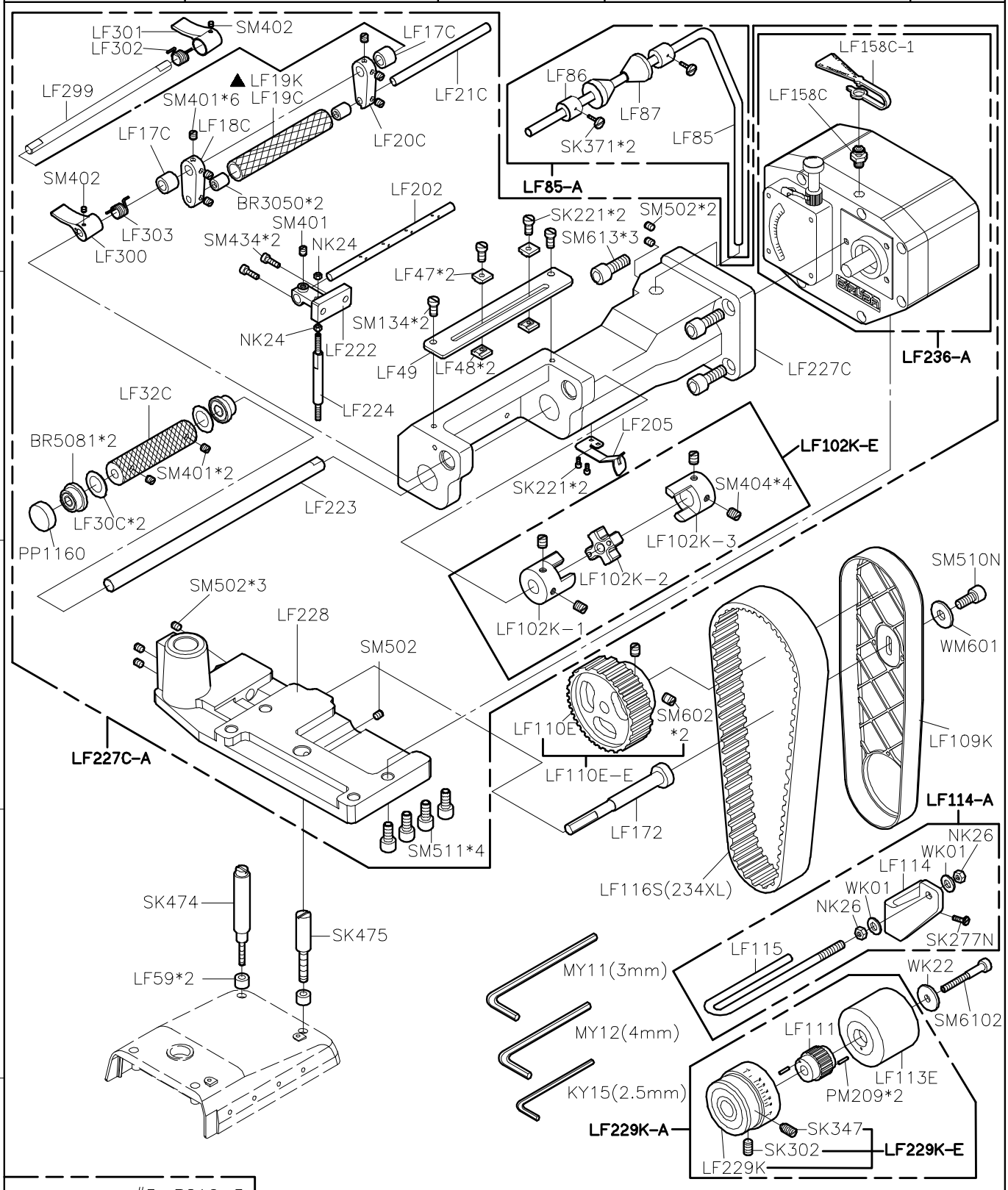

SiRUBA PARTS LIST	Series	Parts Group	Subclass / Remark	Page
	700L	LFC3-K1	For 速普簡易直驅	2/4
				Date
				2023/09/18

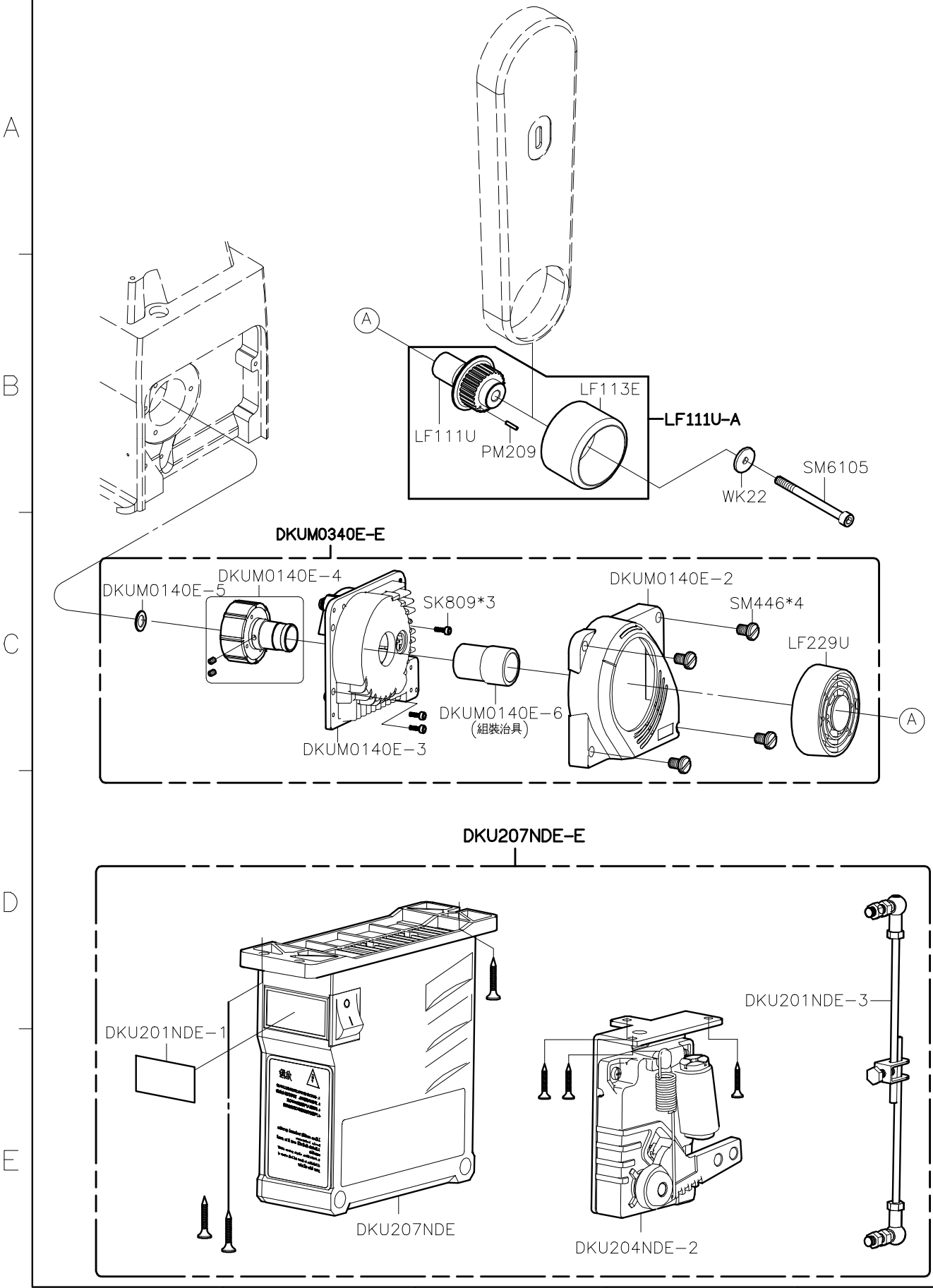

SIRUBA PARTS LIST	Series	Parts Group	Subclass / Remark	Page
	700L	LFC3-K1		3/4
				Date
				2023/09/18

LF236-A

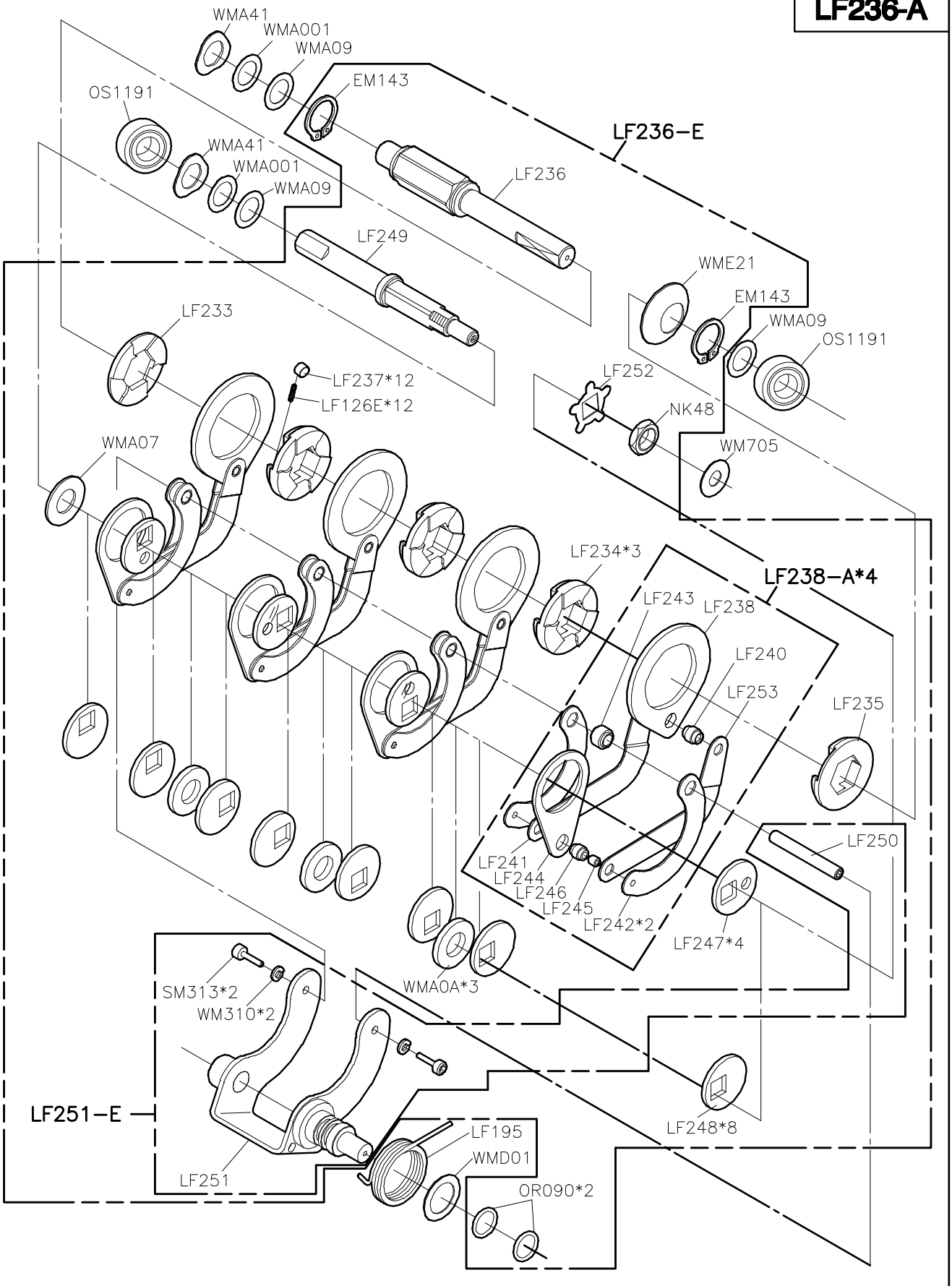

SIRUBA PARTS LIST	Series	Parts Group	Subclass / Remark	Page
	700L	LFC3-K1		4/4
				Date
				2023/09/18

LF236-A

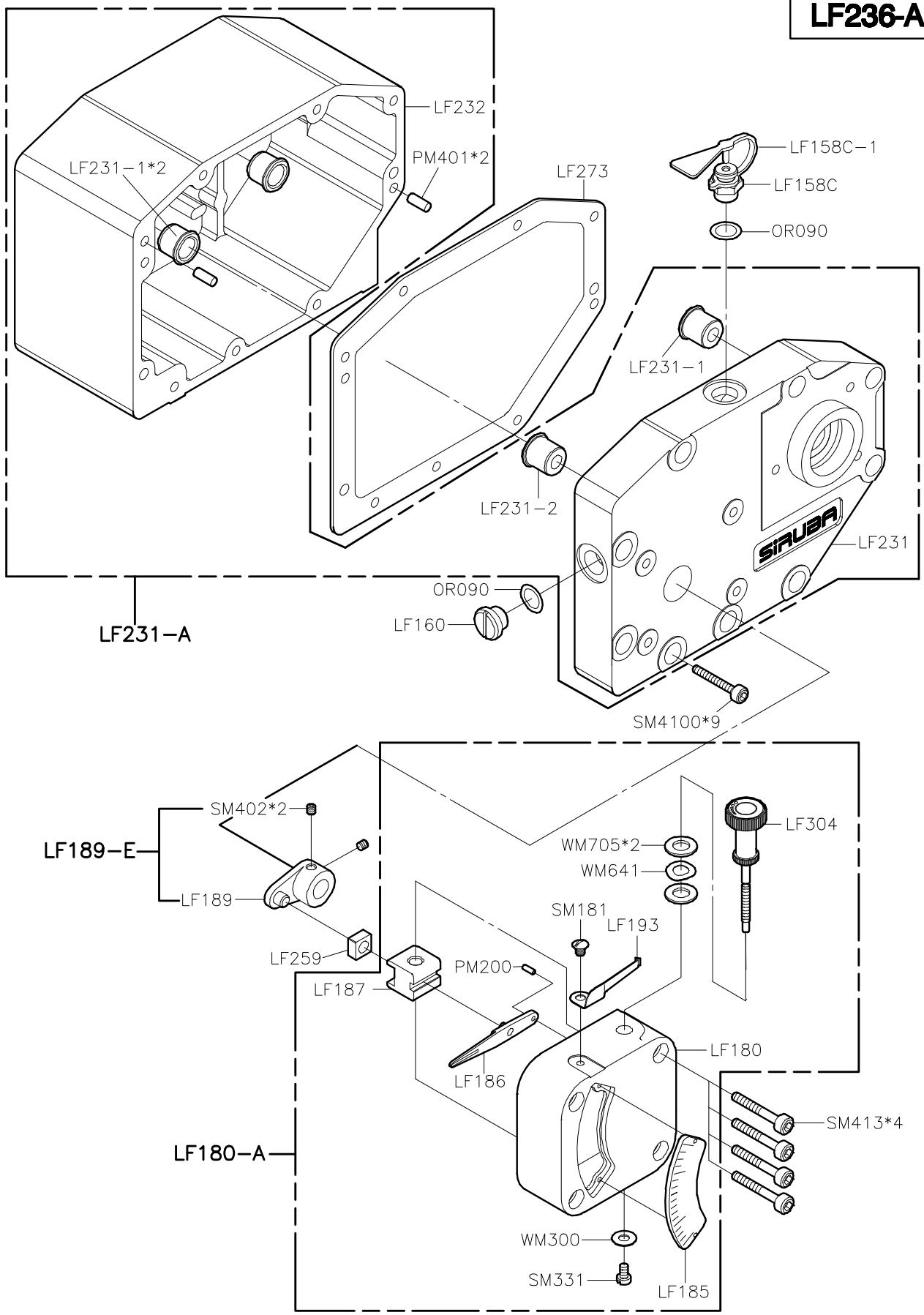

SIRUBA PARTS LIST	Series	Parts Group	Subclass / Remark	Page
	700L	LFR	LFRK-R1 Use for Single Phase AC 110V LFRK-R2 Use for Single Phase AC 220V	1/4
				Date
				2022/12/01

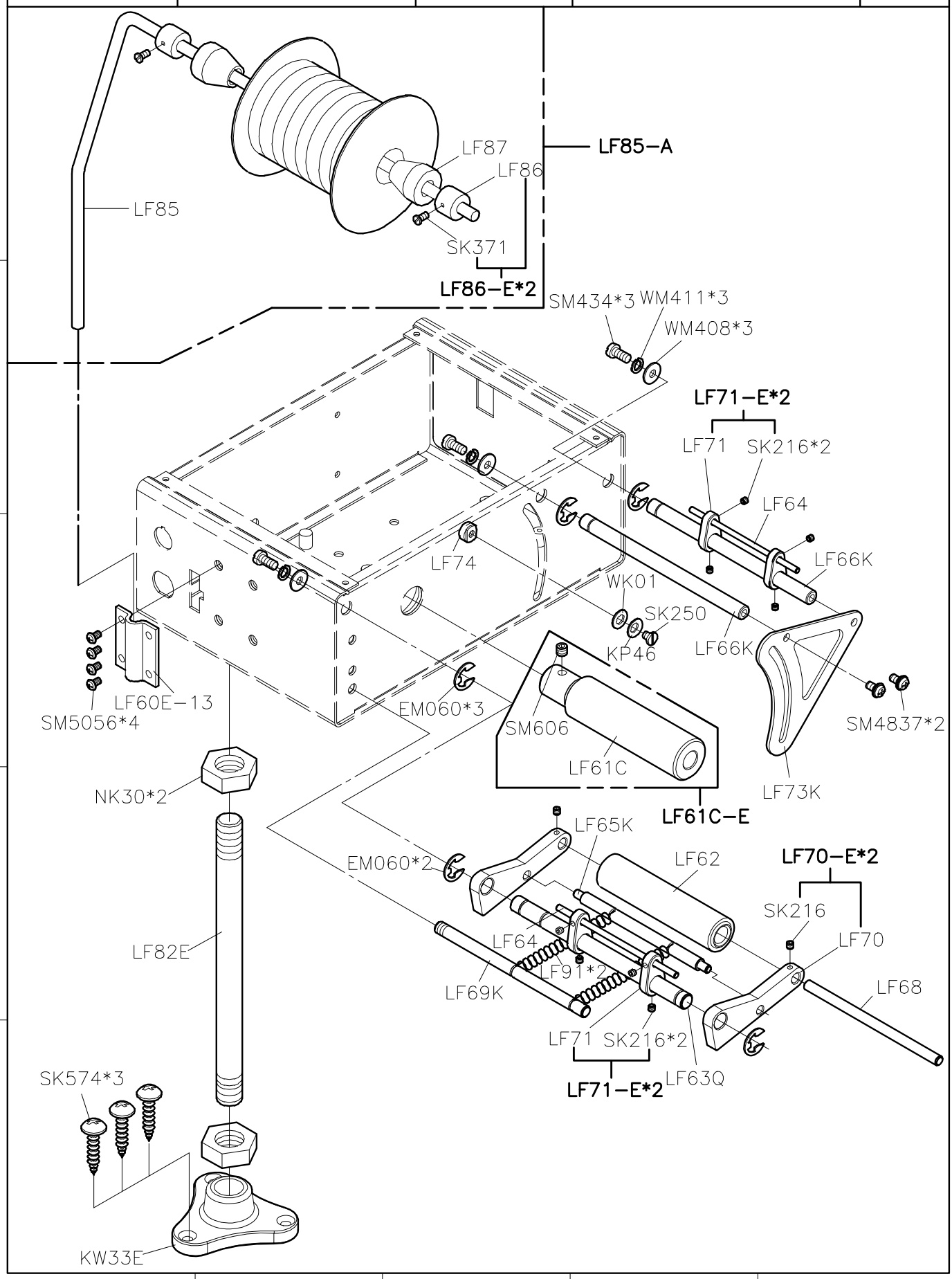

SIRUBA PARTS LIST	Series	Parts Group	Subclass / Remark	Page
	700L	LFR	#: Use for 110V	2/4
				Date
				2022/12/01

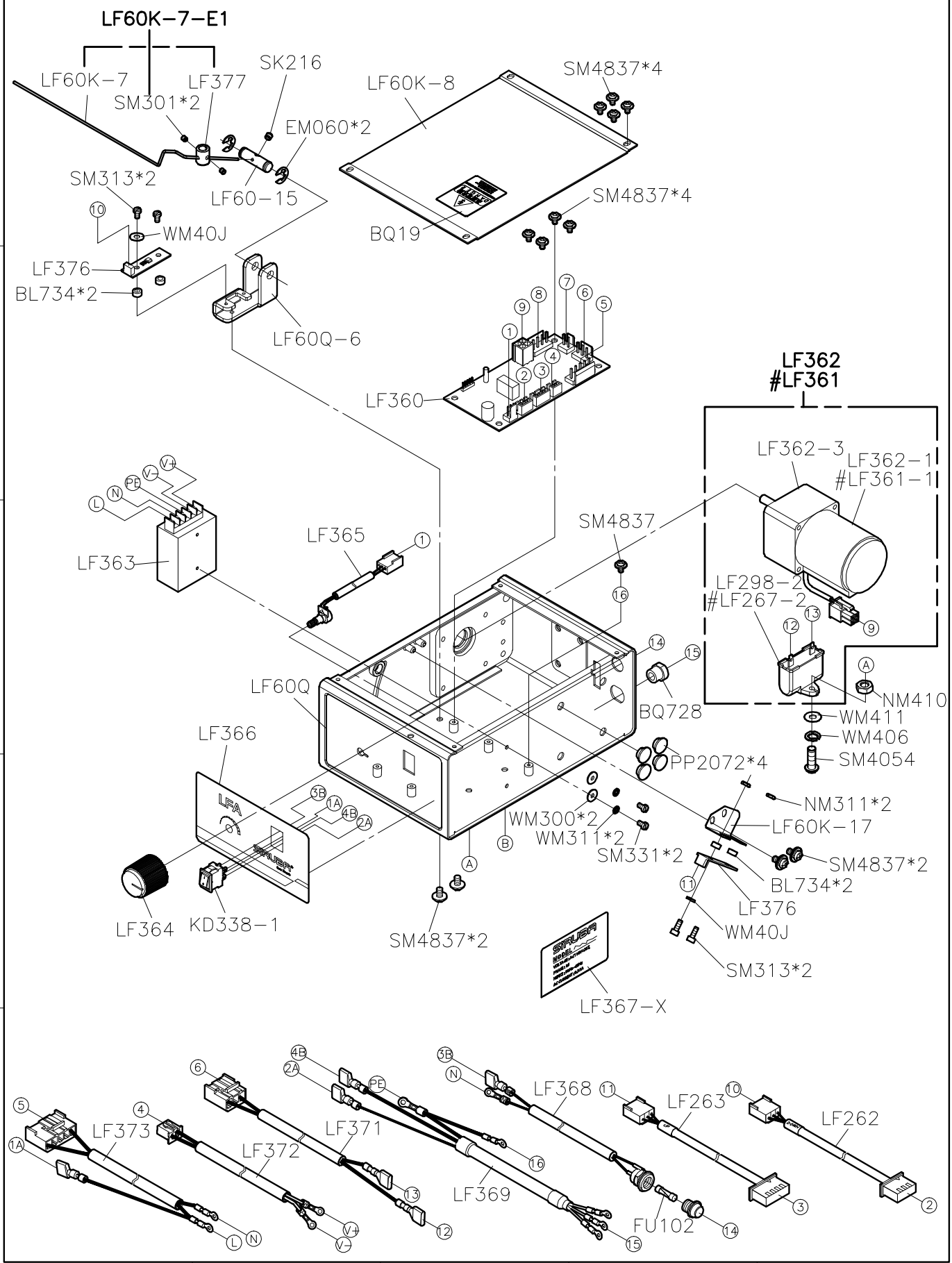

SIRUBA PARTS LIST	Series	Parts Group	Subclass / Remark	Page
	700L	LFR	#:Use for 110V	3/4
				Date
				2022/12/01

LF290A-A2(220V)
#LF290A-A1(110V)

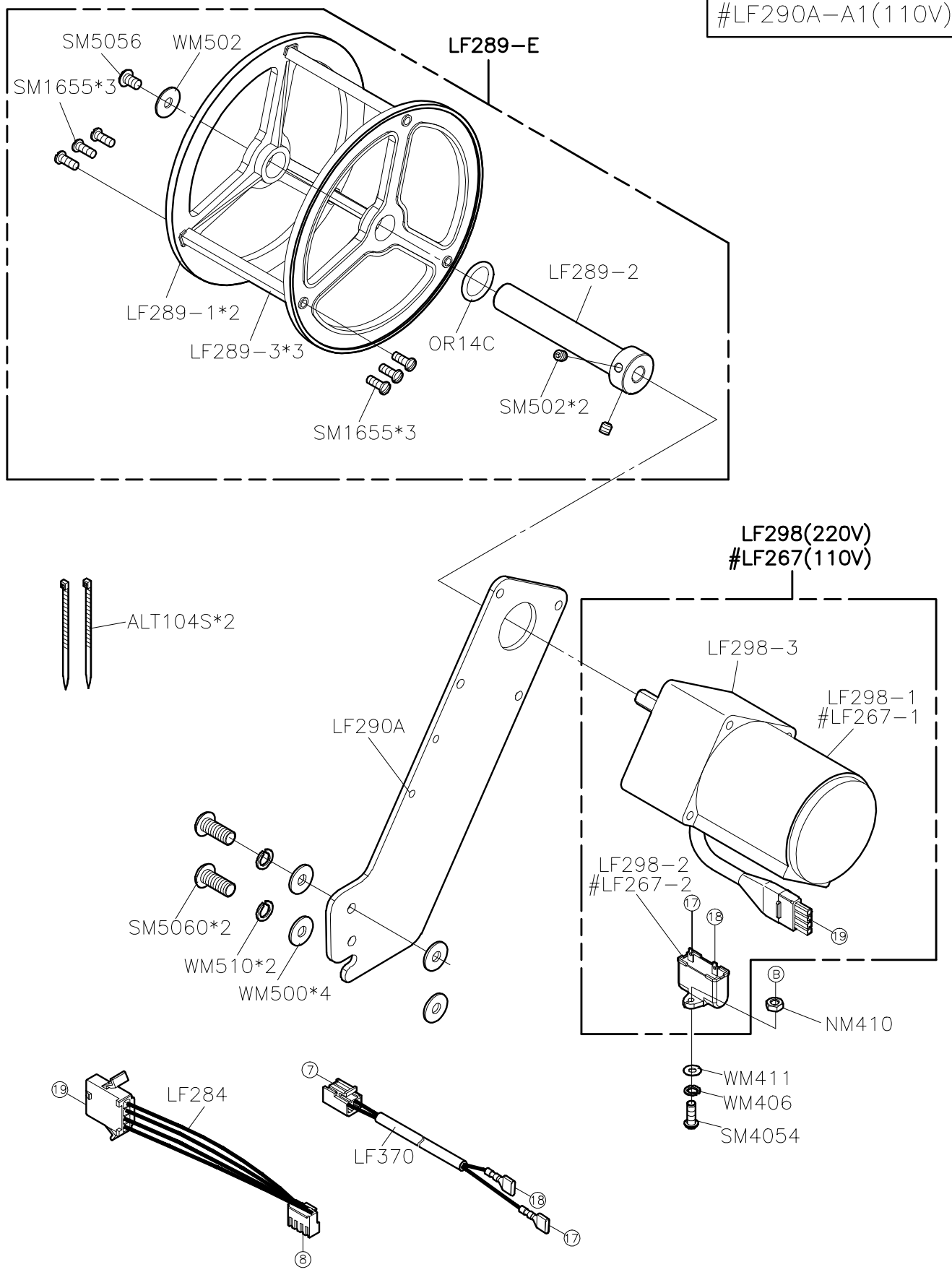

SIRUBA PARTS LIST	Series	Parts Group	Subclass / Remark	Page
	700L	LFR	#:Use for 110V	4/4
				Date
				2026/03/06

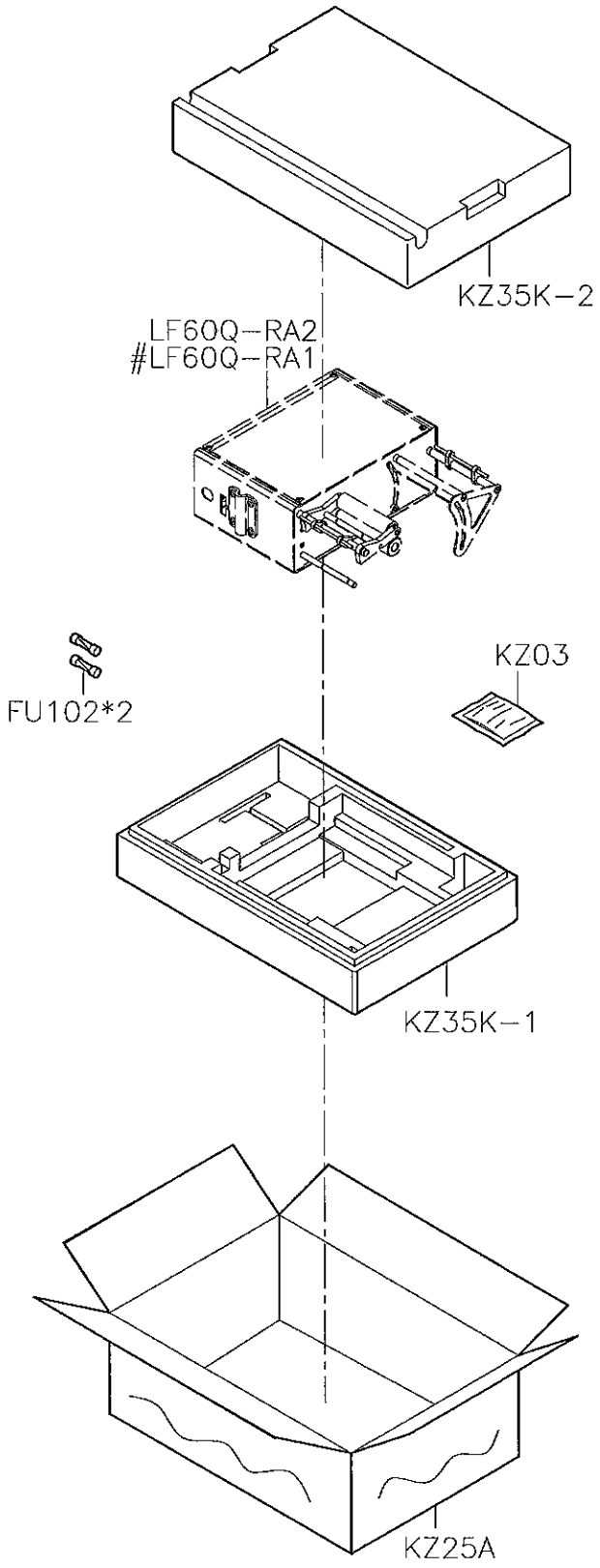

SIRUBA PARTS LIST	Series	Parts Group	Subclass / Remark	Page
	700L	PS-L		1/1
				Date
				2016/06/25

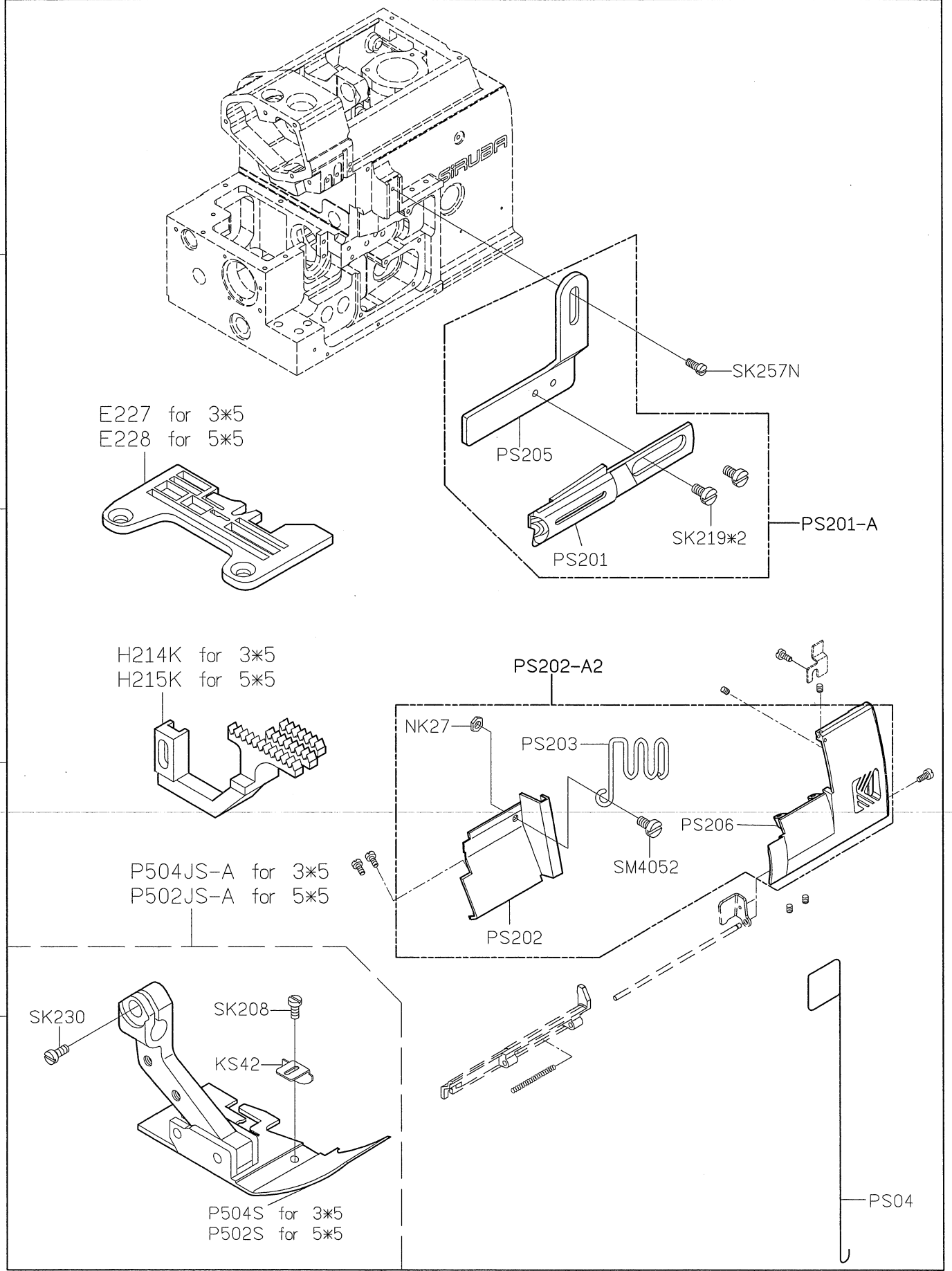

SIRUBA PARTS LIST	Series	Parts Group	Subclass / Remark	Page
	700L	SD-L		1/5
				Date
				2021/11/26

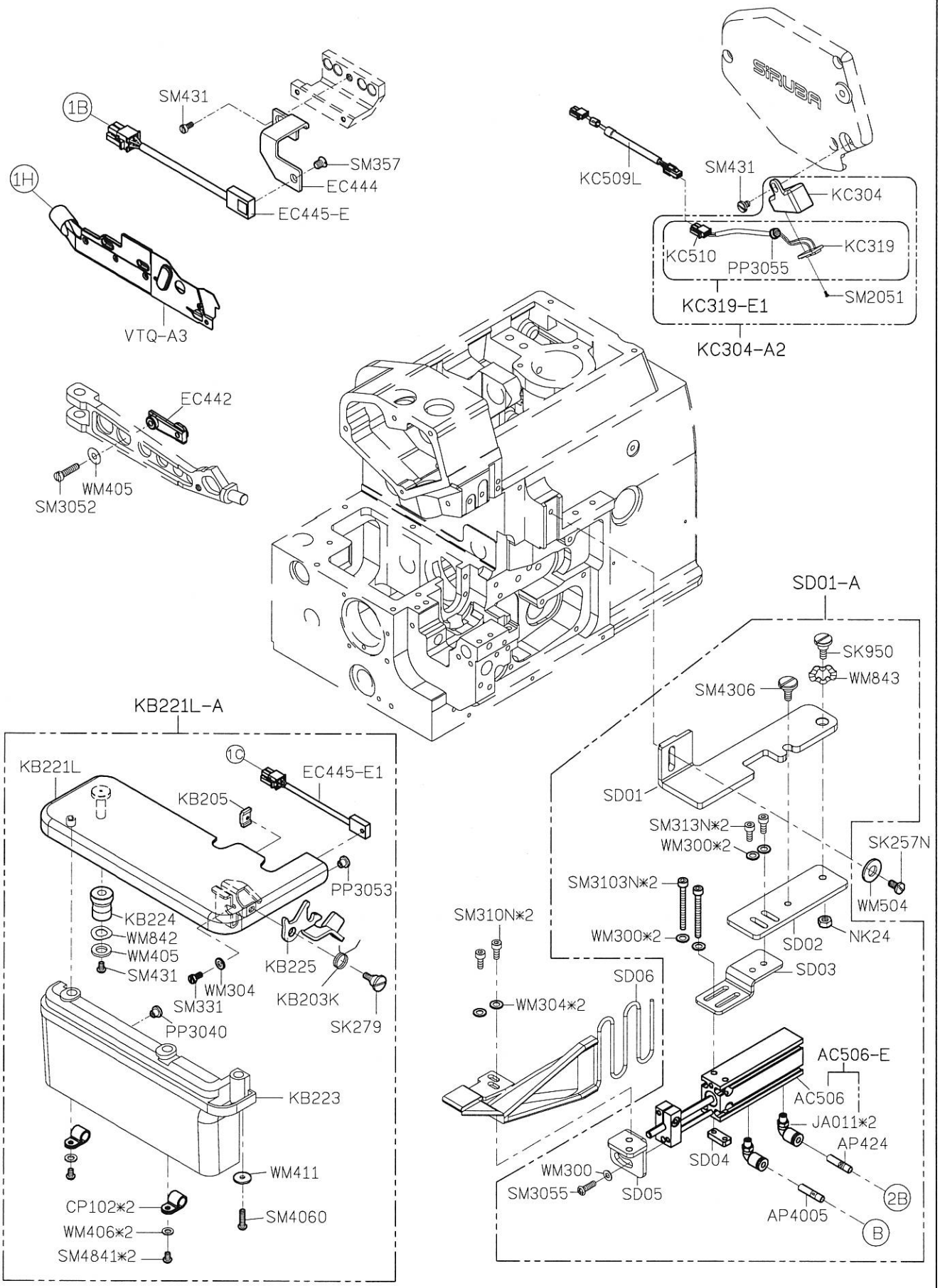

SIRUBA PARTS LIST	Series	Parts Group	Subclass / Remark	Page
	700L	SD-L		2/5
				Date
				2021/11/26

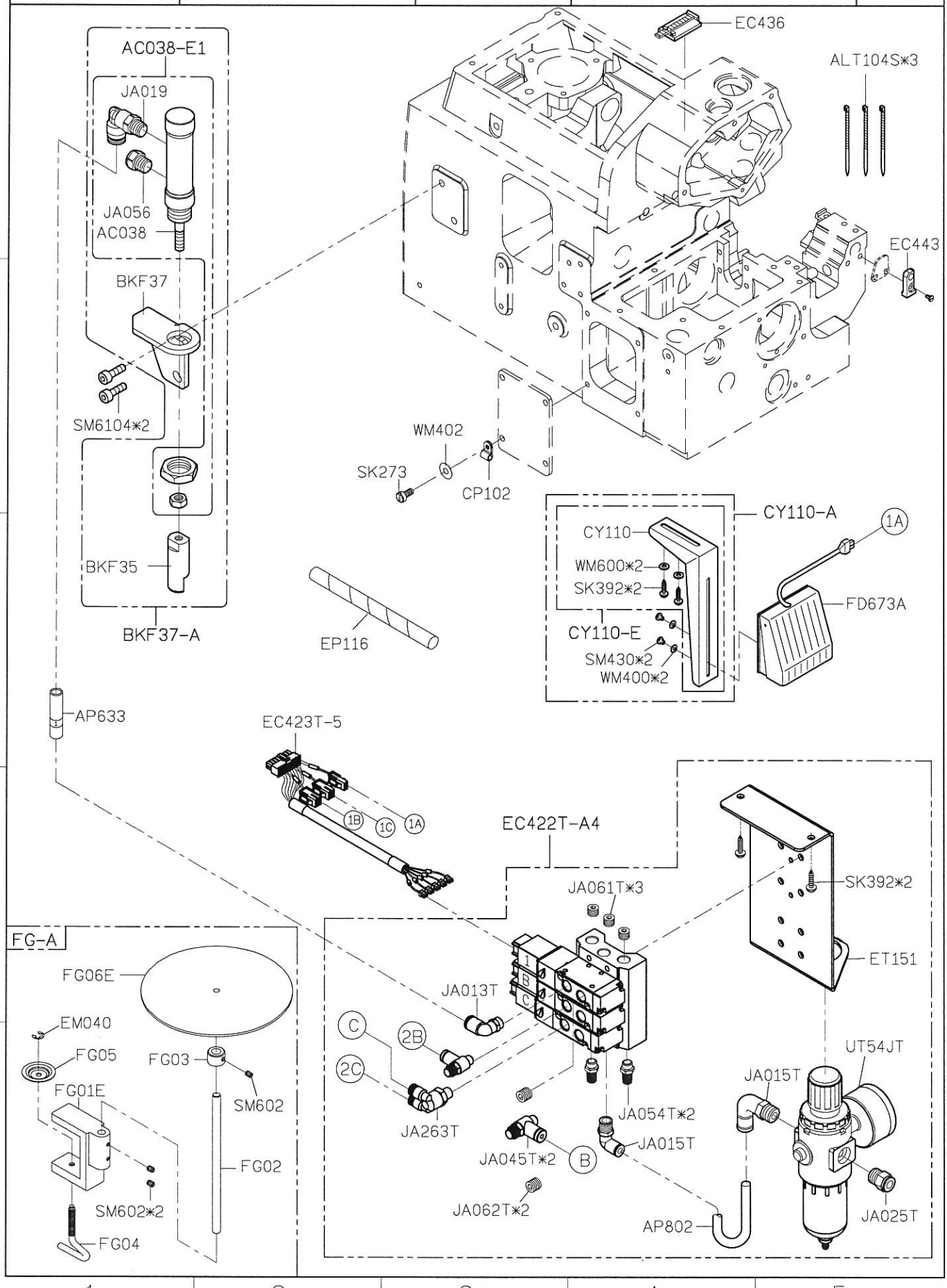

SIRUBA PARTS LIST	Series	Parts Group	Subclass / Remark	Page
	700L	SD-L		3/5
				Date
				2021/11/26

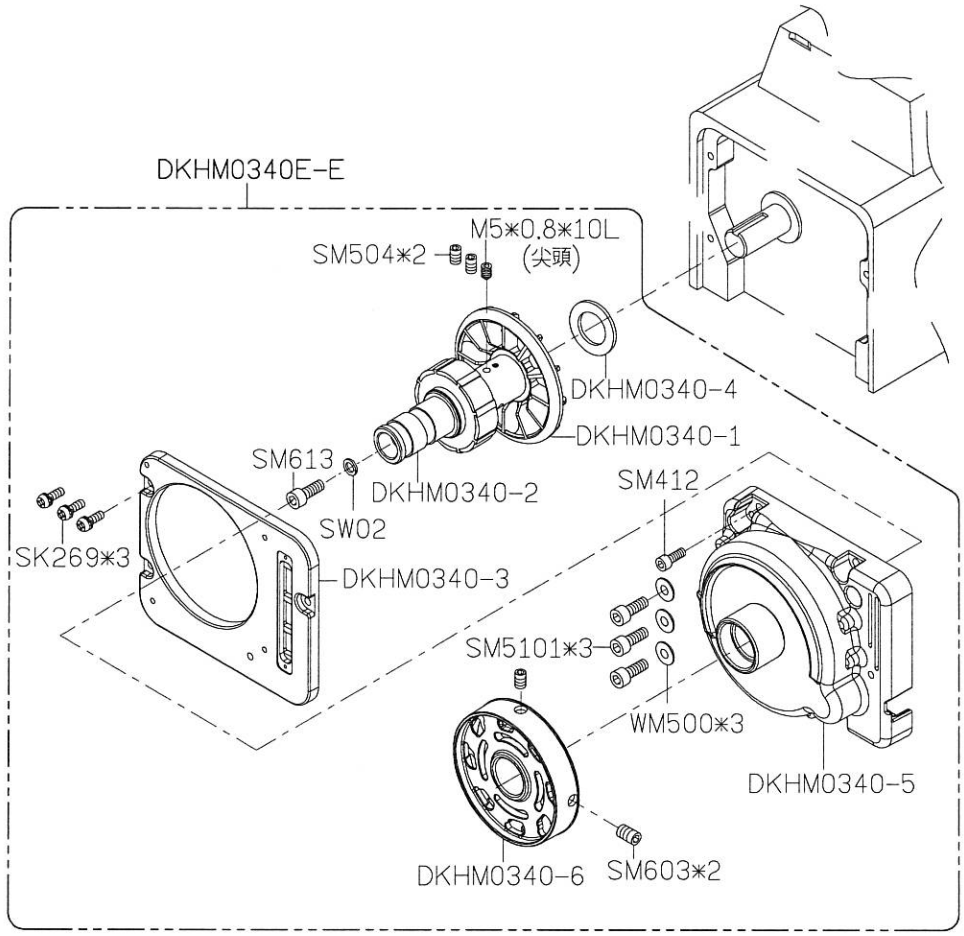

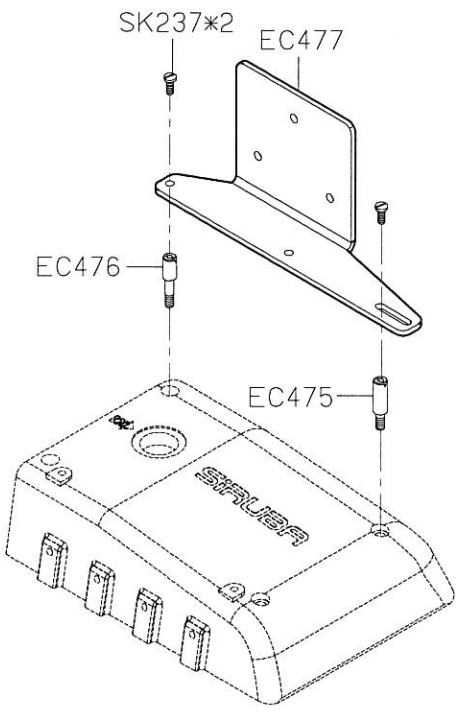

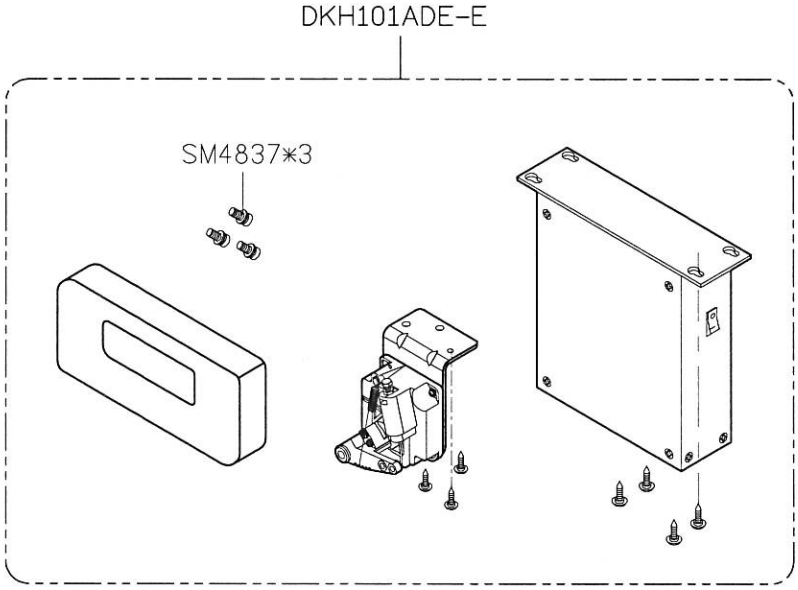

SIRUBA PARTS LIST	Series	Parts Group	Subclass / Remark	Page
	700L	SD-L	Note 註記: 1) ★ Before installation, please check one side is Air IN, another side is Air OUT.	4/5
				Date
				2021/11/26

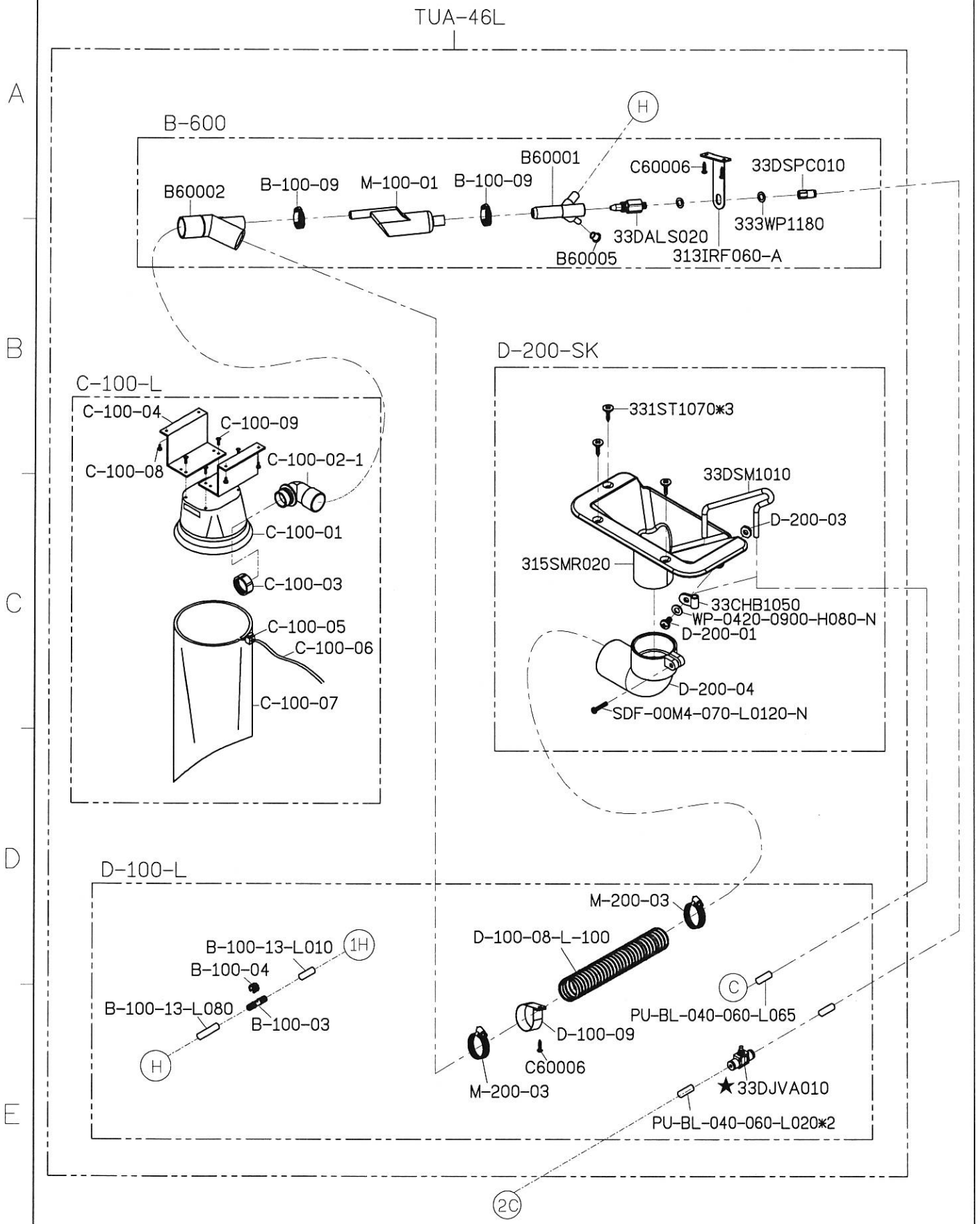

SiRUBA PARTS LIST	Series	Parts Group	Subclass / Remark	Page
	700L	SD-L		5/5
				Date
				2021/11/26

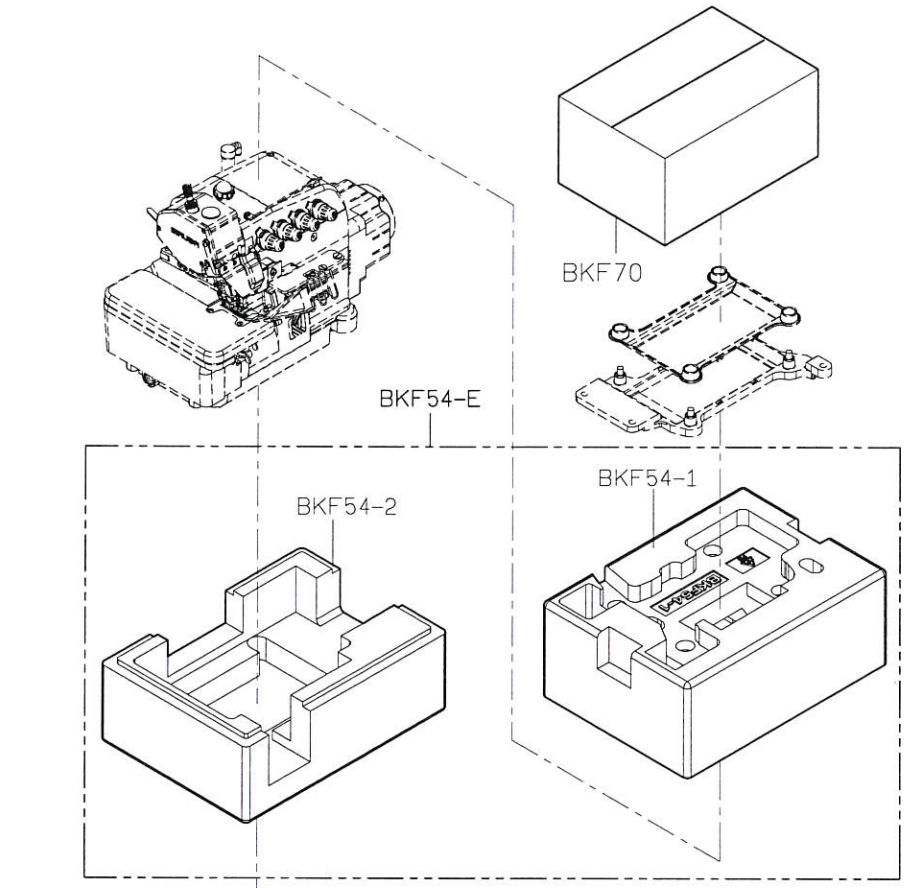

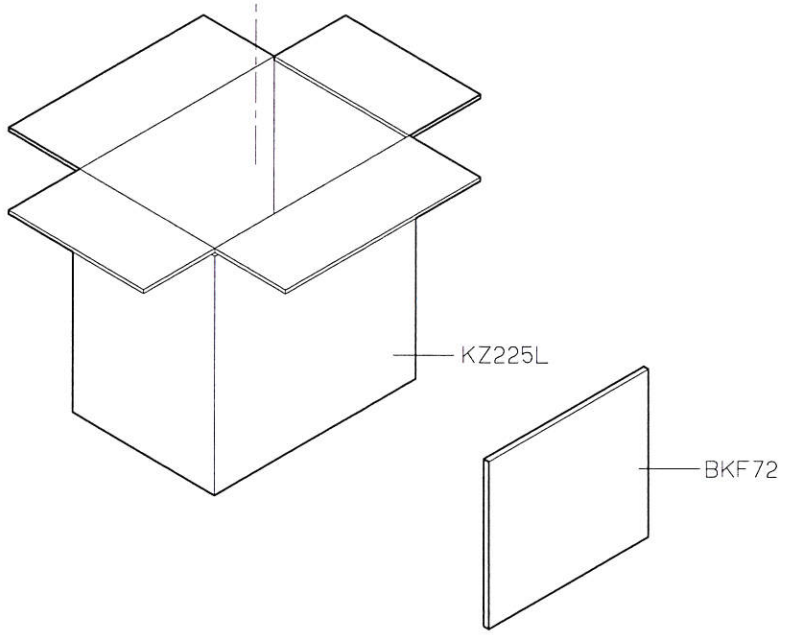

SIRUBA

PARTS LIST

Series	Parts Group	Subclass / Remark	Page
700L	TA-L		1/1
			Date
			2016/06/25

30TA	50TA
E235	E238
P224-A	P223-A
KG266	KG256K

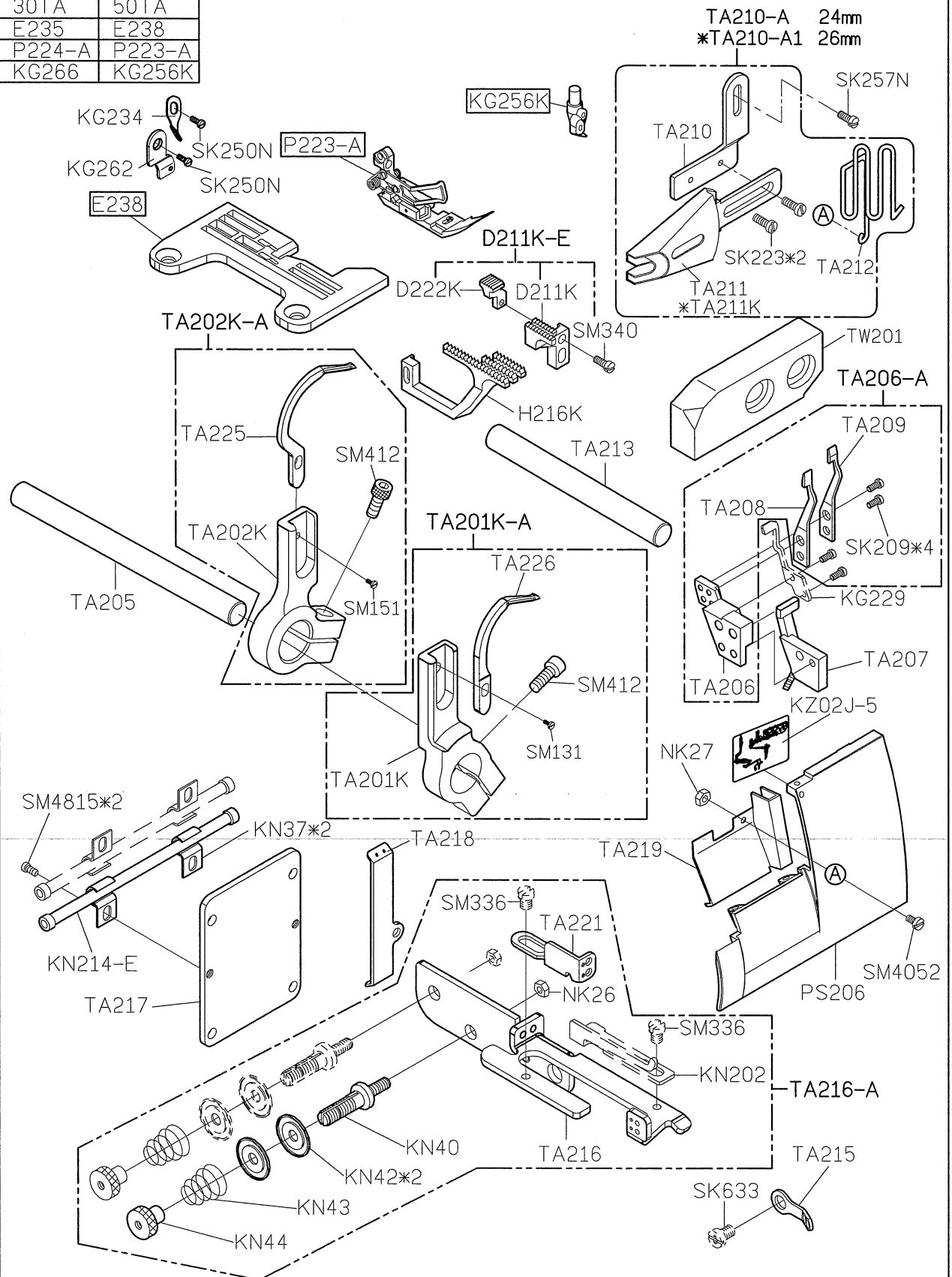

SiRUBA PARTS LIST	Series	Parts Group	Subclass / Remark	Page
	700K/700KD/700L 988/988D	TBK	TBK-1 for 700K/988/700L TBKD-1 for 700KD/988D	1/1 Date 2018/08/28

MODEL	TBK-1(700K/988/700L用)	TBKD-1(700KD/988D用)
TBK	TB201	TB201D
TABLE	700K-T2	700KD-T2

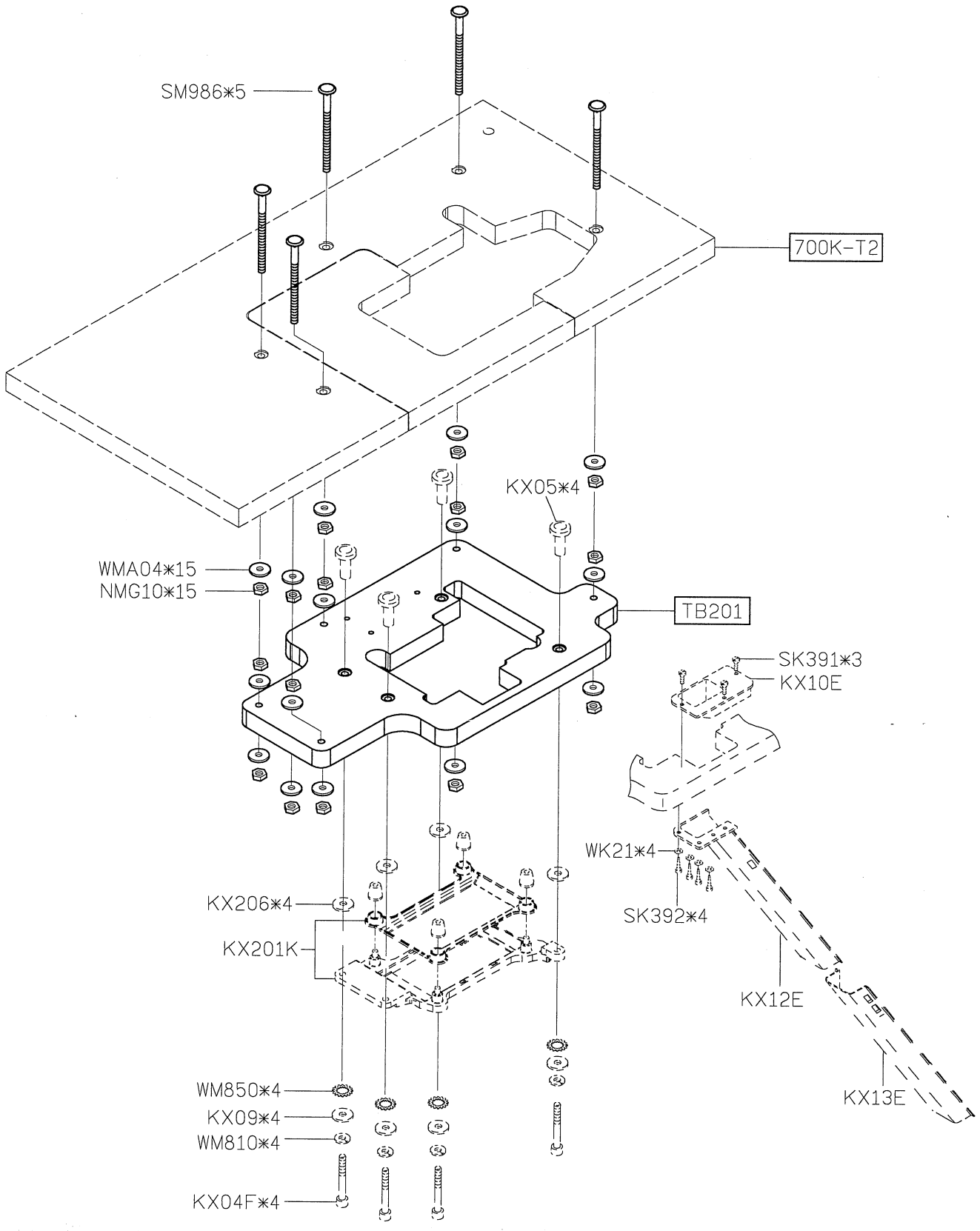

SiRUBA PARTS LIST	Series	Parts Group	Subclass / Remark	Page
	700L 700LQ	TG-L		1/1
				Date
				2023/07/19

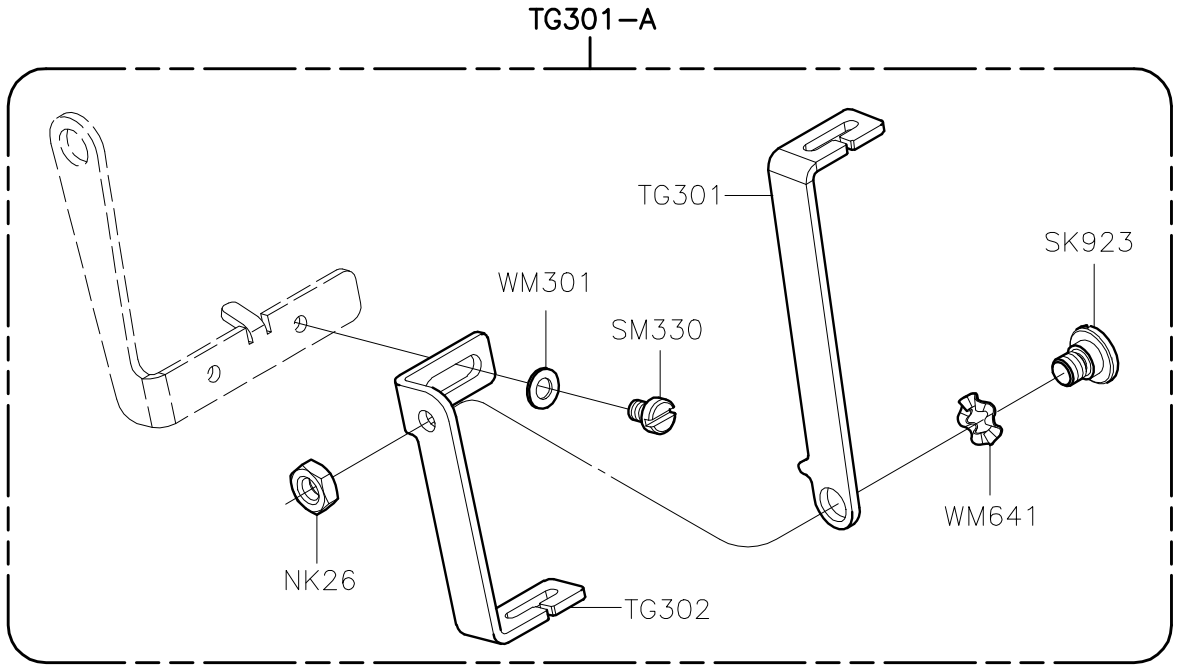

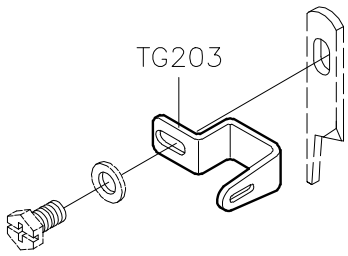

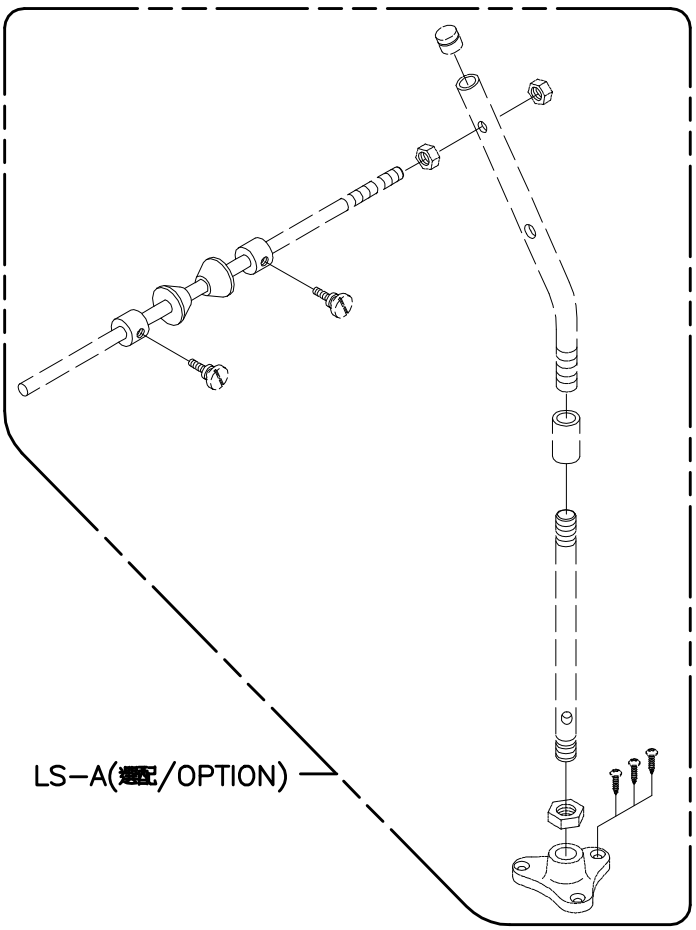

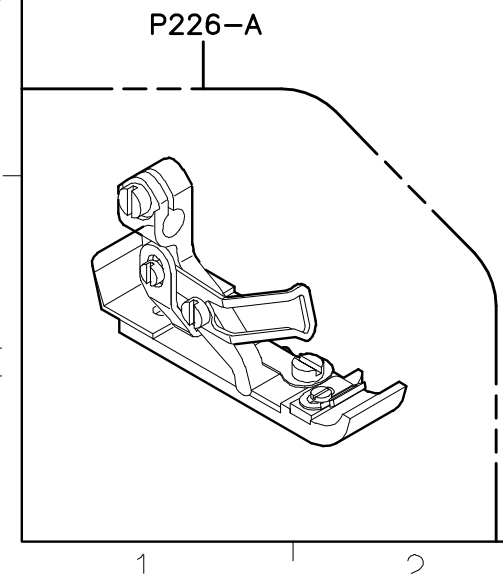

SIRUBA PARTS LIST	Series	Parts Group	Subclass / Remark	Page
	700L	TR-KJ		1/1
				Date
				2016/06/25

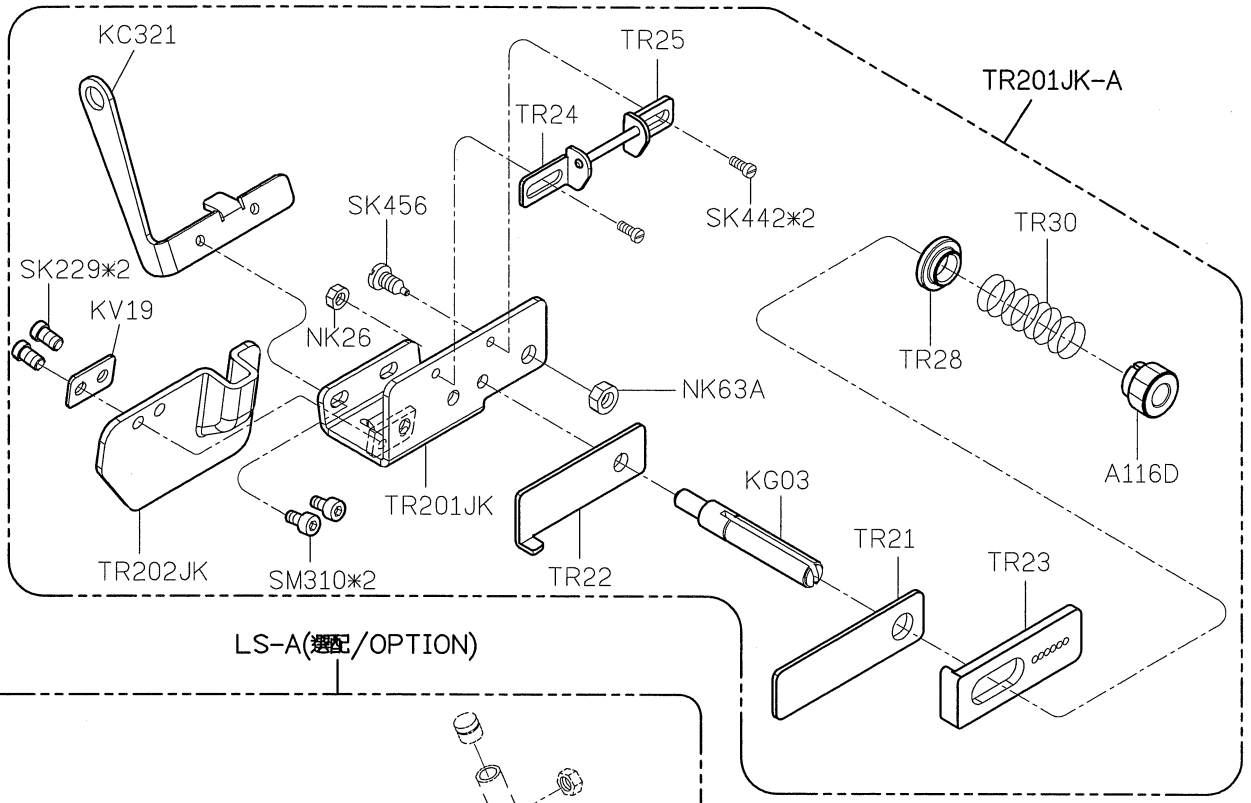

LS-A(選配/OPTION)

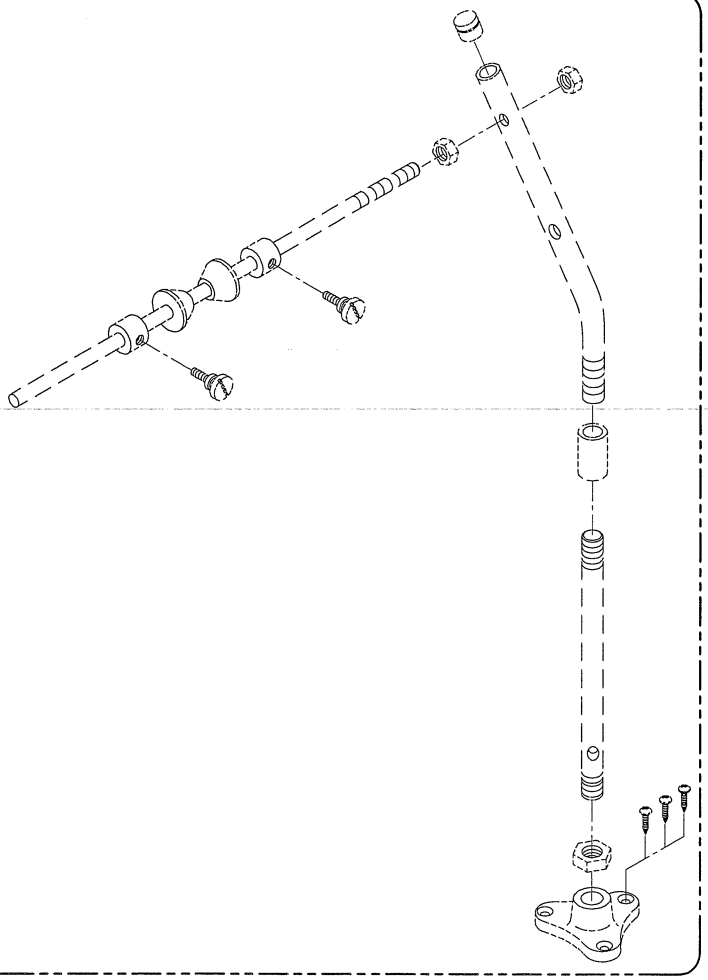

選配/OPTION

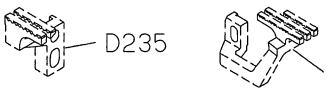

FOR PLASTIC OR NON-WOVEN FABRIC
FOR 塑膠布或不織布用

P216-3

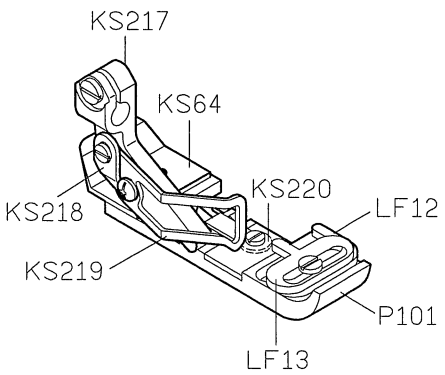

SiRUBA PARTS LIST	Series	Parts Group	Subclass / Remark	Page
	700L 600KP	TUC	FOR DKLU1-5用	1/3
				Date
				2026/07/02

TUC－05

TUC033－A

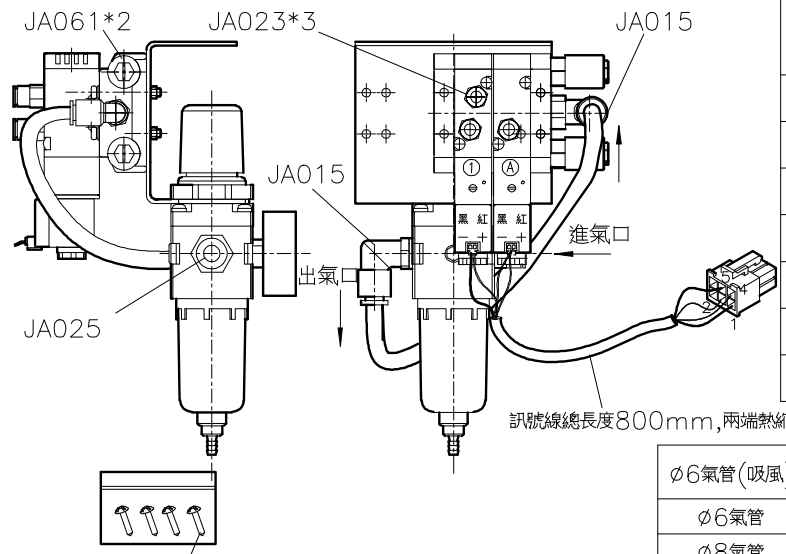

Housing:H6657R1－06(白)
PIN:6657TP

腳 序	顏 色	備 註	位 置
1	白	24V(壓腳)	1
2	紅	24V(吸風)	A
3	－	－	－
4	黑	壓腳	1
5	綠	吸風	A
6	－	－	－

品名	規格尺寸	數量	備注
ø6氣管(吸風)	長度150mm	1	接ø6調速閥
ø6氣管	長度610mm	3	
ø8氣管	長度400mm	1	

TZ－XF－4012

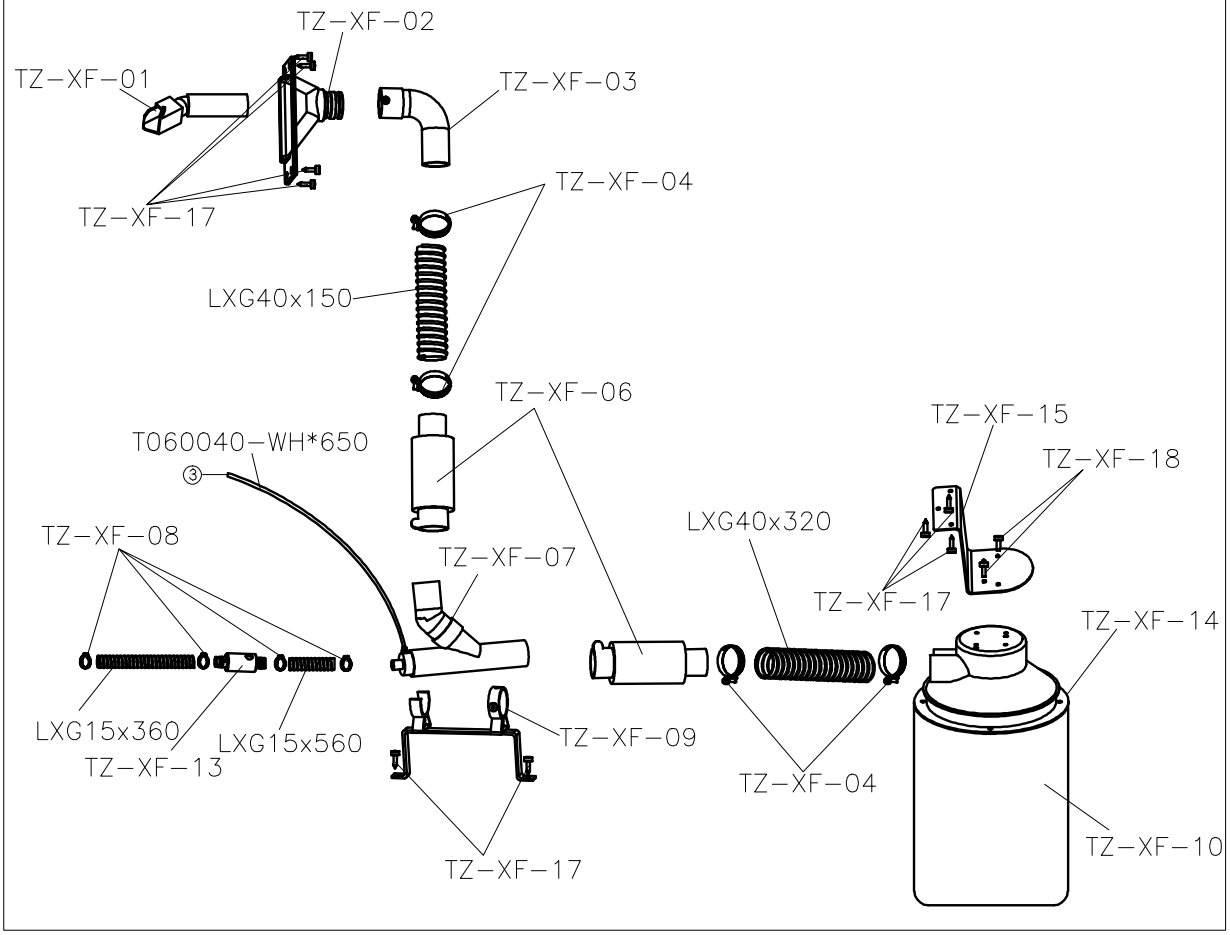

SiRUBA PARTS LIST	Series	Parts Group	Subclass / Remark	Page
	700L 600KP	TUC	FOR 調撥	2/3
				Date
				2026/07/02

TUC－05－A

TUC033－A

TUC－05

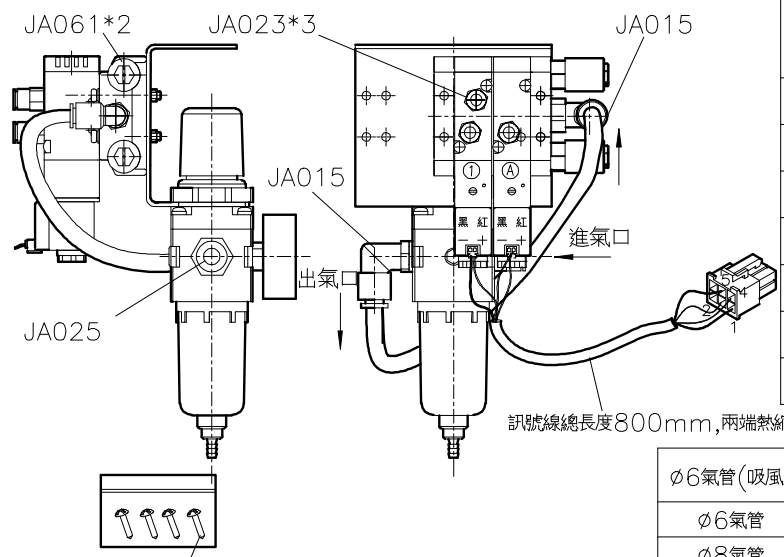

Housing:H6657R1－06(白)
PIN:6657TP

腳 序	顏 色	備 註	位 置
1	白	24V(壓腳)	1
2	紅	24V(吸風)	A
3	－	－	－
4	黑	壓腳	1
5	綠	吸風	A
6	－	－	－

品名	規格尺寸	數量	備注
ø6氣管(吸風)	長度150mm	1	接ø6調速閥
ø6氣管	長度610mm	3	
ø8氣管	長度400mm	1	

TZ－XF－4012

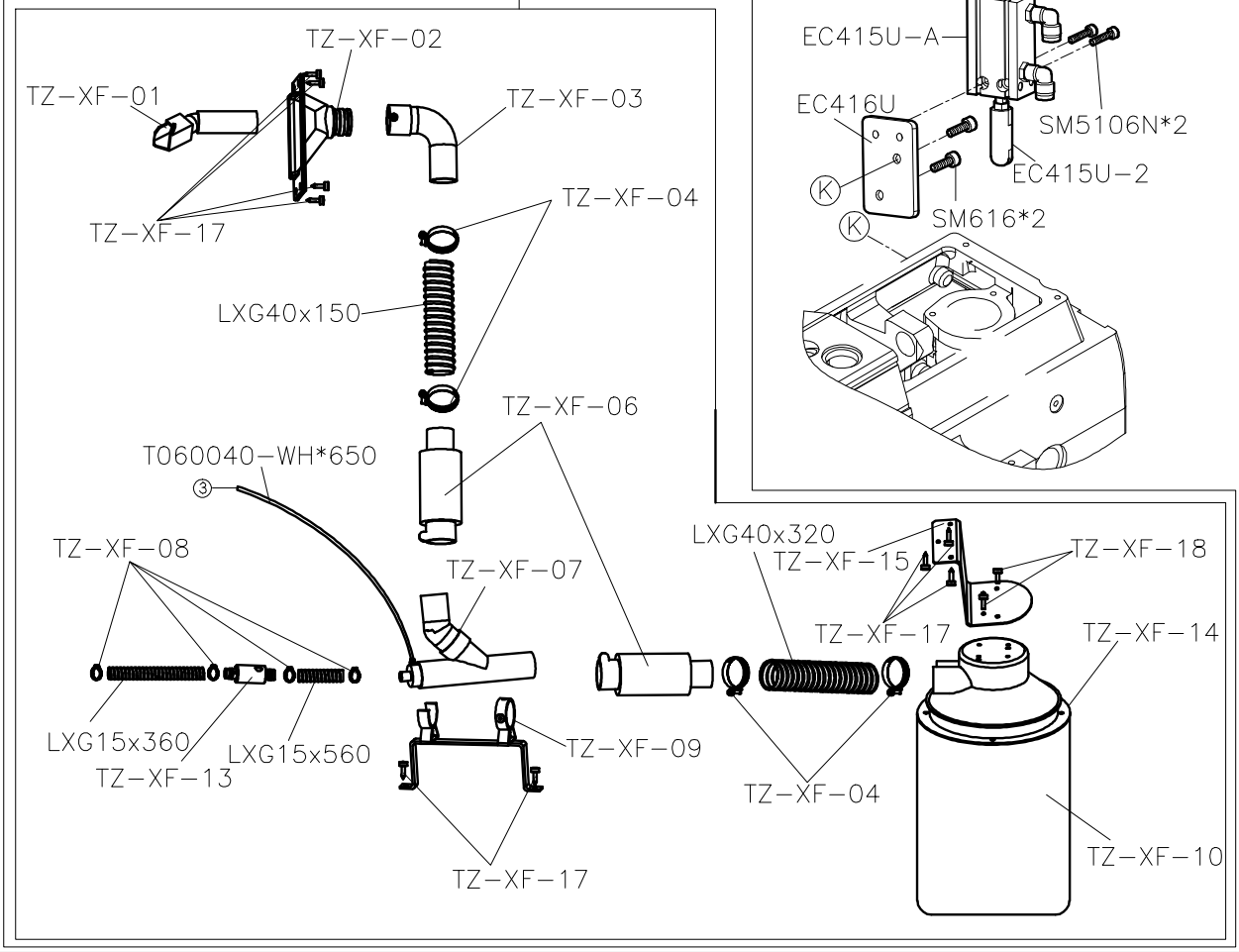

SIRUBA PARTS LIST	Series	Parts Group	Subclass / Remark	Page
	700L 600KP	TUC	FOR DKLU1-5用	3/3
				Date
				2026/07/02

TUC－09

Housing:H6657R1－06(白)
PIN:6657TP

腳 序	顏 色	備 註
1	－	－
2	紅	24V(吸風)
3	－	－
4	－	－
5	綠	吸風
6	－	－

TUC031－A1

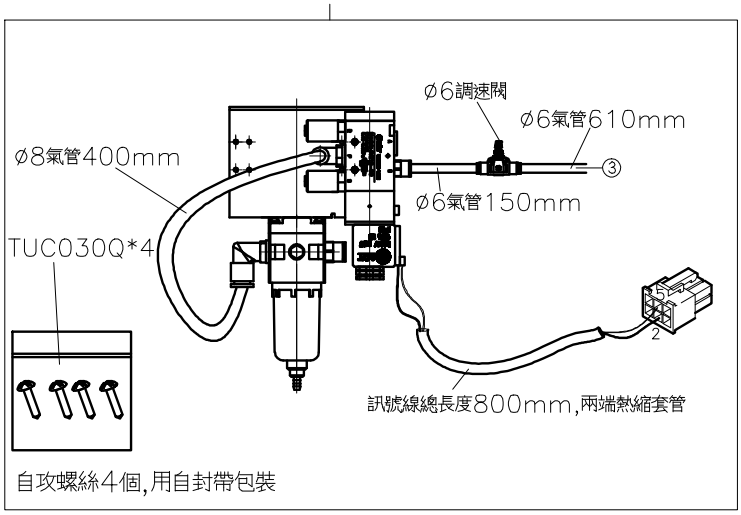

自攻螺絲4個,用自封帶包裝

TZ－XF－4012

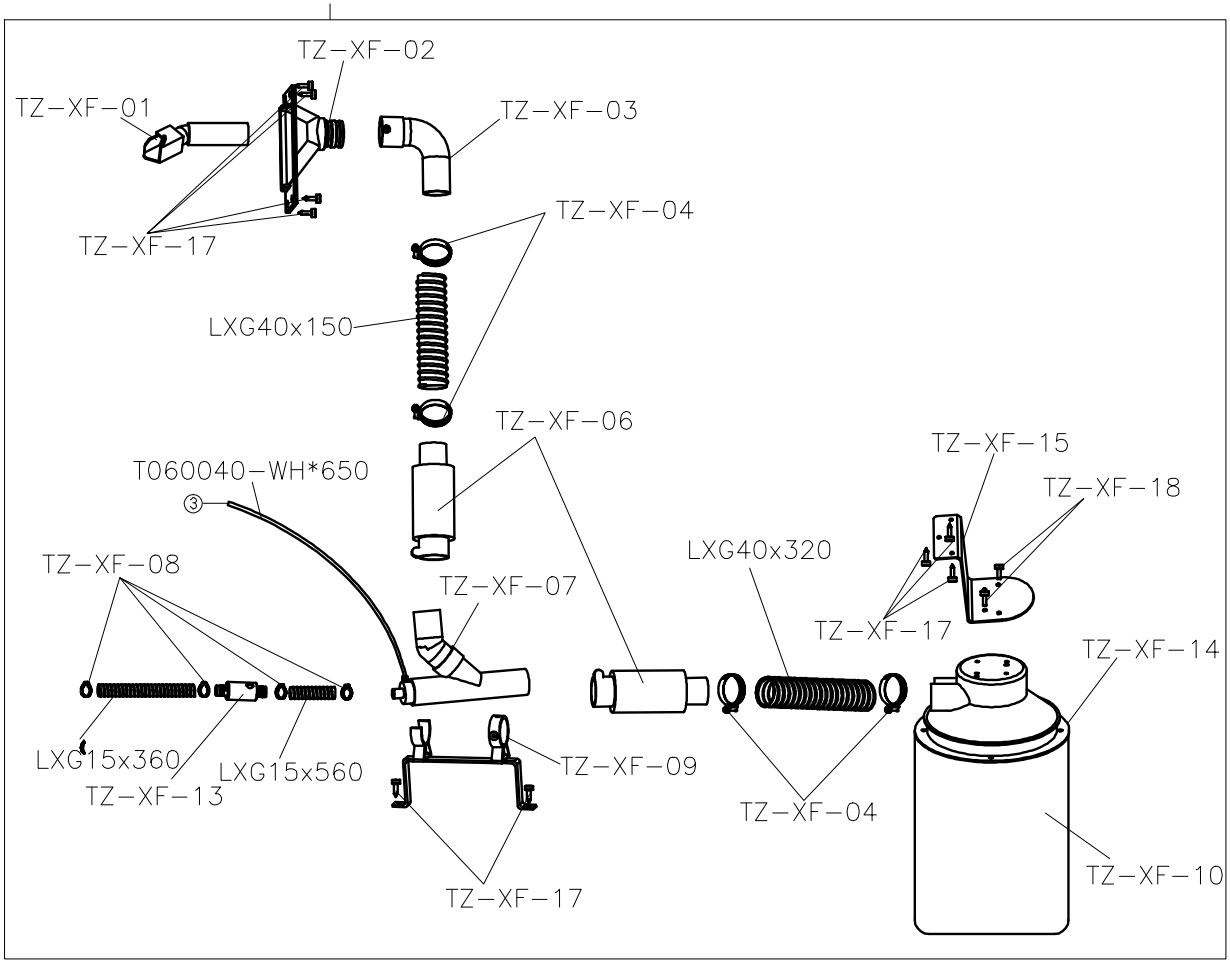

SiRUBA PARTS LIST	Series	Parts Group	Subclass / Remark	Page
	700L	TW-K		1/1
				Date
				2017/07/24

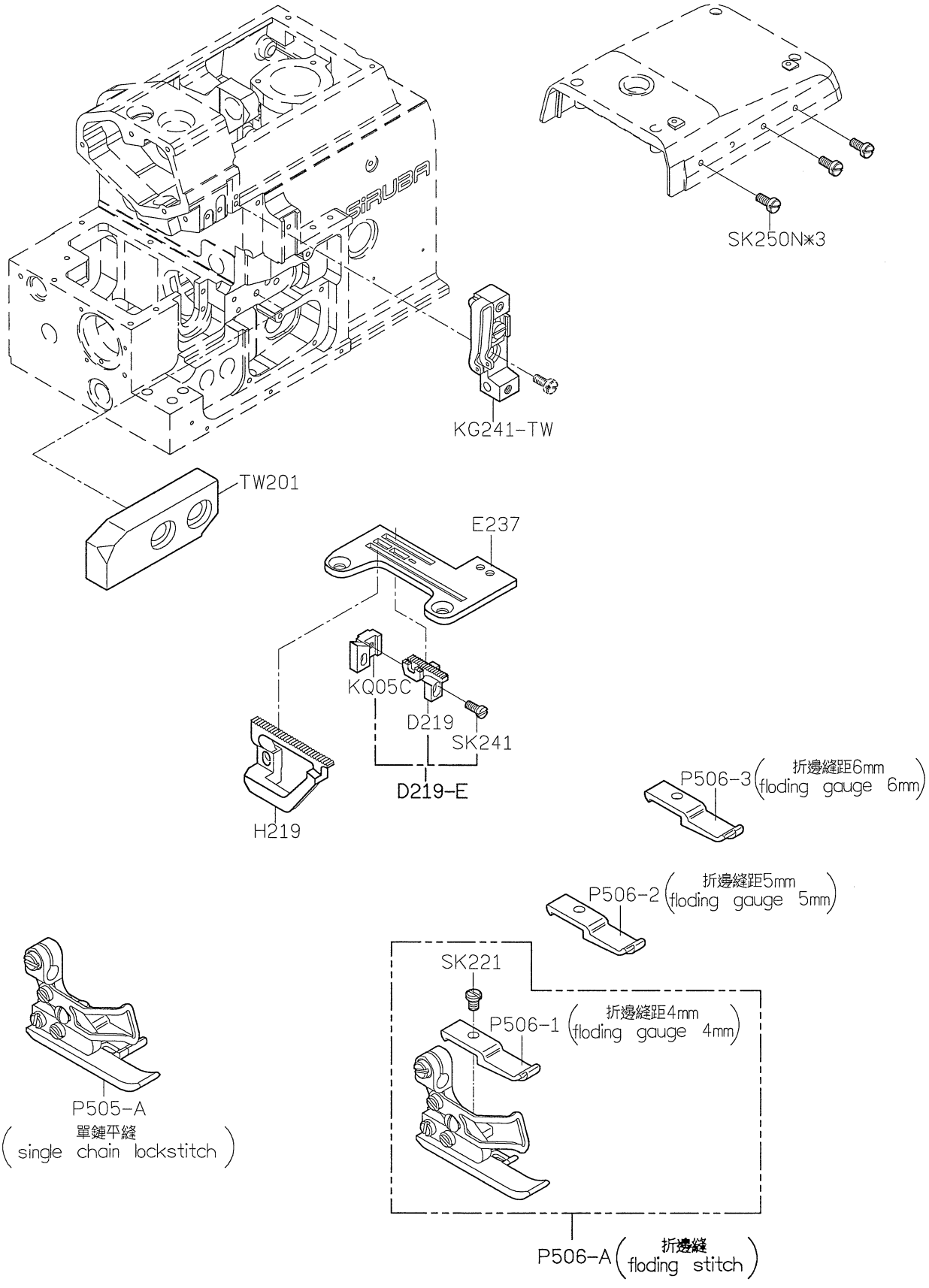

SIRUBA PARTS LIST	Series	Parts Group	Subclass / Remark	Page
	700L	UC-LD		1/6
				Date
				2021/12/01

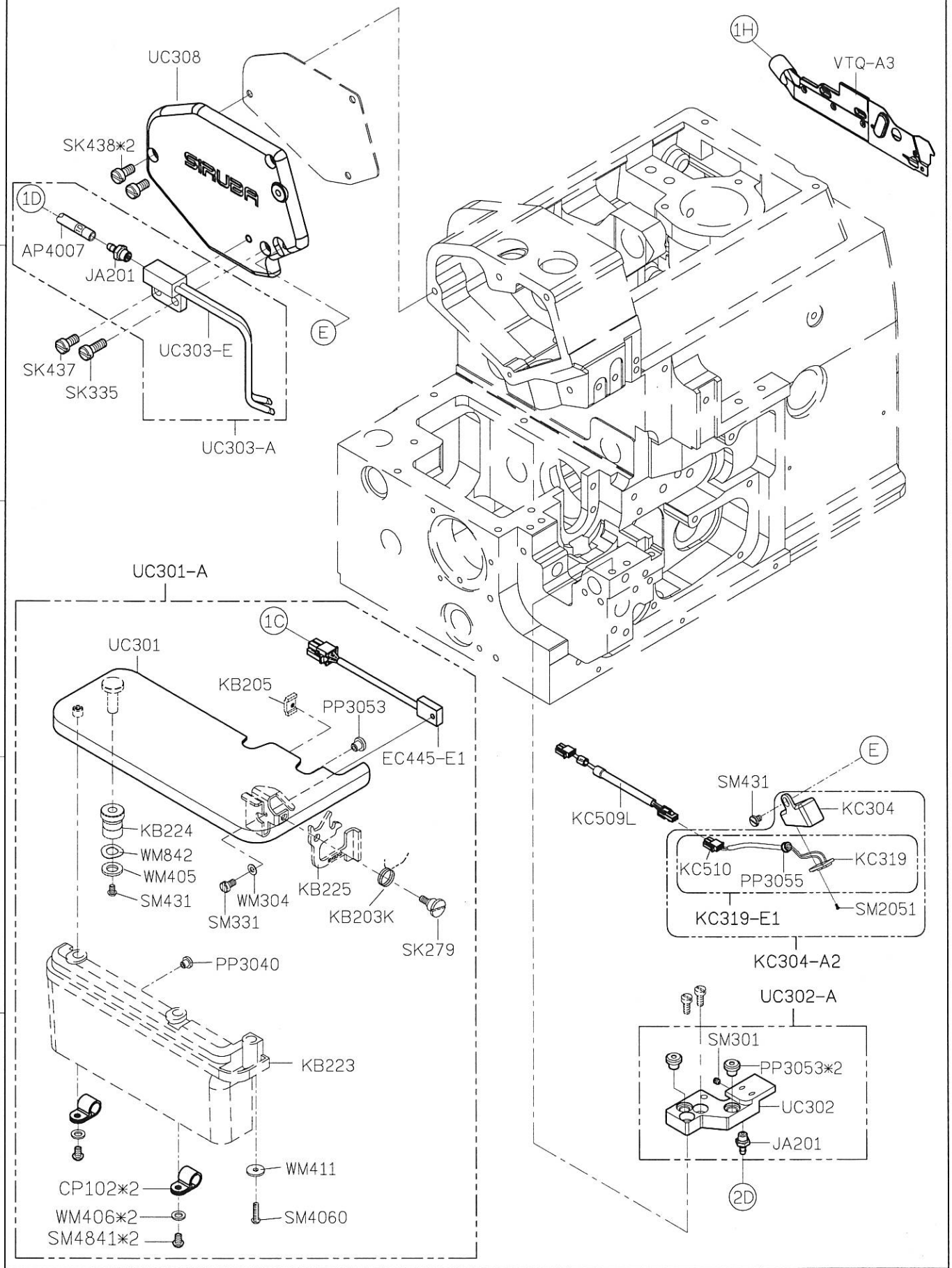

SiRUBA PARTS LIST	Series	Parts Group	Subclass / Remark	Page
	700L	UC-LD		2/6
				Date
				2021/12/01

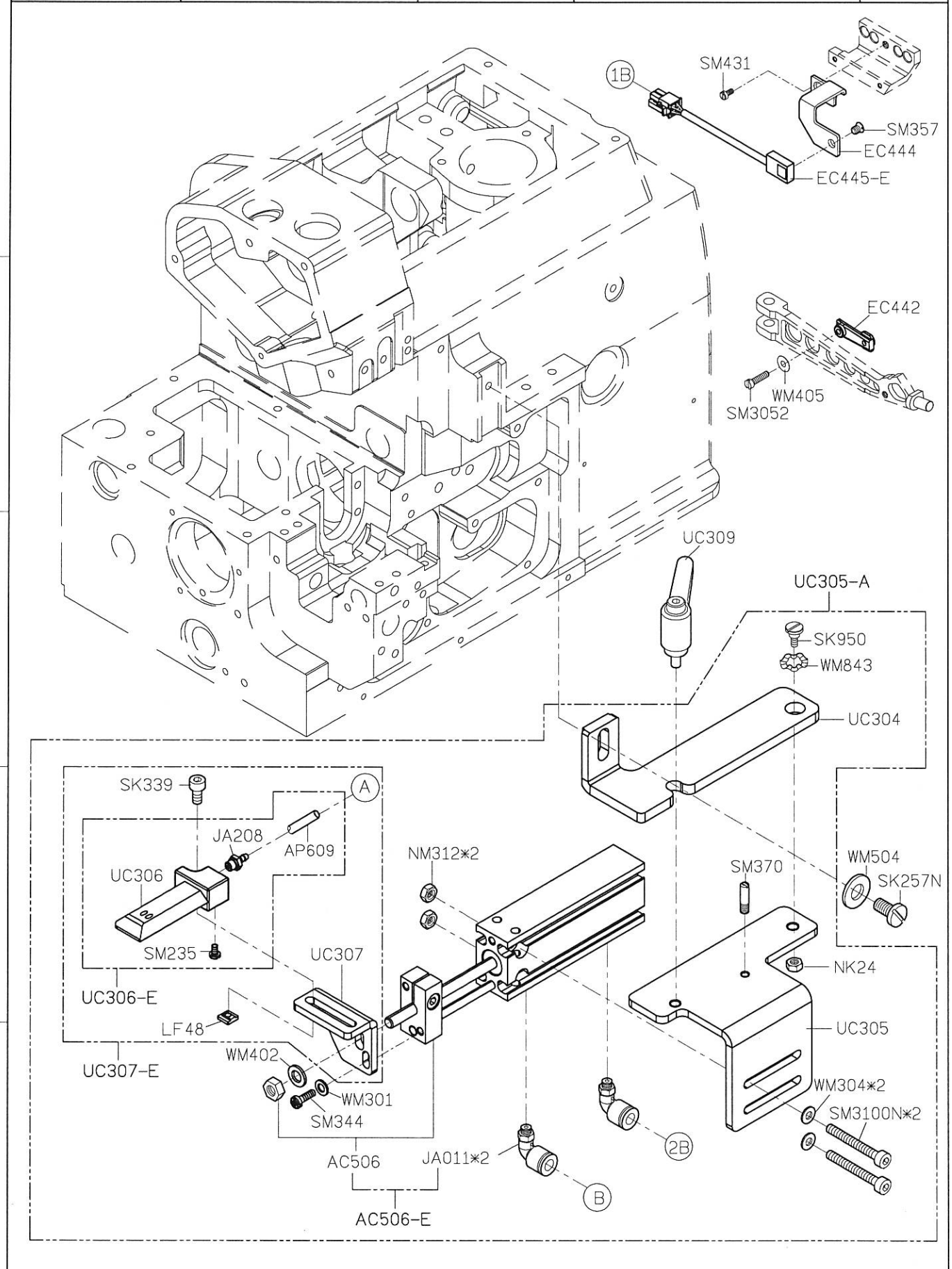

SiRUBA PARTS LIST	Series	Parts Group	Subclass / Remark	Page
	700L	UC-LD		3/6
				Date
				2021/12/01

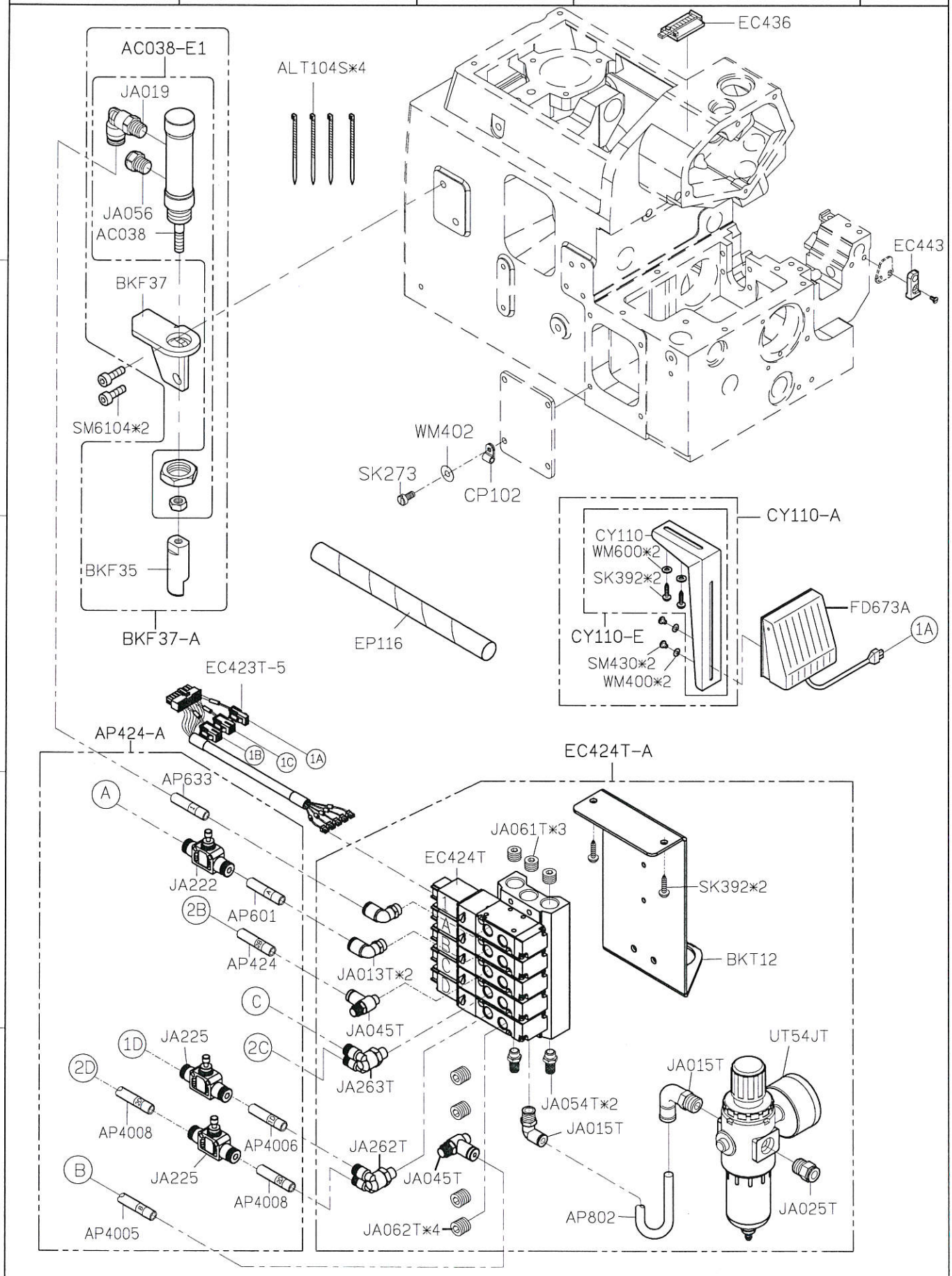

SiRUBA PARTS LIST	Series	Parts Group	Subclass / Remark	Page
	700L	UC-LD		4/6
				Date
				2021/12/01

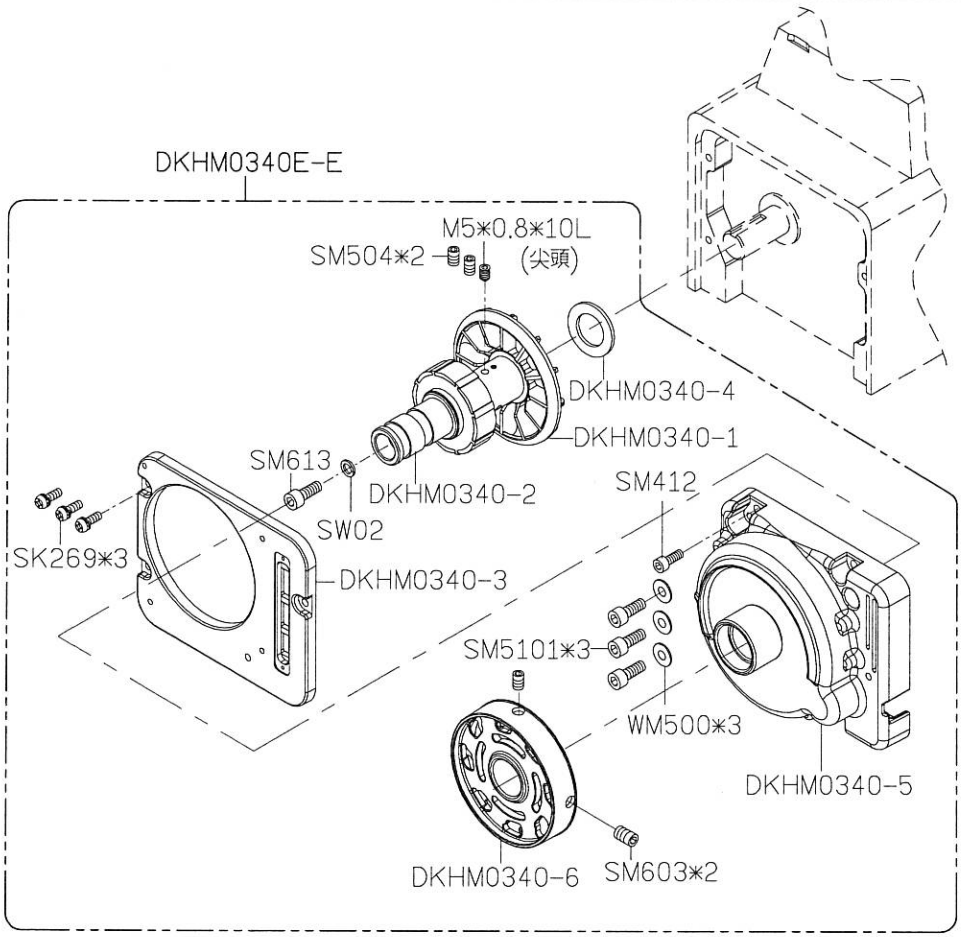

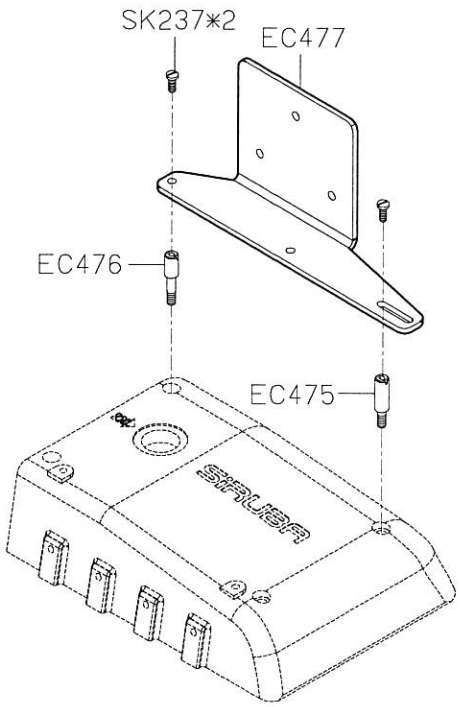

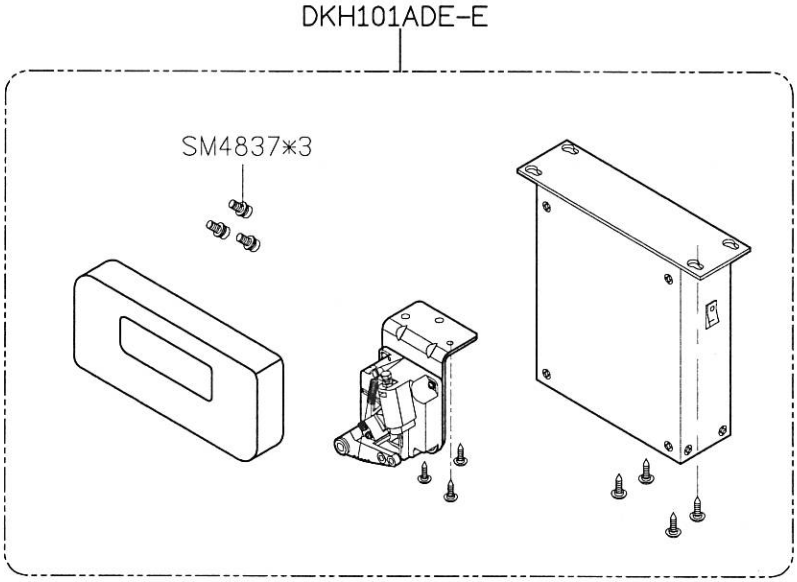

A B C D E

1 2 3 4 5

SIRUBA PARTS LIST	Series	Parts Group	Subclass / Remark	Page
	700L	UC-LD	Note 註記: 1) ★ Before installation, please check one side is Air IN, another side is Air OUT.	5/6
				Date
				2021/12/01

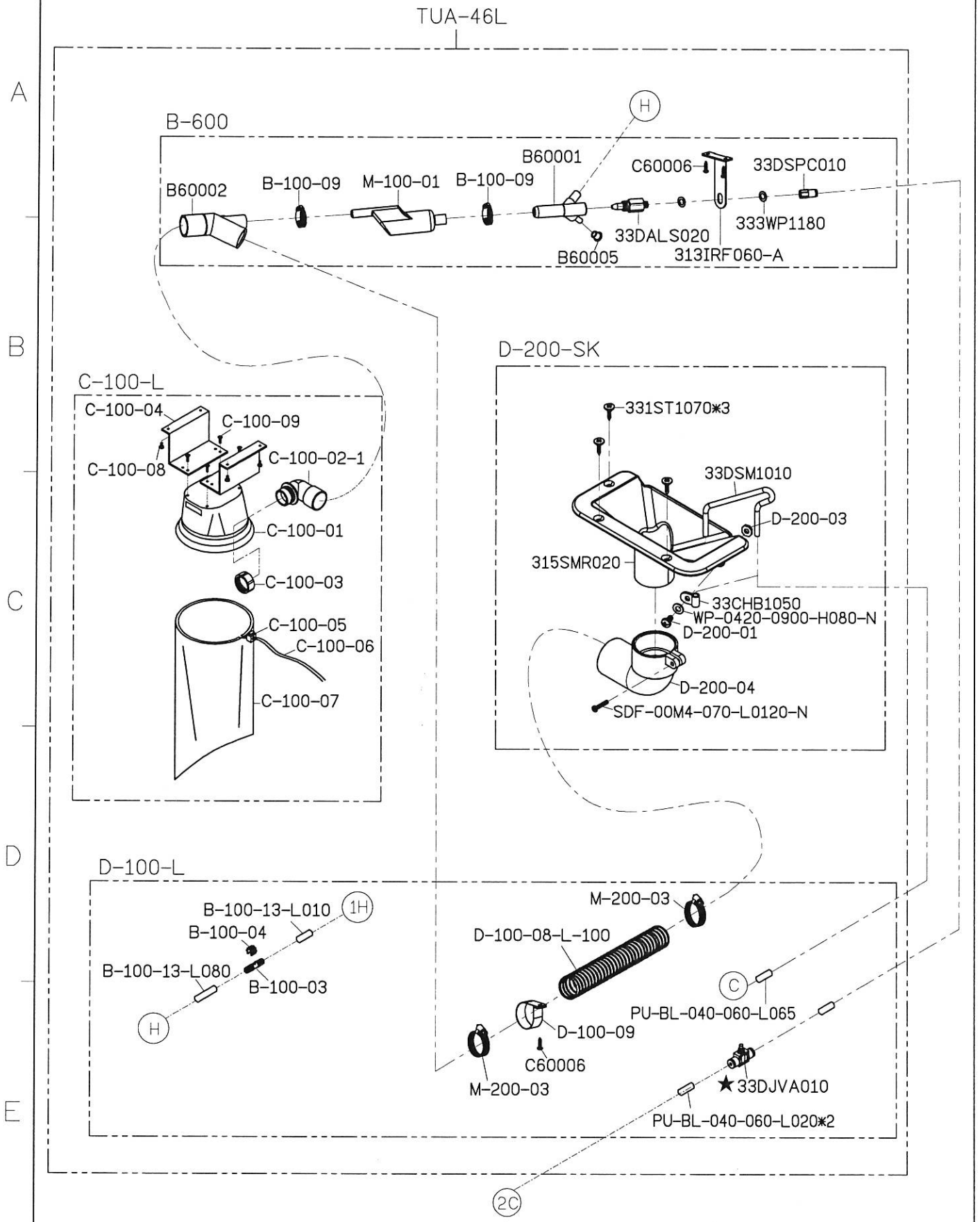

SIRUBA PARTS LIST	Series	Parts Group	Subclass / Remark	Page
	700L	UC-LD		6/6
				Date
				2021/12/01

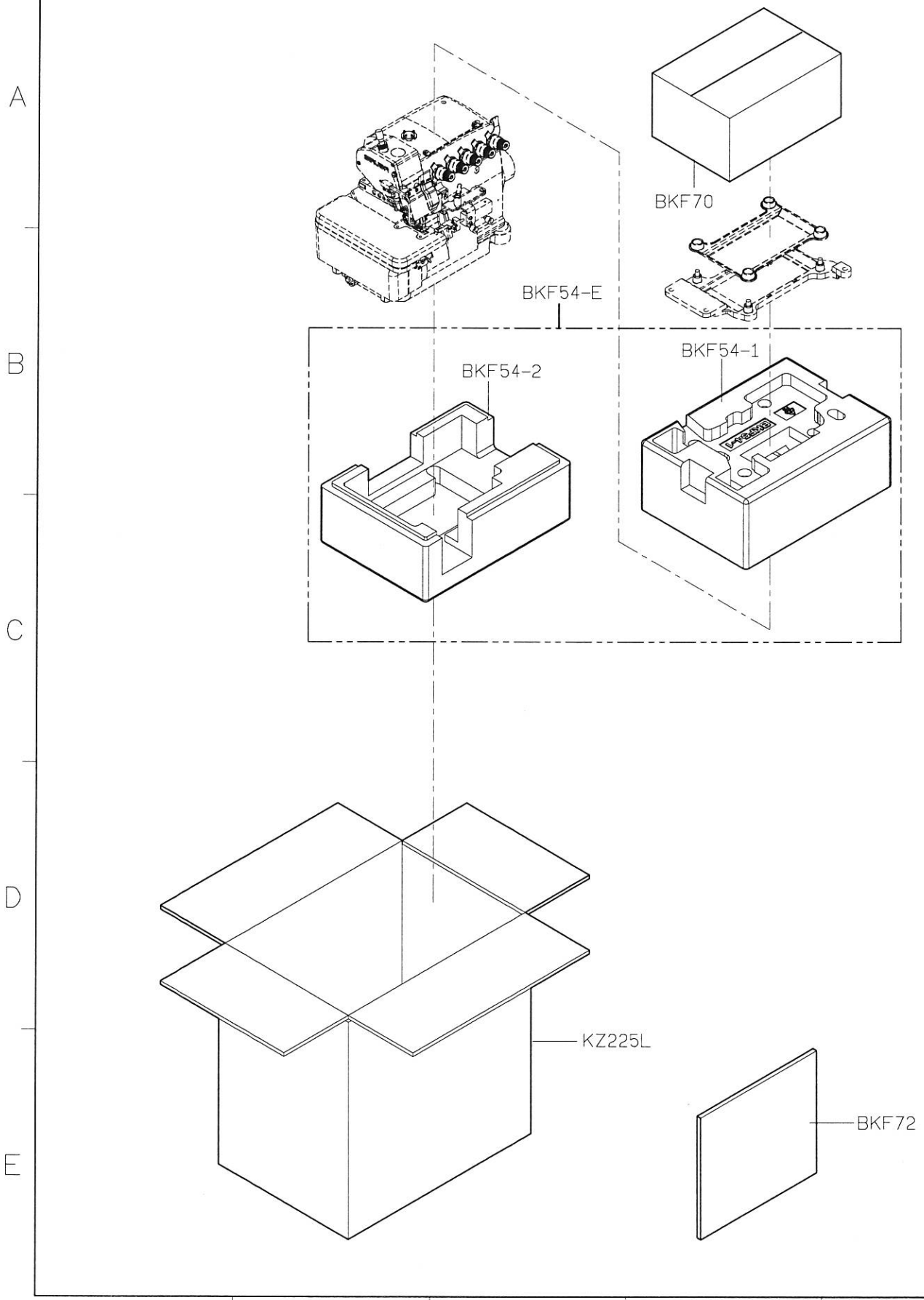

SIRUBA PARTS LIST	Series	Parts Group	Subclass / Remark	Page
	700K/700L	UC-L2	*機械式 *不含VT組及吸布屑組 *無抬押腳組 *FOR 內，外捲	1/4 Date 2020/05/12

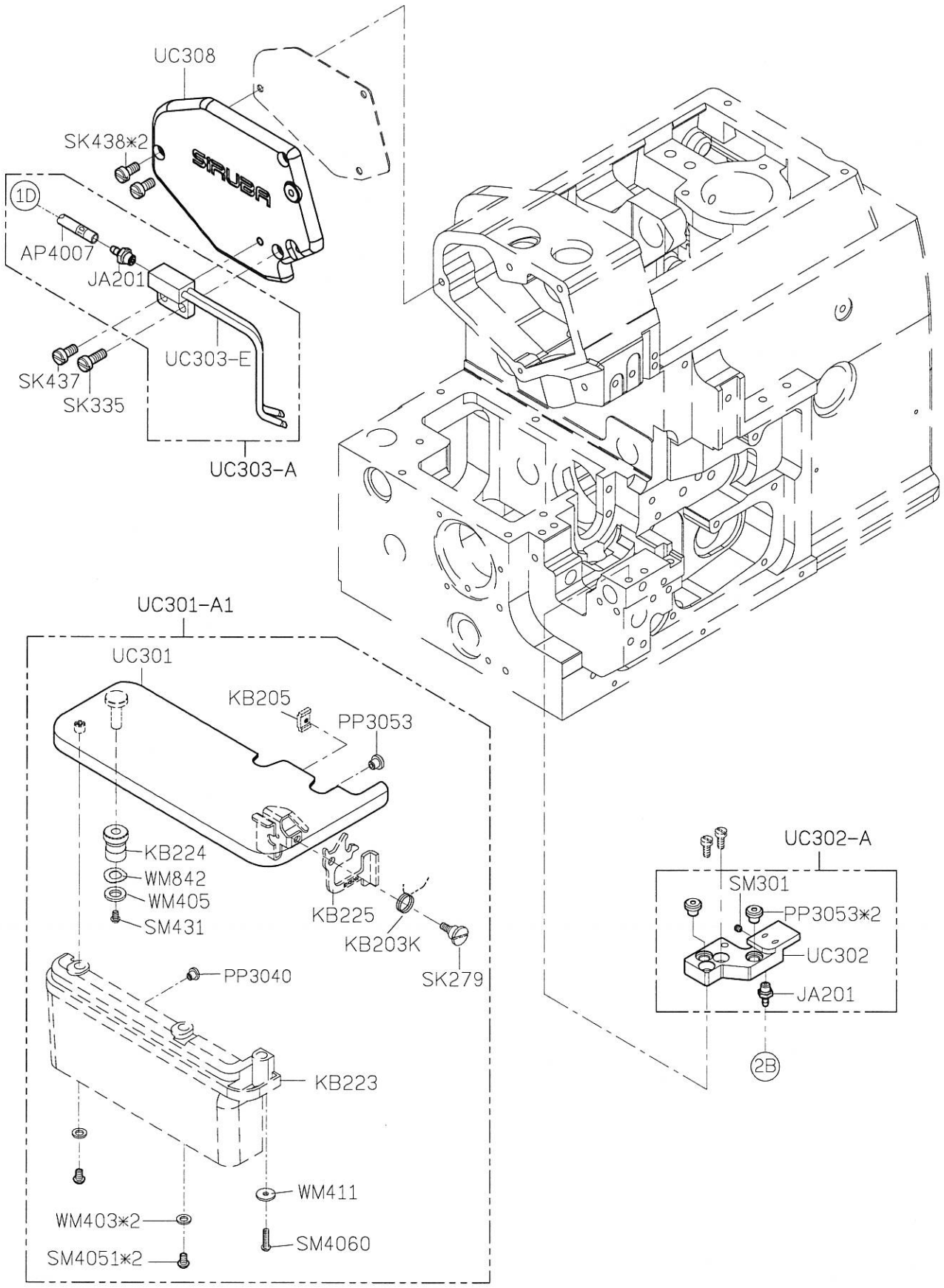

SiRUBA PARTS LIST	Series	Parts Group	Subclass / Remark	Page
	700K/700L	UC-L2	*機械式 *不含VT組及吸布屑組 *無抬押腳組 *FOR 內，外捲	2/4 Date 2020/05/12

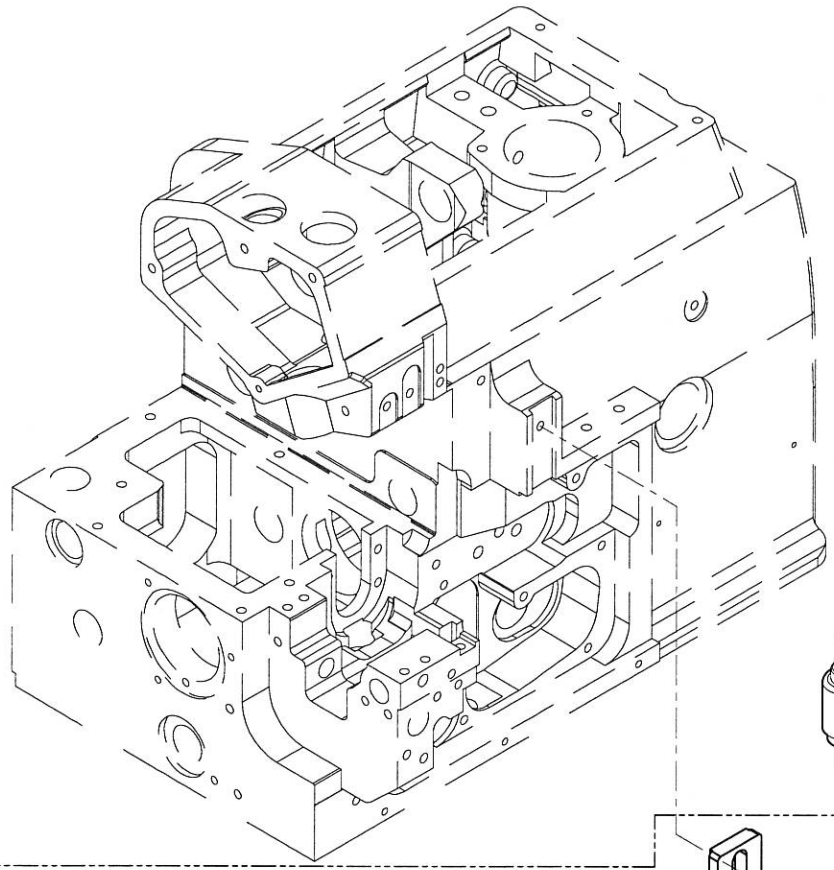

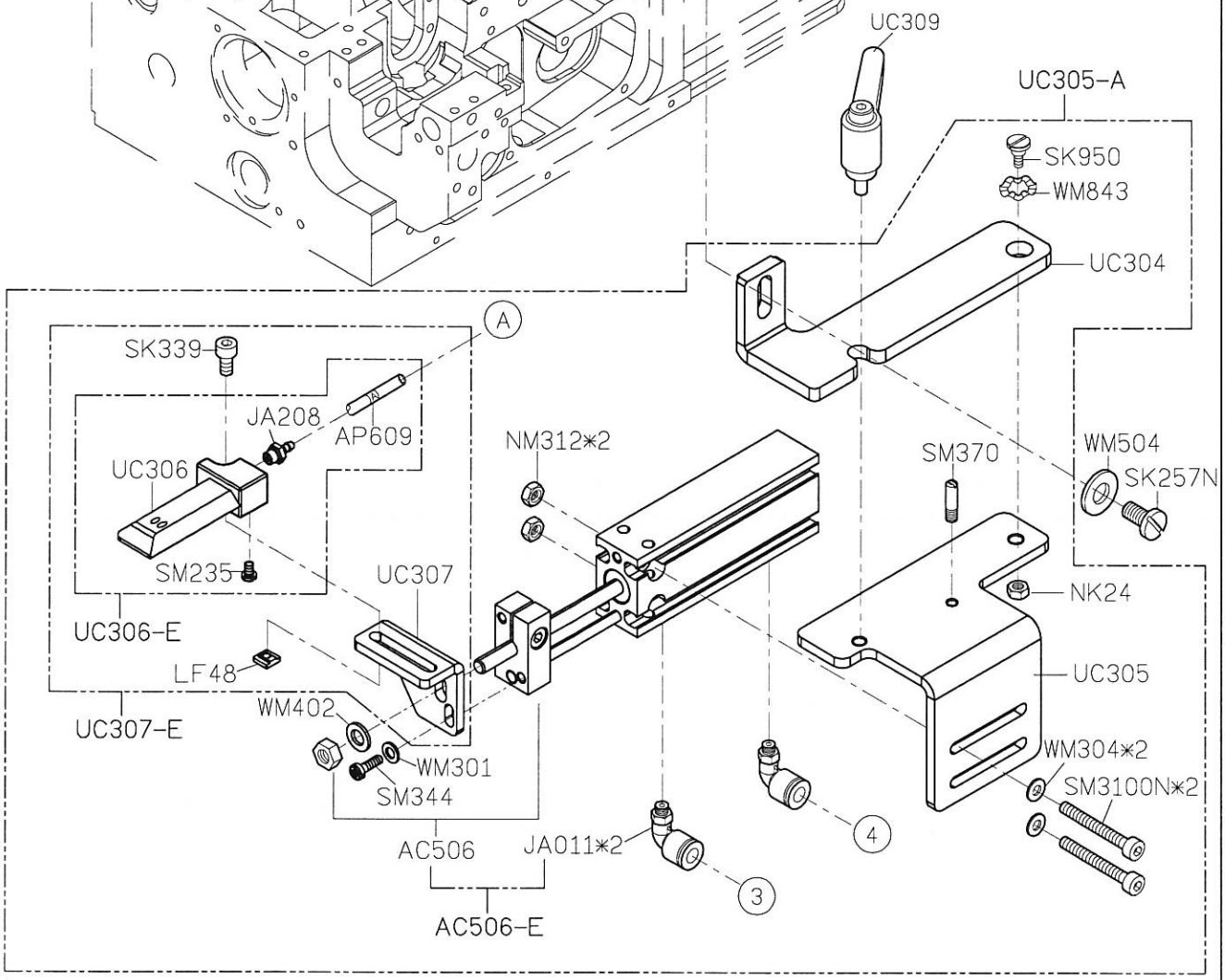

SIRUBA PARTS LIST	Series	Parts Group	Subclass / Remark	Page
	700K/700L	UC-L2	*機械式 *不含VT組及吸布屑組 *無抬押腳組 *FOR 內，外捲	3/4 Date 2020/05/12

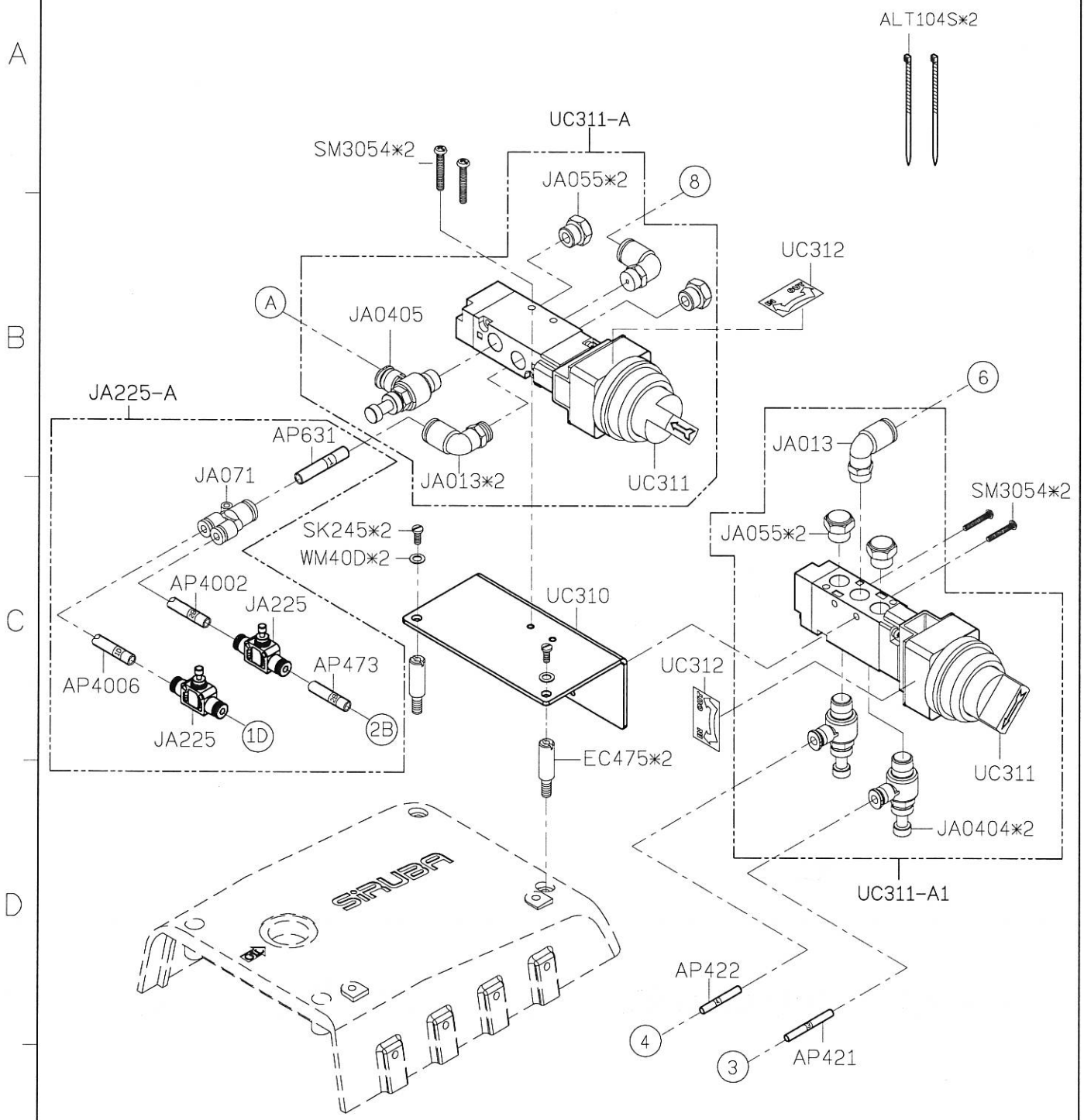

SiRUBA PARTS LIST	Series	Parts Group	Subclass / Remark	Page
	700K/700L	UC-L2	*機械式 *不含VT組及吸布屑組 *無抬押腳組 *FOR 內，外捲	4/4 Date 2020/05/12

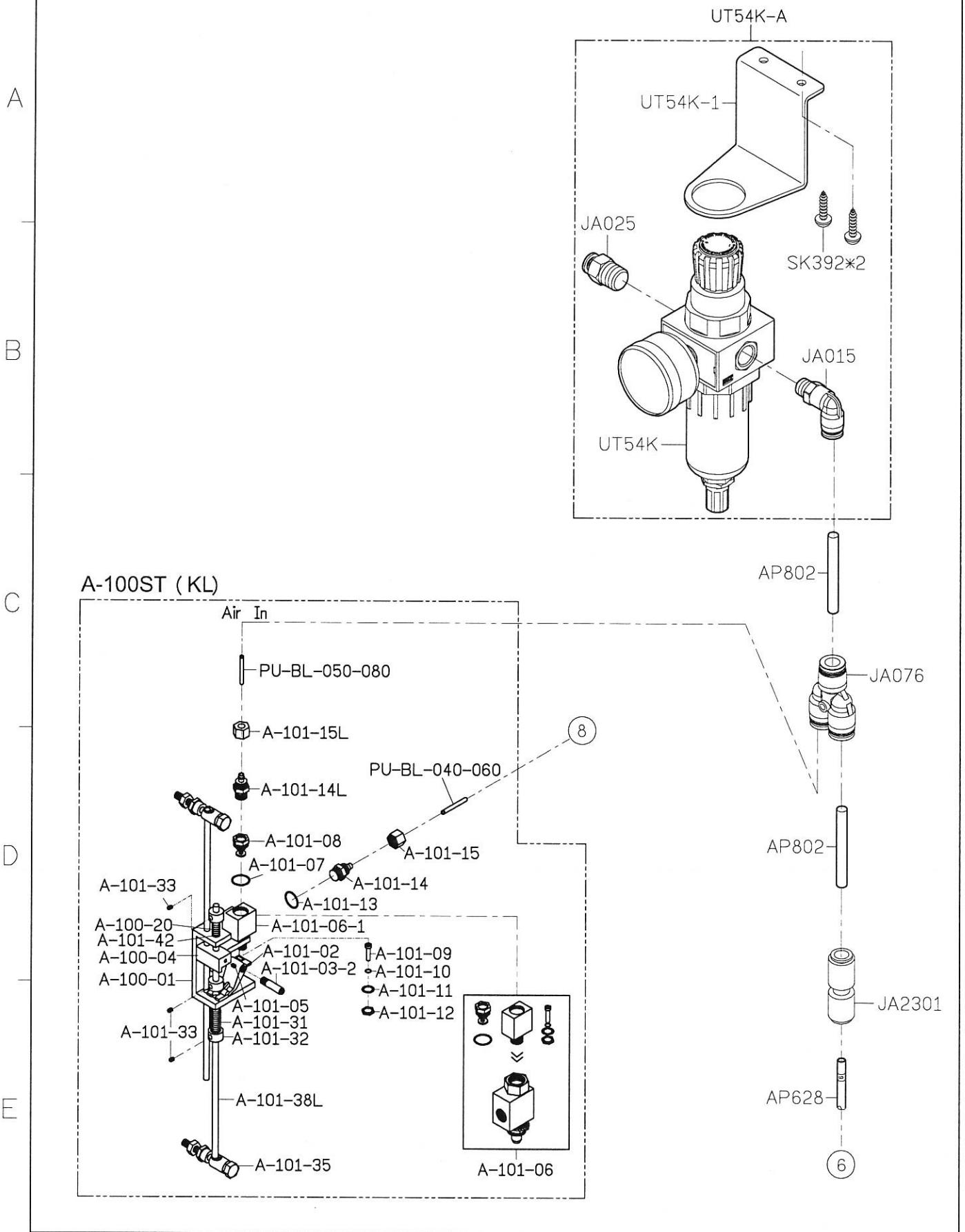

SIRUBA PARTS LIST	Series	Parts Group	Subclass / Remark	Page
	700K/700L	UC-L3	*機械式 *不含VT組及吸布屑組 *無抬押腳組 *FOR 外捲	1/2
				Date
				2020/04/27

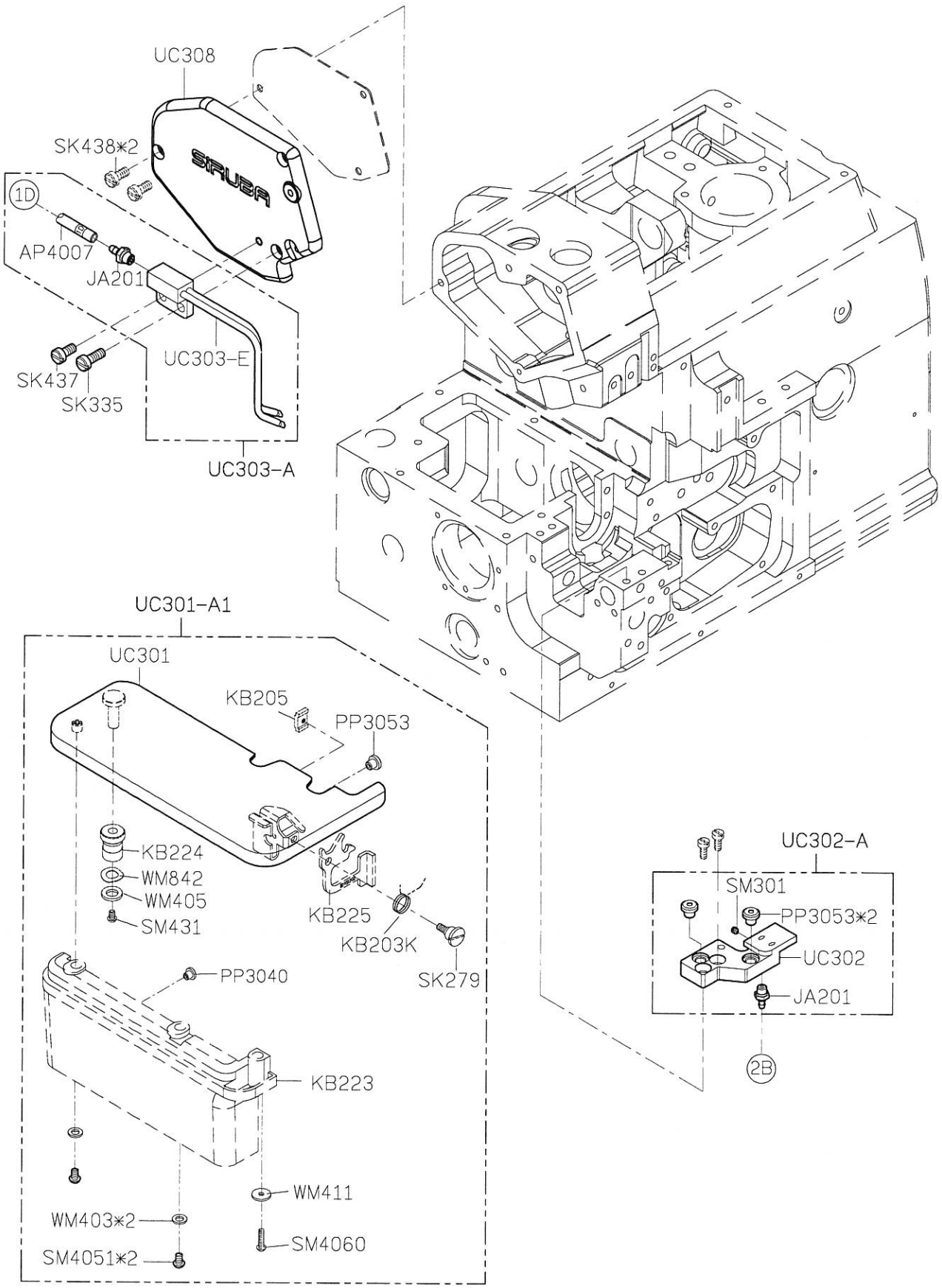

SiRUBA PARTS LIST	Series	Parts Group	Subclass / Remark	Page
	700K/700L	UC-L3	*機械式 *不含VT組及吸布屑組 *無抬押腳組 *FOR 外捲	2/2 Date 2020/04/27

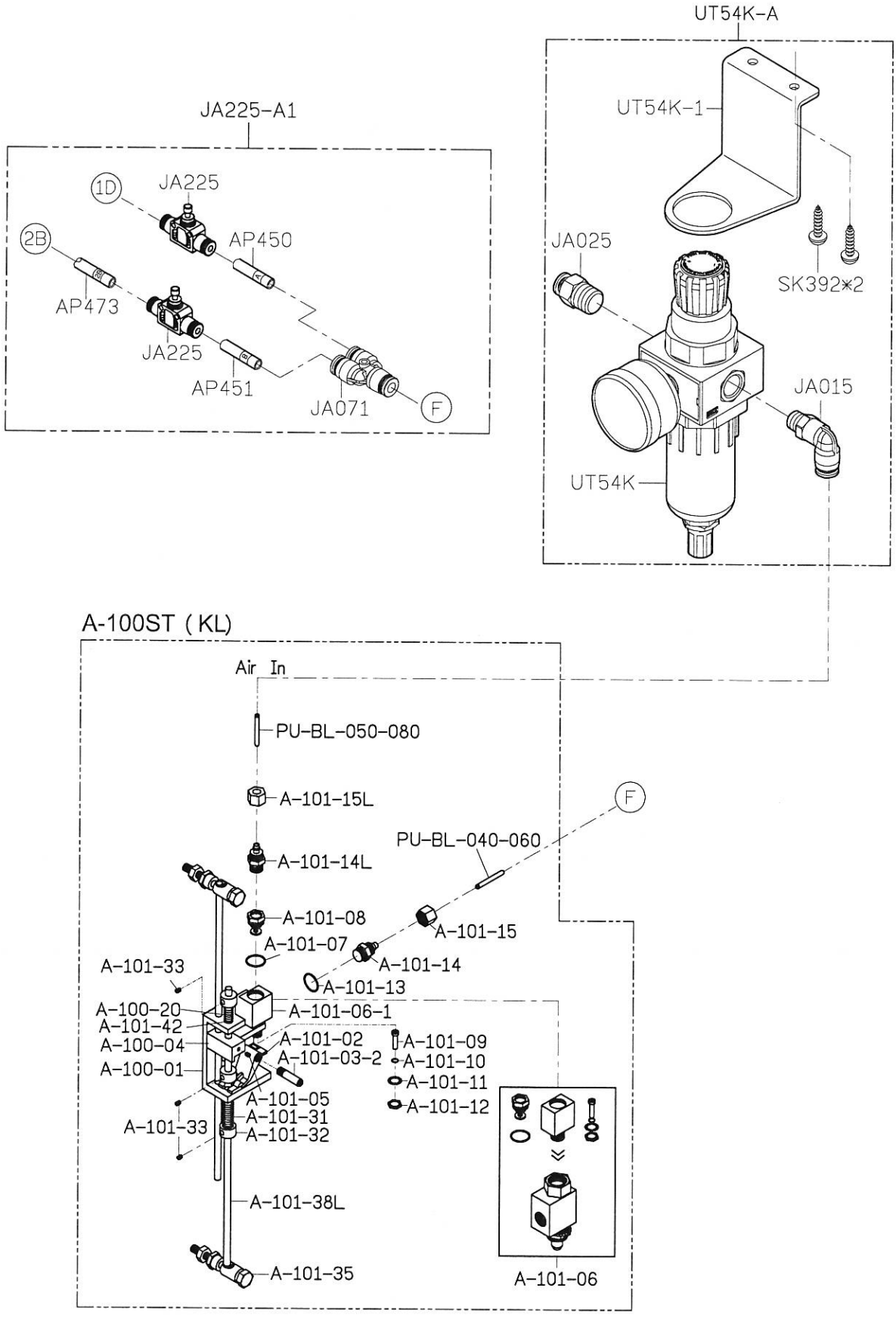

SIRUBA PARTS LIST	Series	Parts Group	Subclass / Remark	Page
	700L 600KP	VT		1/2
				Date
				2023/03/28

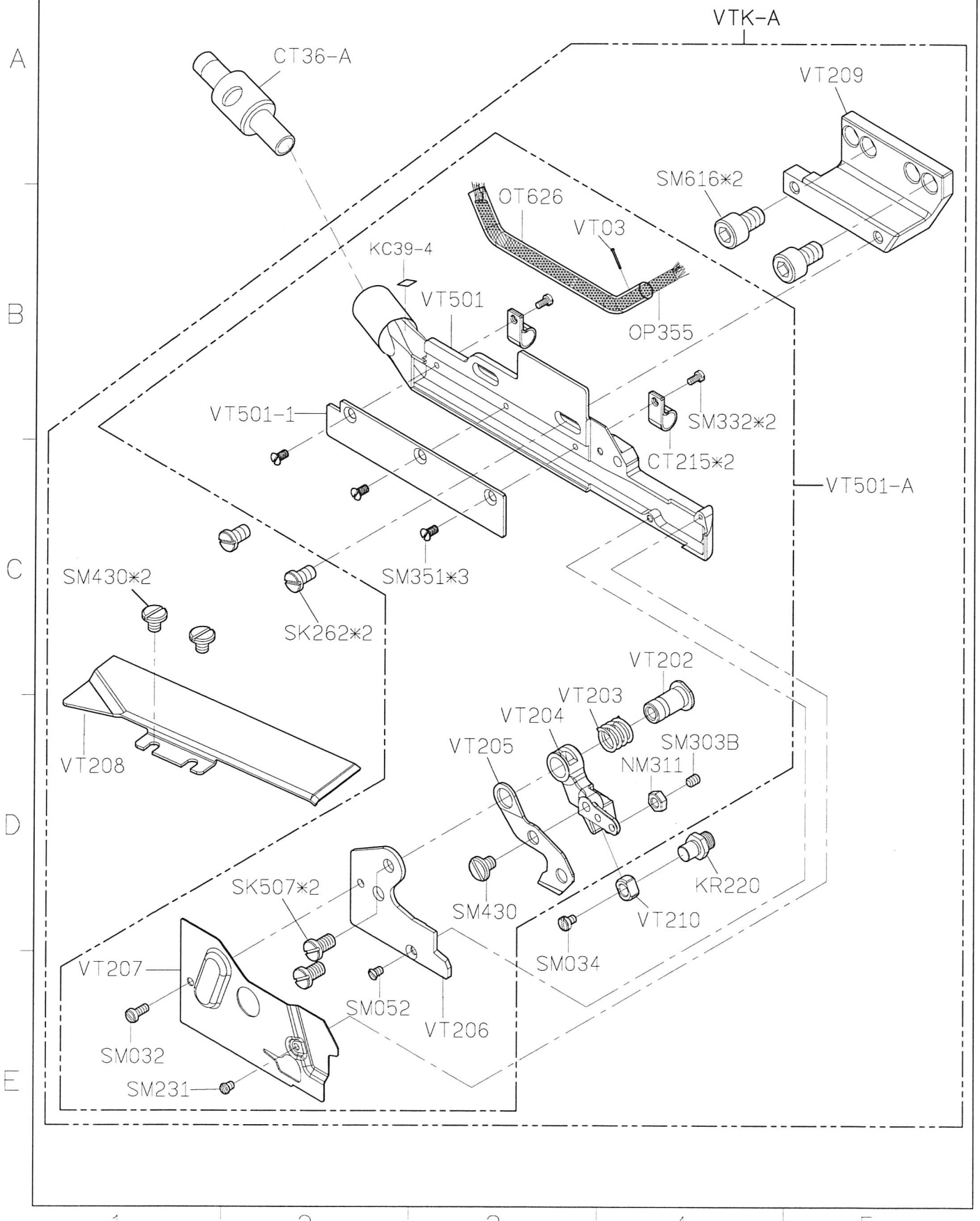

SIRUBA PARTS LIST	Series	Parts Group	Subclass / Remark	Page
	700L 600KP	VT		2/2
				Date
				2023/03/28

電控箱代號	定 義	備 註
DKU201NDE-E	一般簡易直驅用	DKUL1-0
DKU501ADE-E	電磁閥集塵直驅用	DKUL1-5

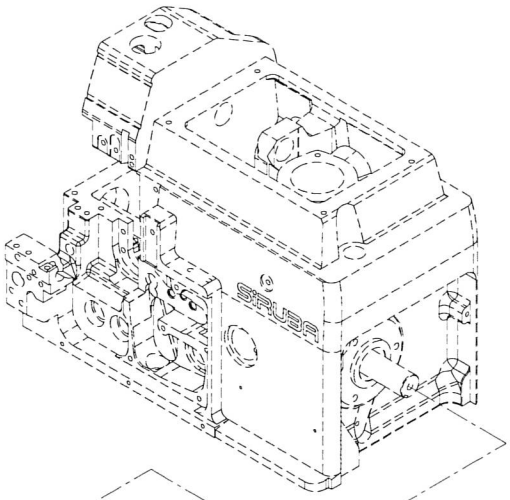

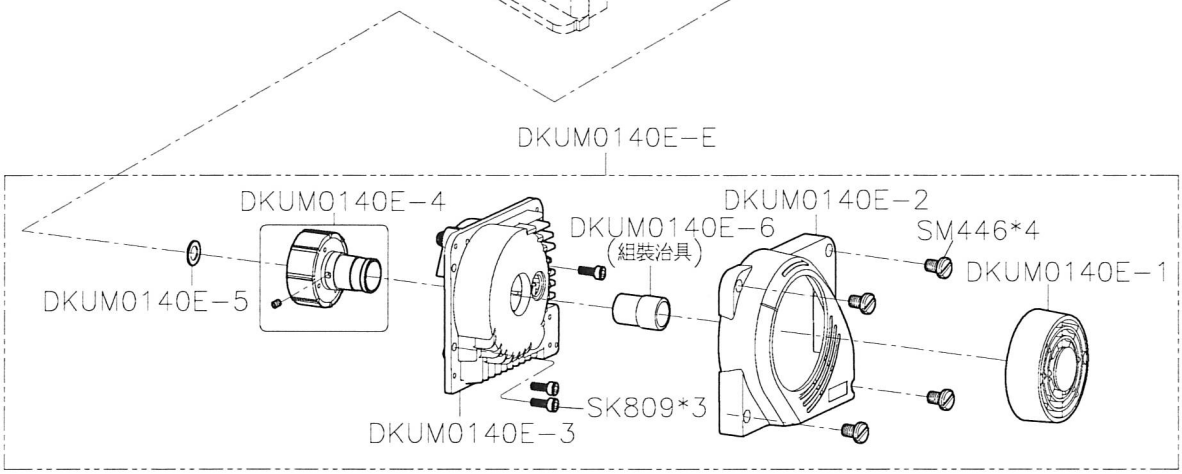

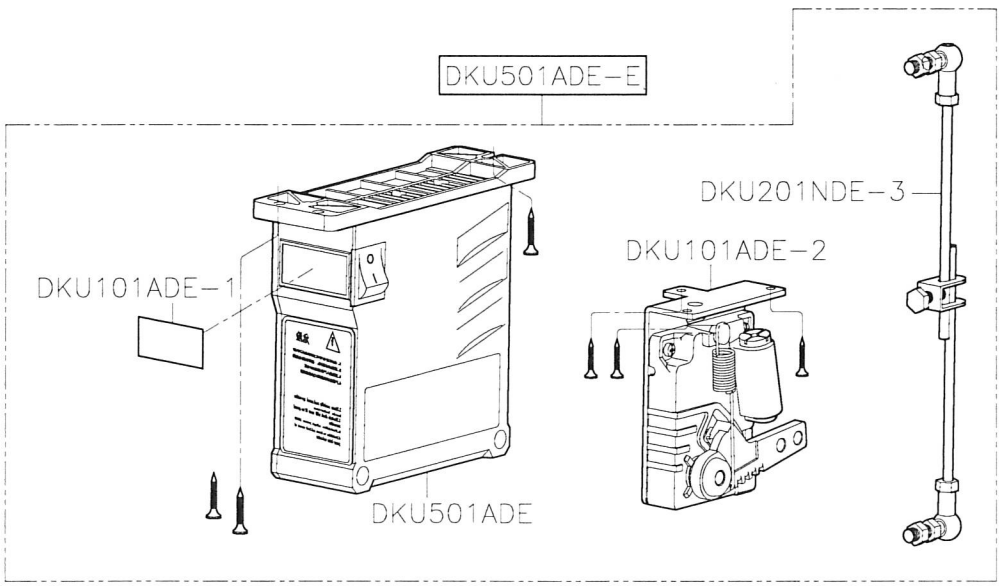

SIRUBA PARTS LIST	Series	Parts Group	Subclass / Remark	Page
	700L	VT-K		1/1
				Date
				2017/04/27

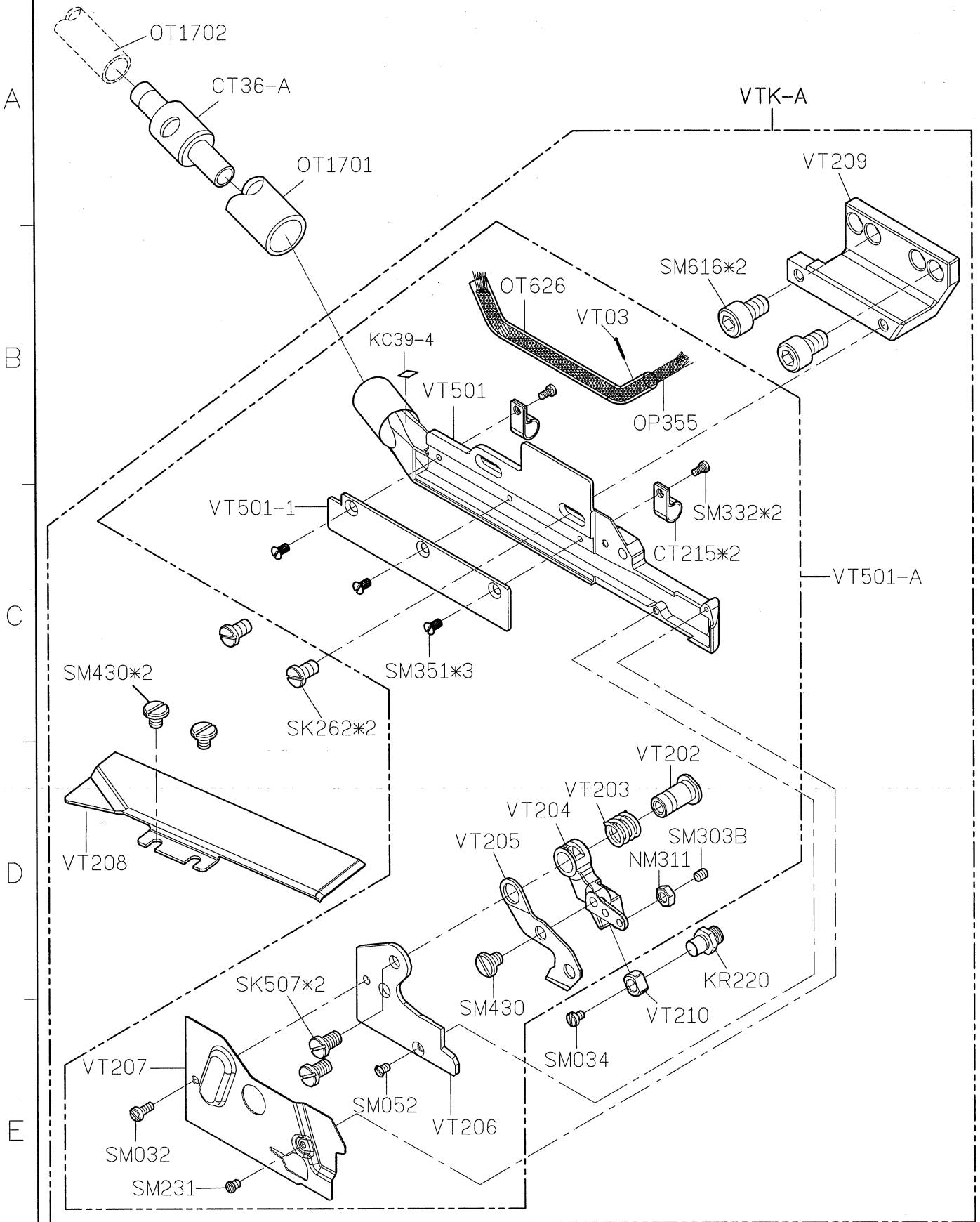

SIRUBA PARTS LIST	Series	Parts Group	Subclass / Remark	Page
	700L	VTA-L		1/6
				Date
				2021/12/01

VTA-A1

KS-308046-91Y01/KSD

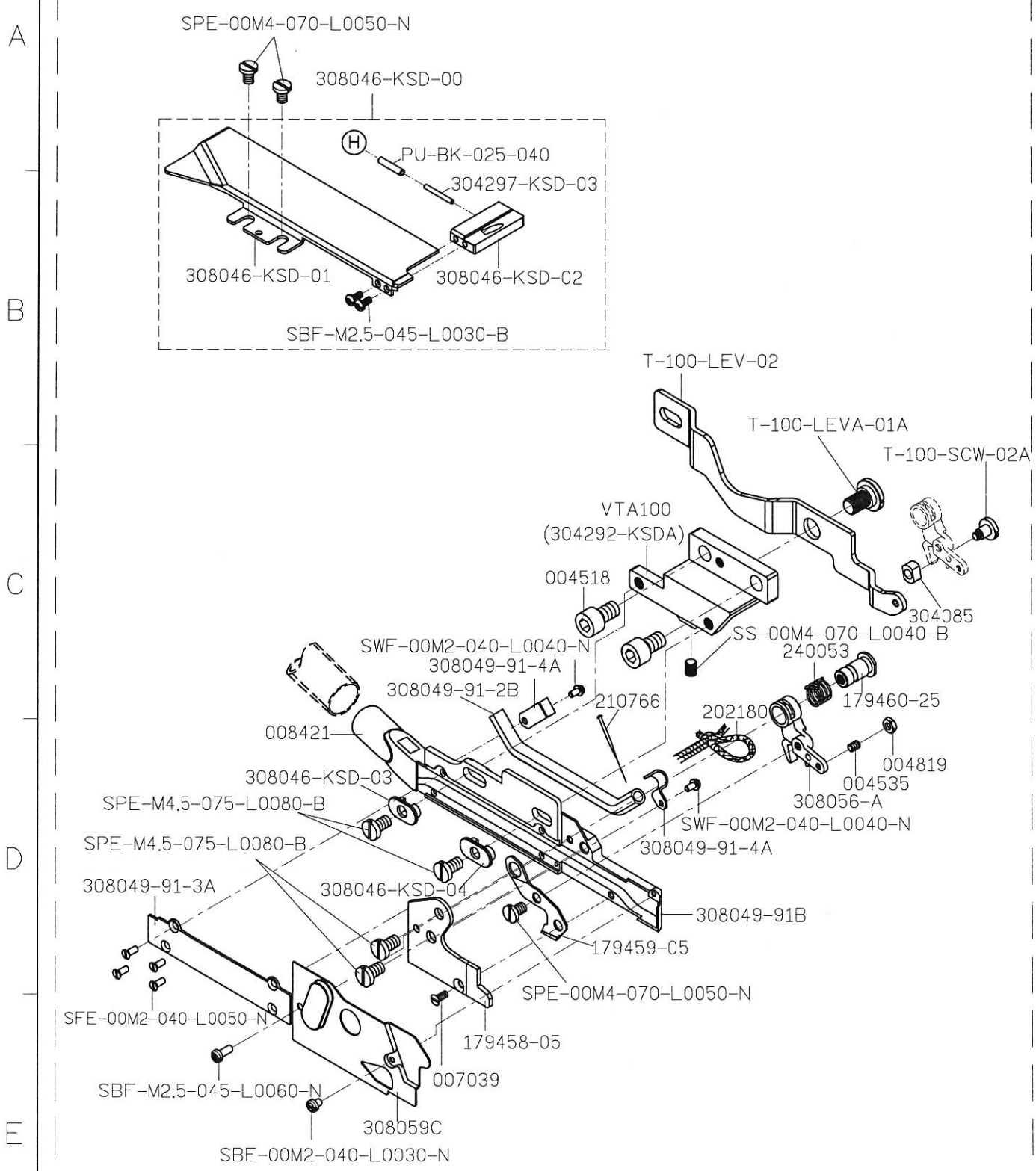

SIRUBA PARTS LIST	Series	Parts Group	Subclass / Remark	Page
	700L	VTA-L		2/6
				Date
				2021/12/01

VTA-A1

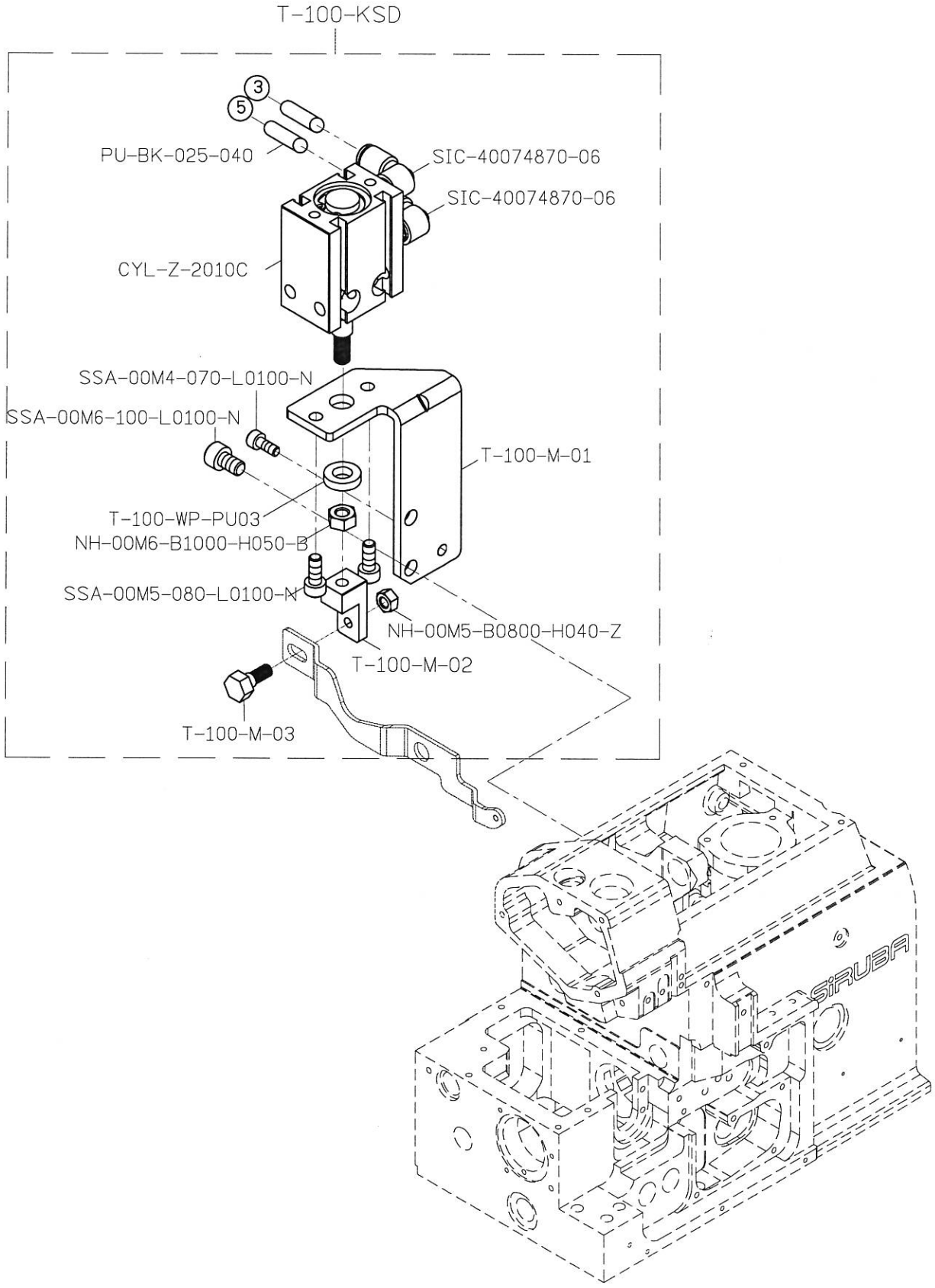

SIRUBA PARTS LIST	Series	Parts Group	Subclass / Remark	Page
	700L	VTA-L		3/6
				Date
				2022/12/26

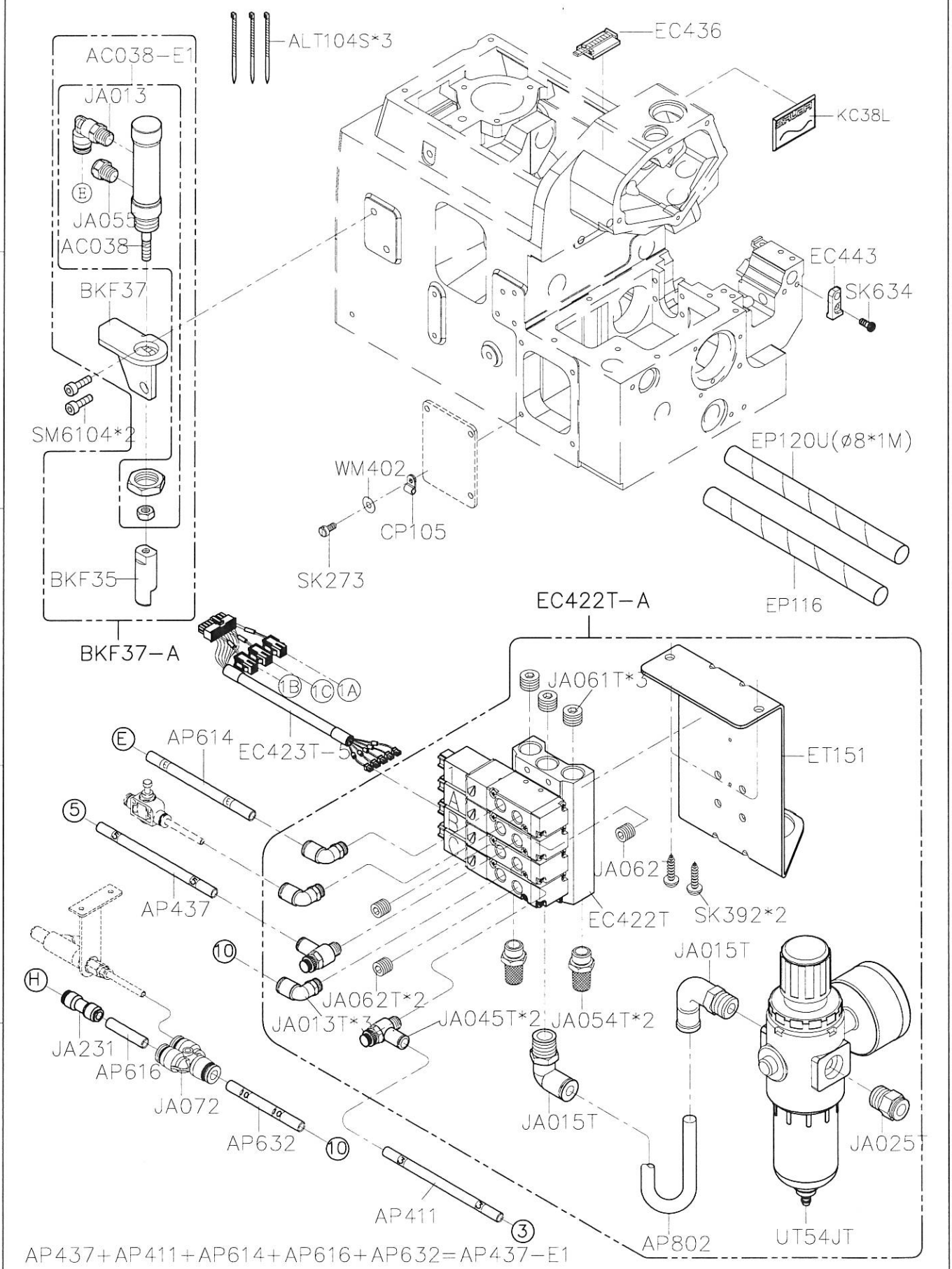

SIRUBA PARTS LIST	Series	Parts Group	Subclass / Remark	Page
	700L	VTA-L		4/6
				Date
				2021/12/01

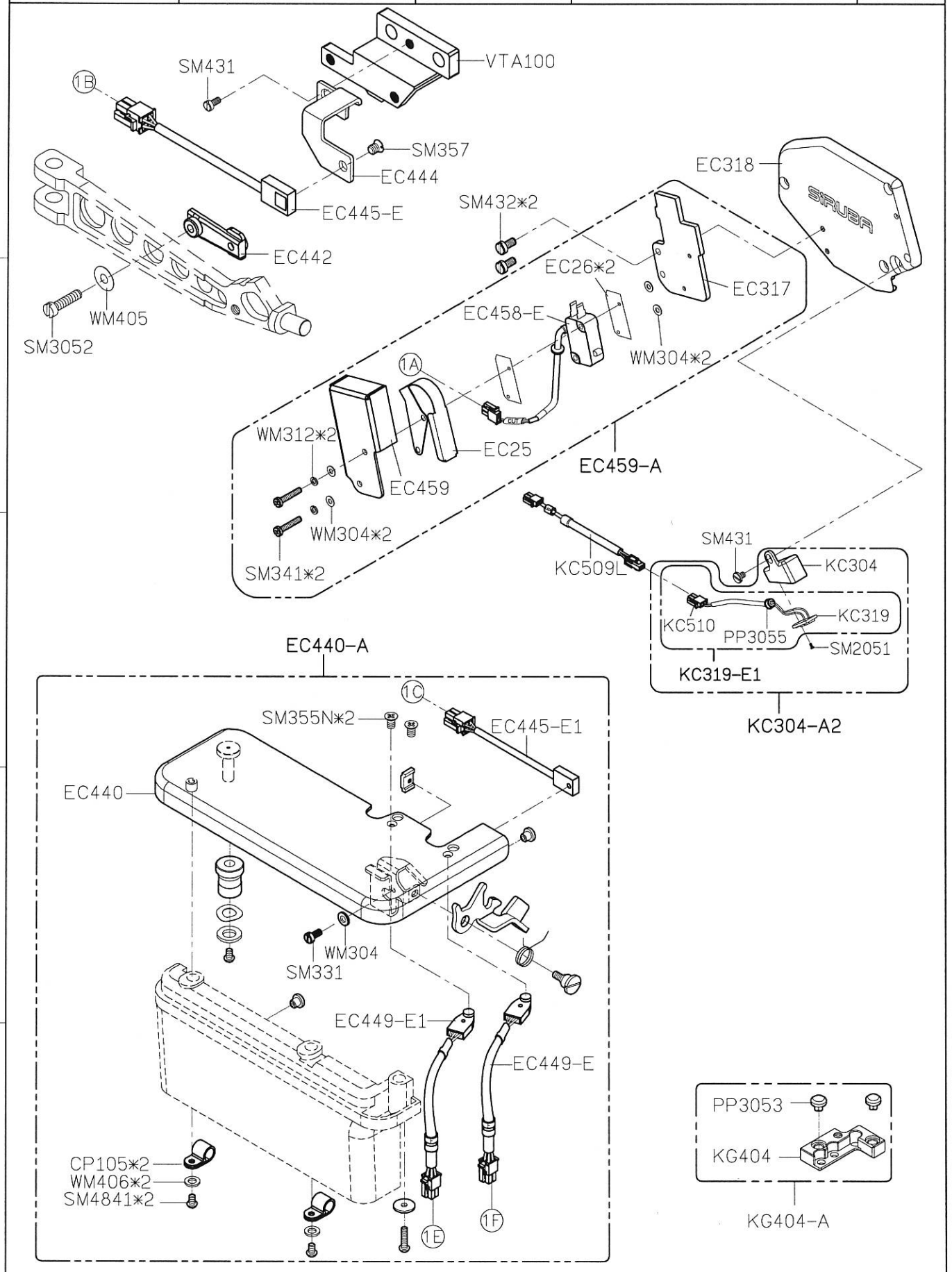

SiRUBA PARTS LIST	Series	Parts Group	Subclass / Remark	Page
	700L	VTA-L		5/6
				Date
				2021/12/01

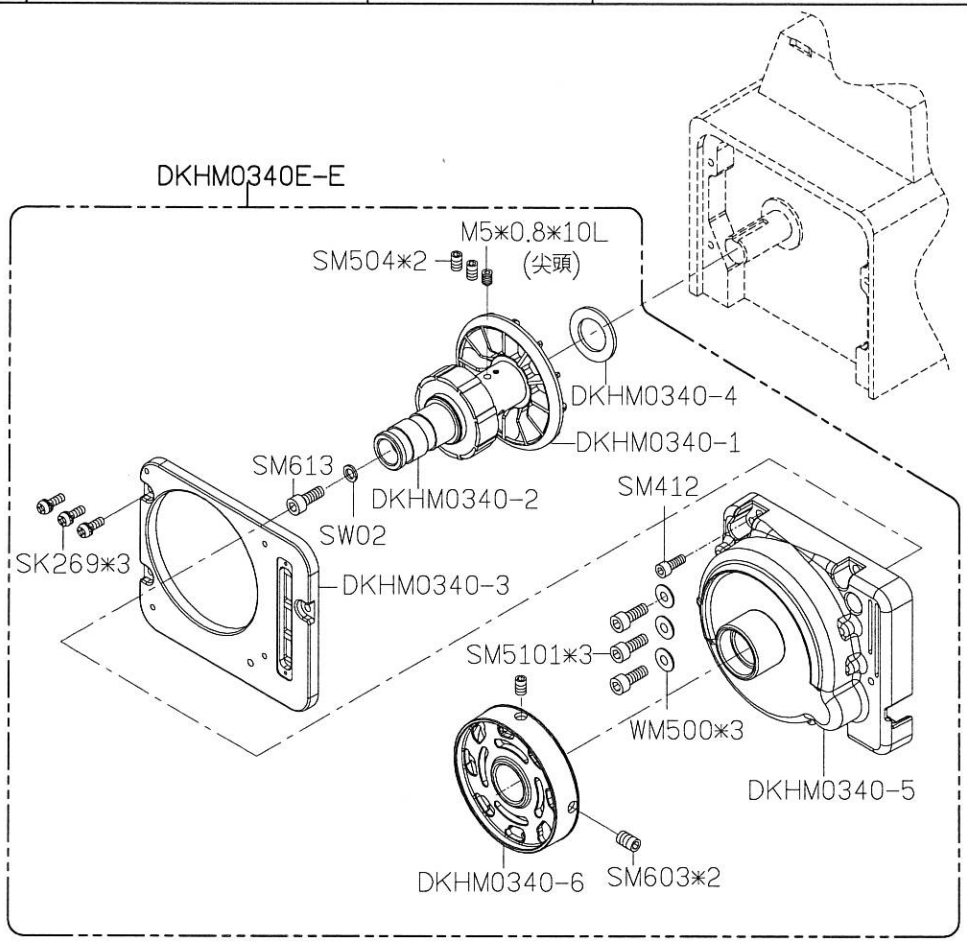

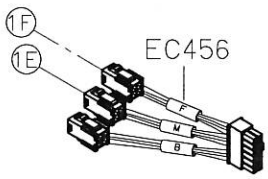

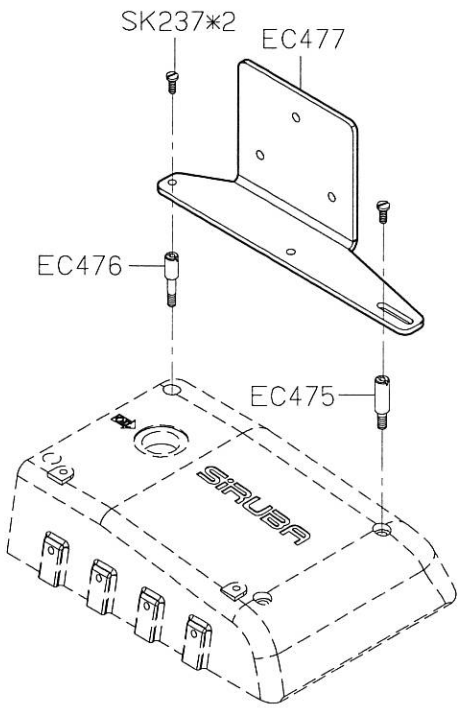

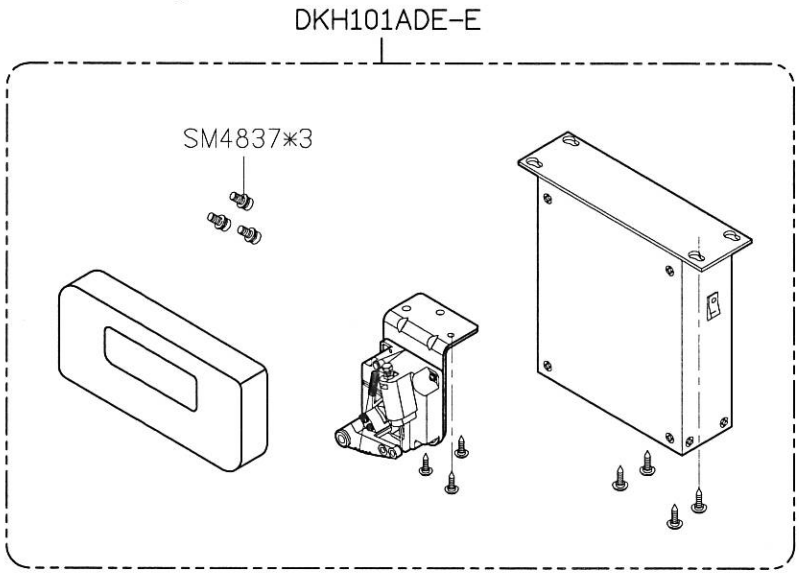

SiRUBA PARTS LIST	Series	Parts Group	Subclass / Remark	Page
	700L	VTA-L		6/6
				Date
				2021/12/01

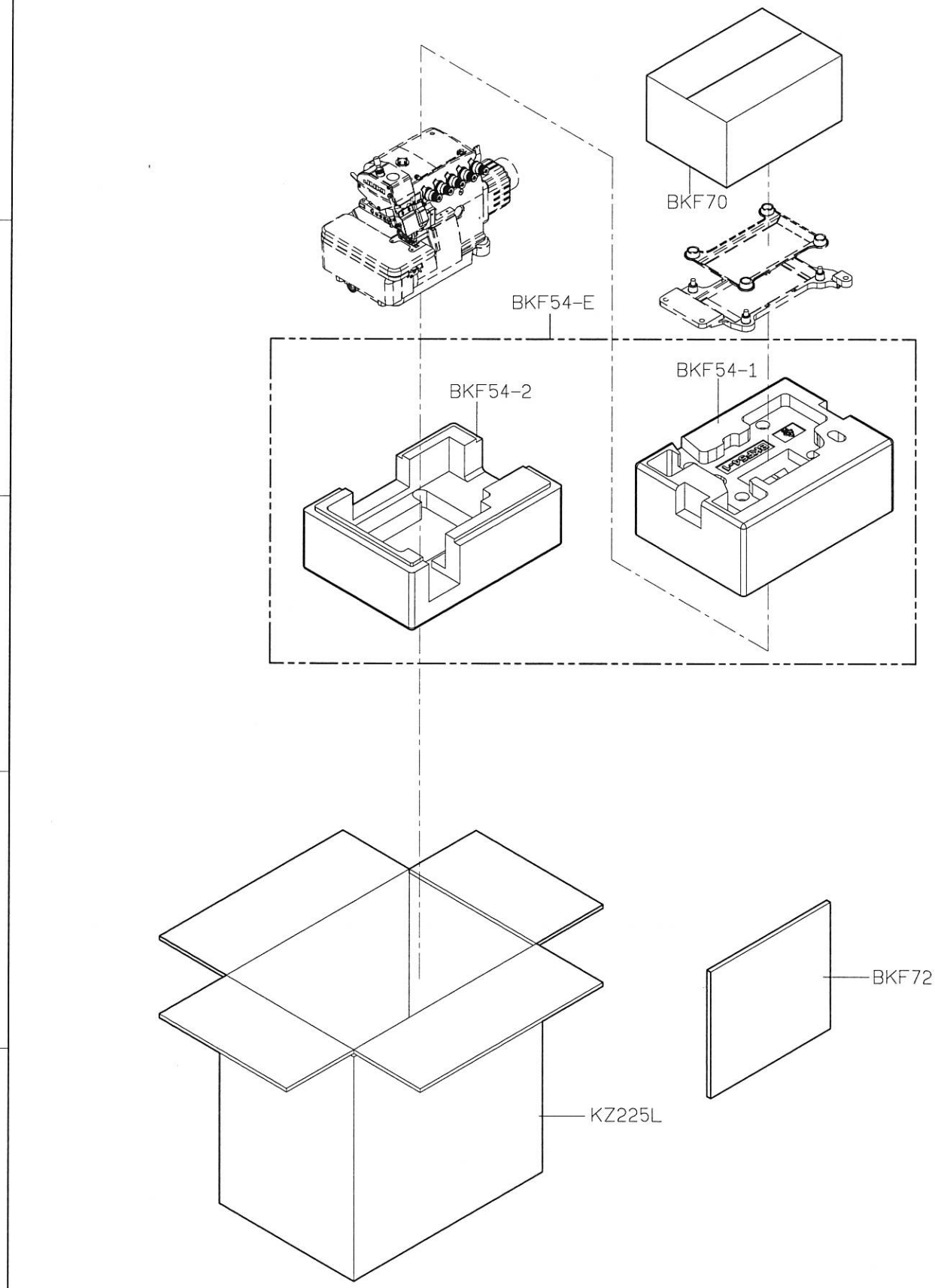

SIRUBA PARTS LIST	Series	Parts Group	Subclass / Remark	Page
	700L	VTE-L		1/5
				Date
				2021/12/01

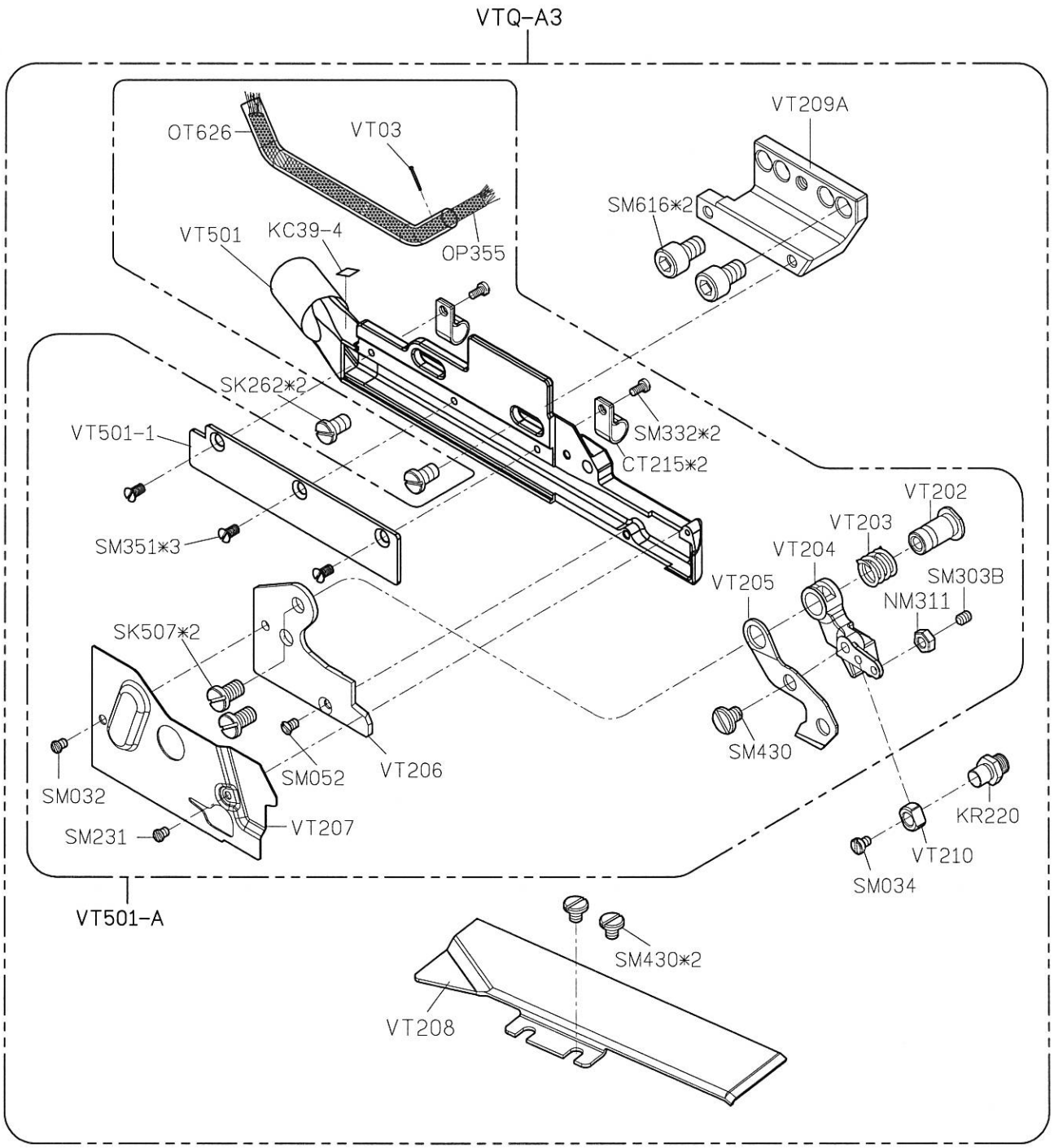

SIRUBA PARTS LIST	Series	Parts Group	Subclass / Remark	Page
	700L	VTE-L		2/5
				Date
				2022/12/19

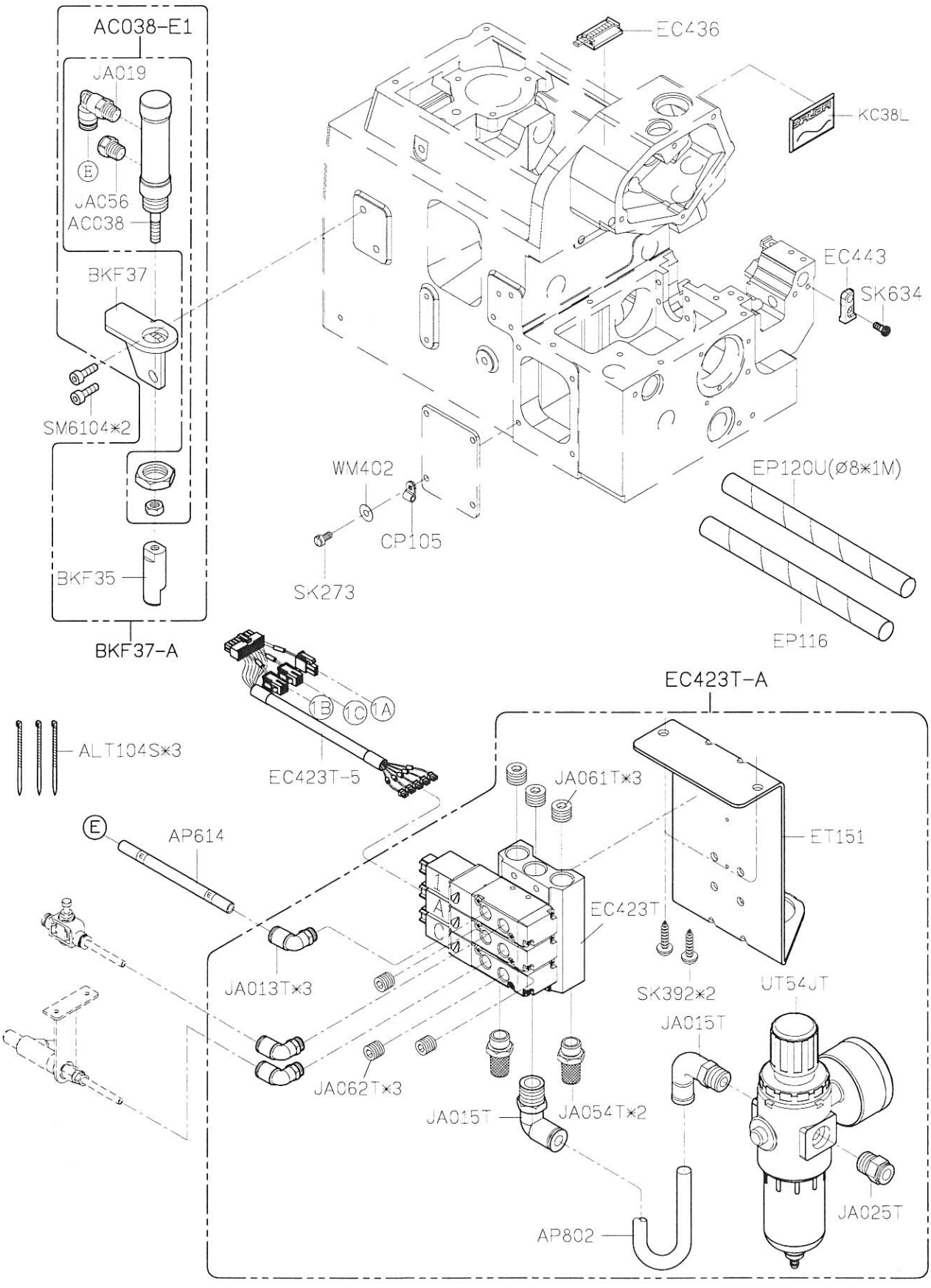

SIRUBA PARTS LIST	Series	Parts Group	Subclass / Remark	Page
	700L	VTE-L		3/5
				Date
				2021/12/01

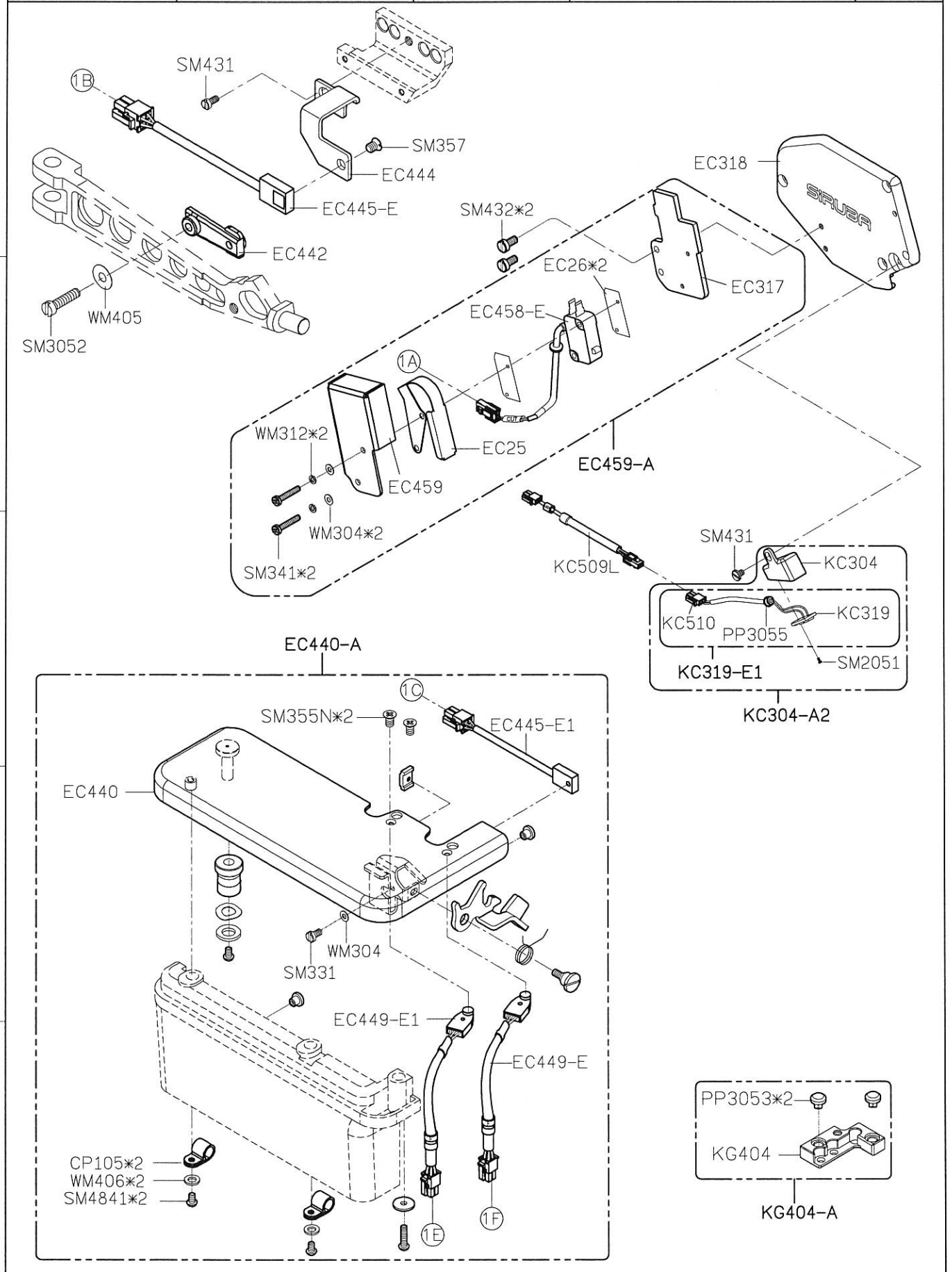

SiRUBA PARTS LIST	Series	Parts Group	Subclass / Remark	Page
	700L	VTE-L		4/5
				Date
				2021/12/01

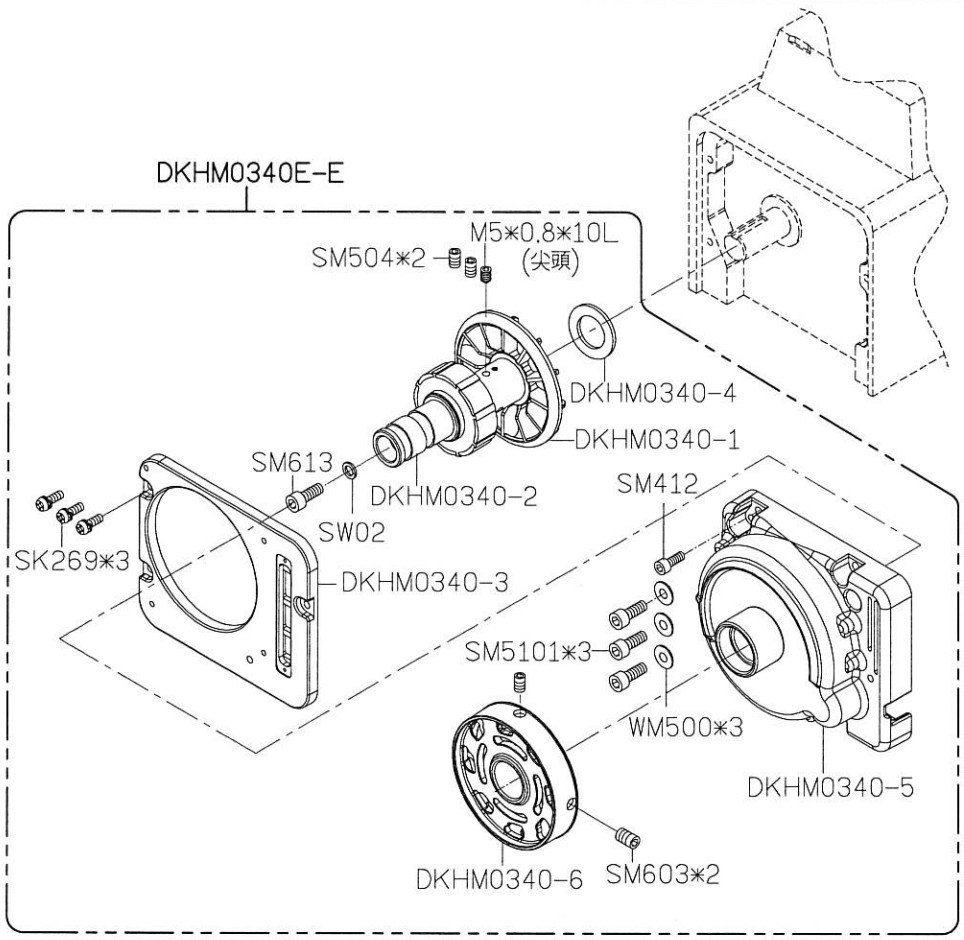

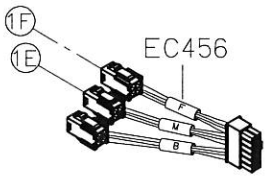

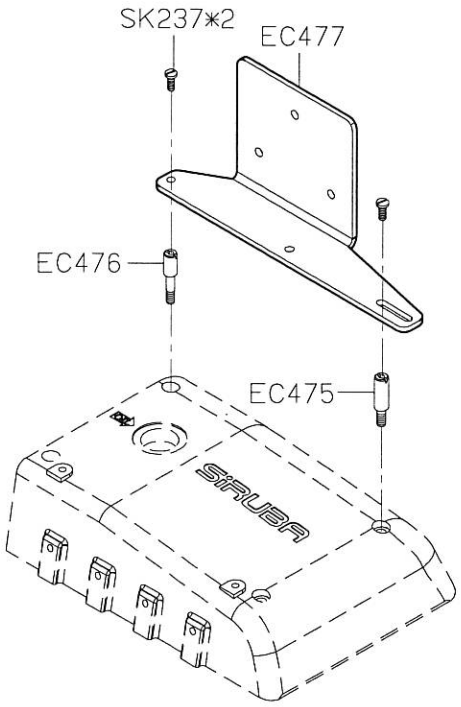

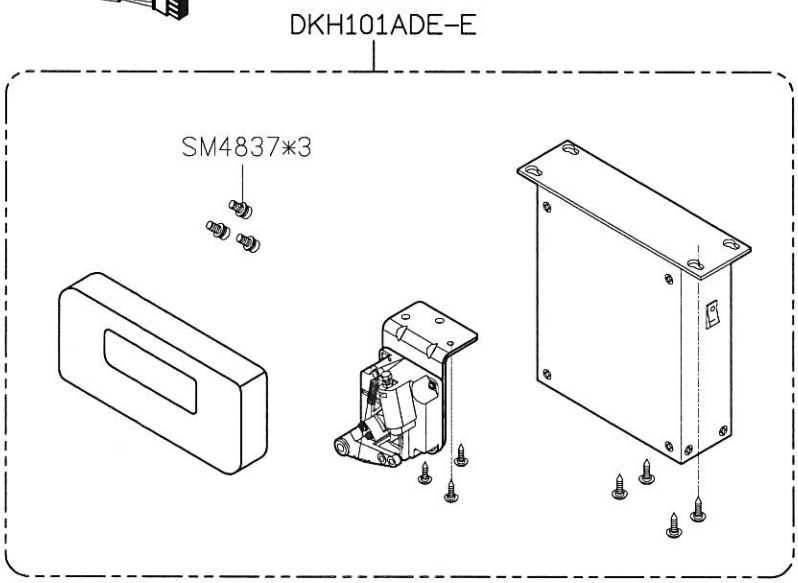

SIRUBA PARTS LIST	Series	Parts Group	Subclass / Remark	Page
	700L	VTE-L		5/5
				Date
				2021/12/01

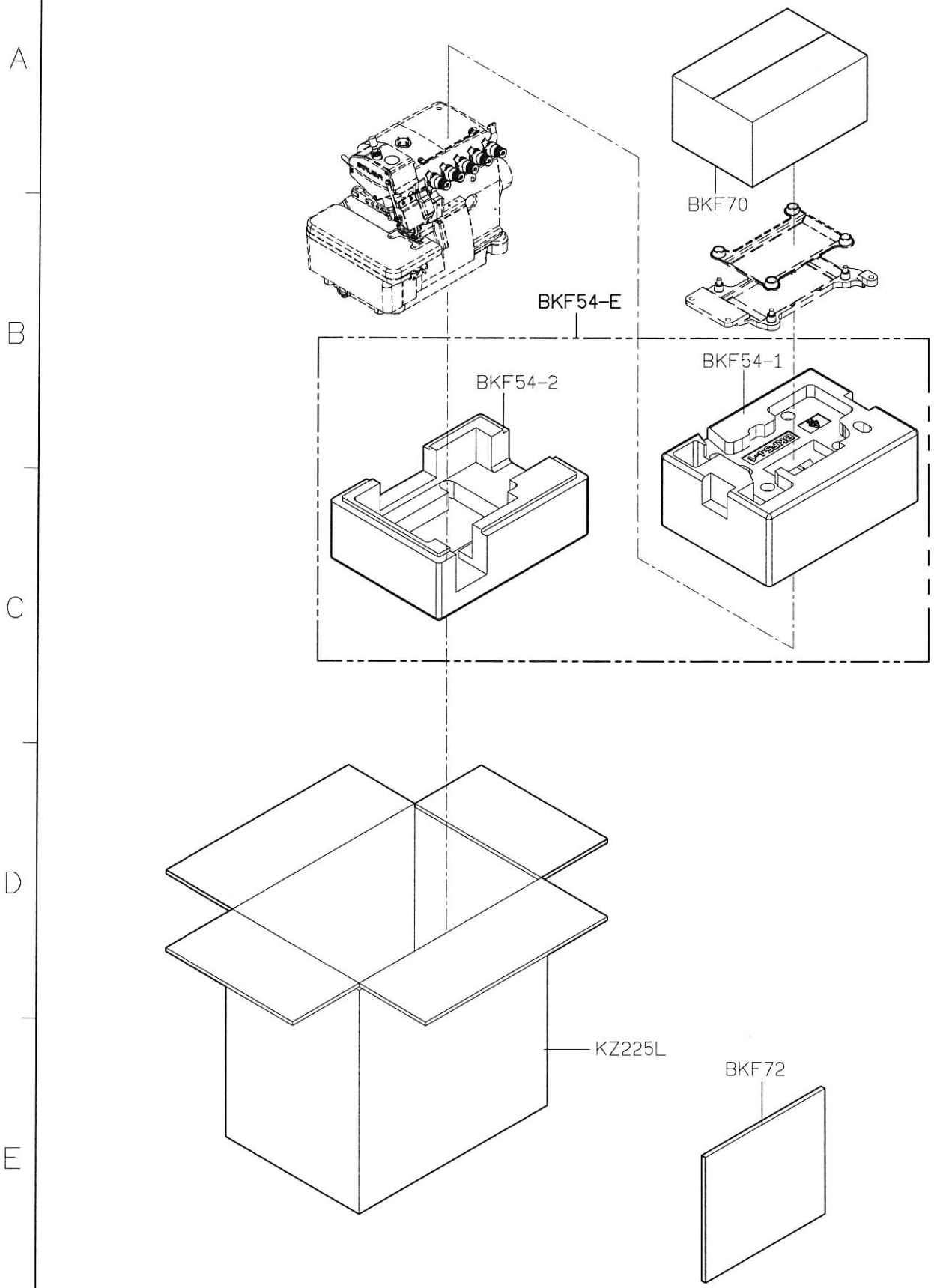

SIRUBA PARTS LIST	Series	Parts Group	Subclass / Remark	Page
	700K 700L	VTE-U		1/5
				Date
				2026/07/02

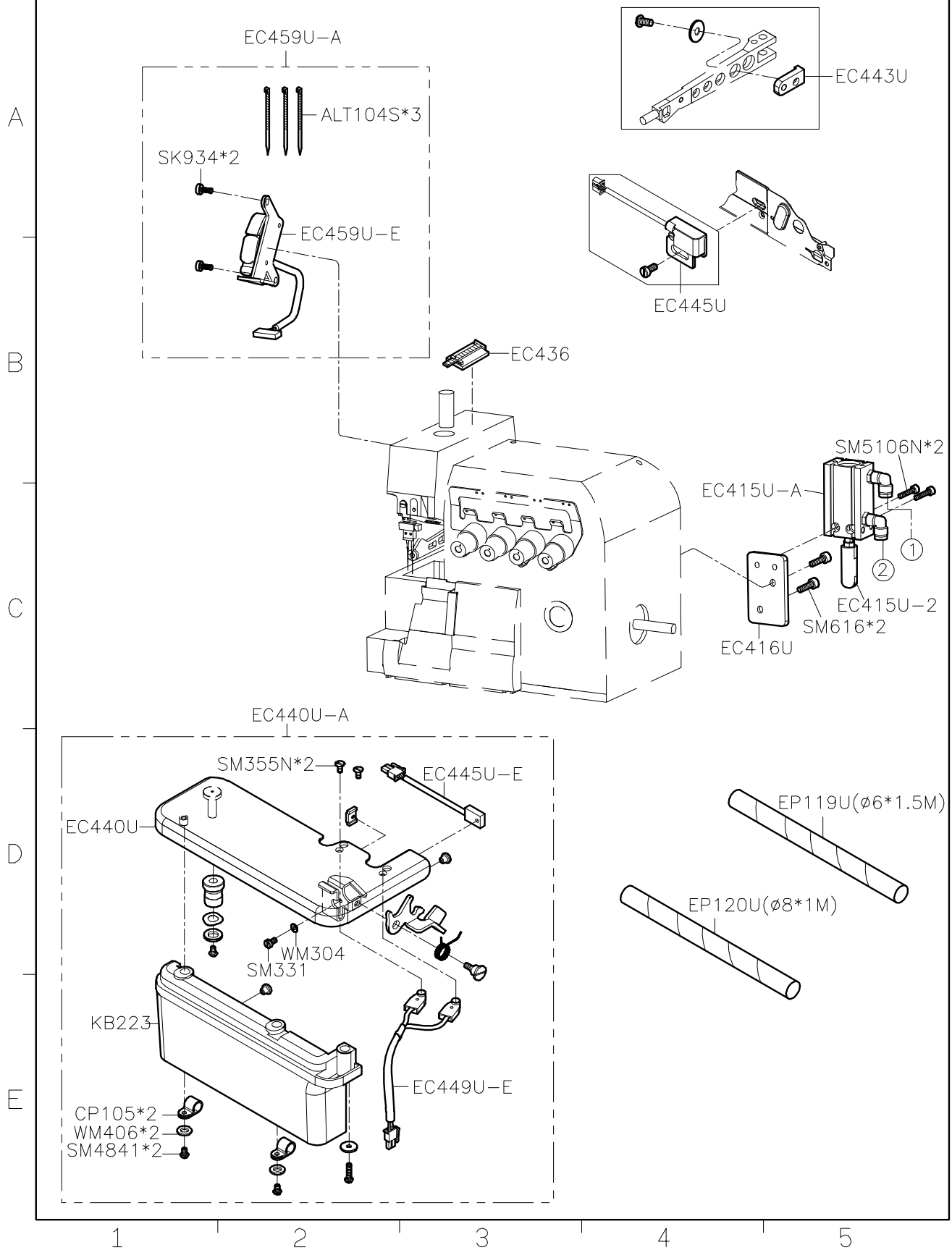

SIRUBA PARTS LIST	Series	Parts Group	Subclass / Remark	Page
	700K 700L	VTE-U		2/5
				Date
				2026/07/02

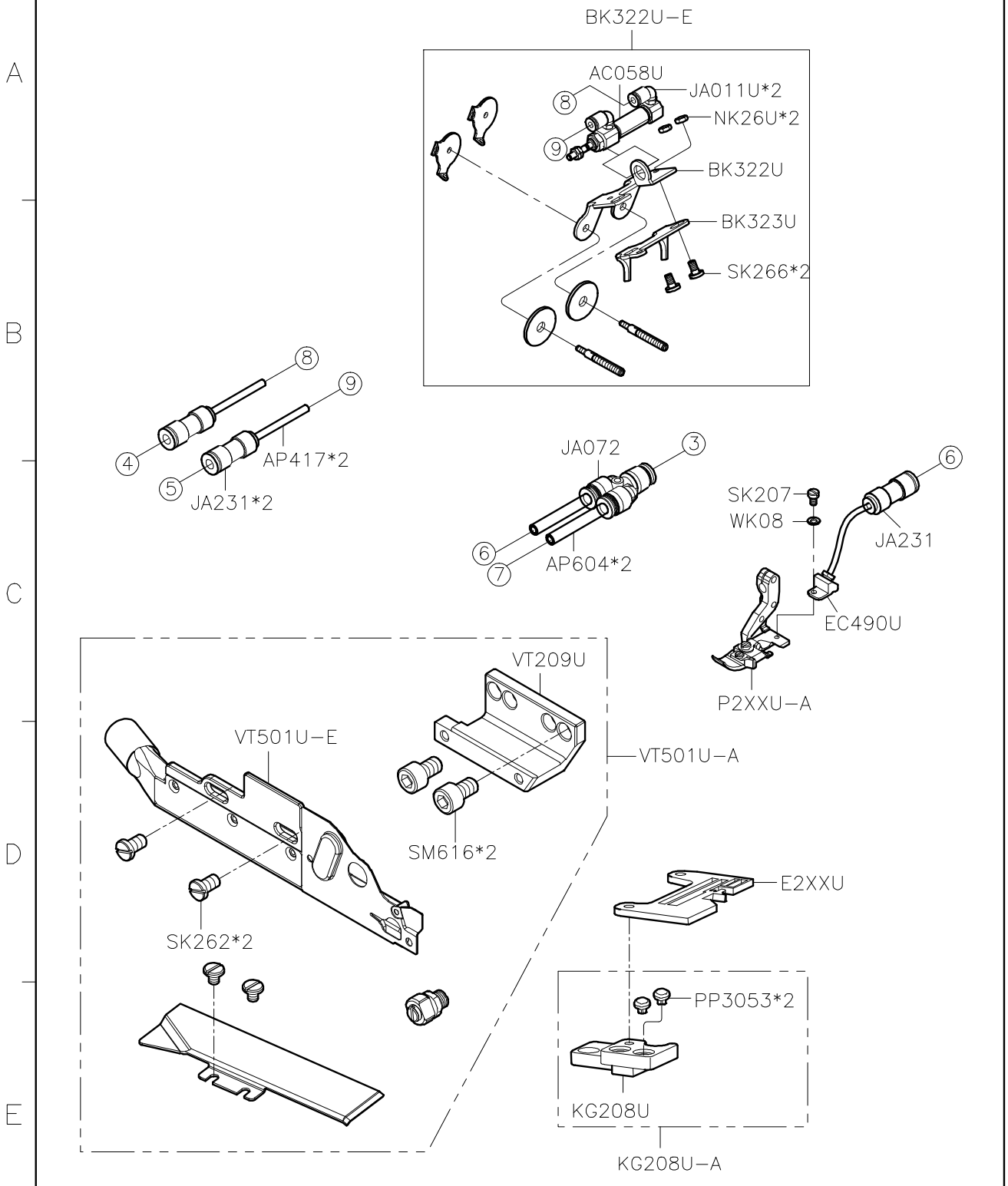

SiRUBA PARTS LIST	Series	Parts Group	Subclass / Remark	Page
	700K 700L	VTE-U	△FOR 700K用 *FOR 700L用	3/5
				Date
				2022/11/03

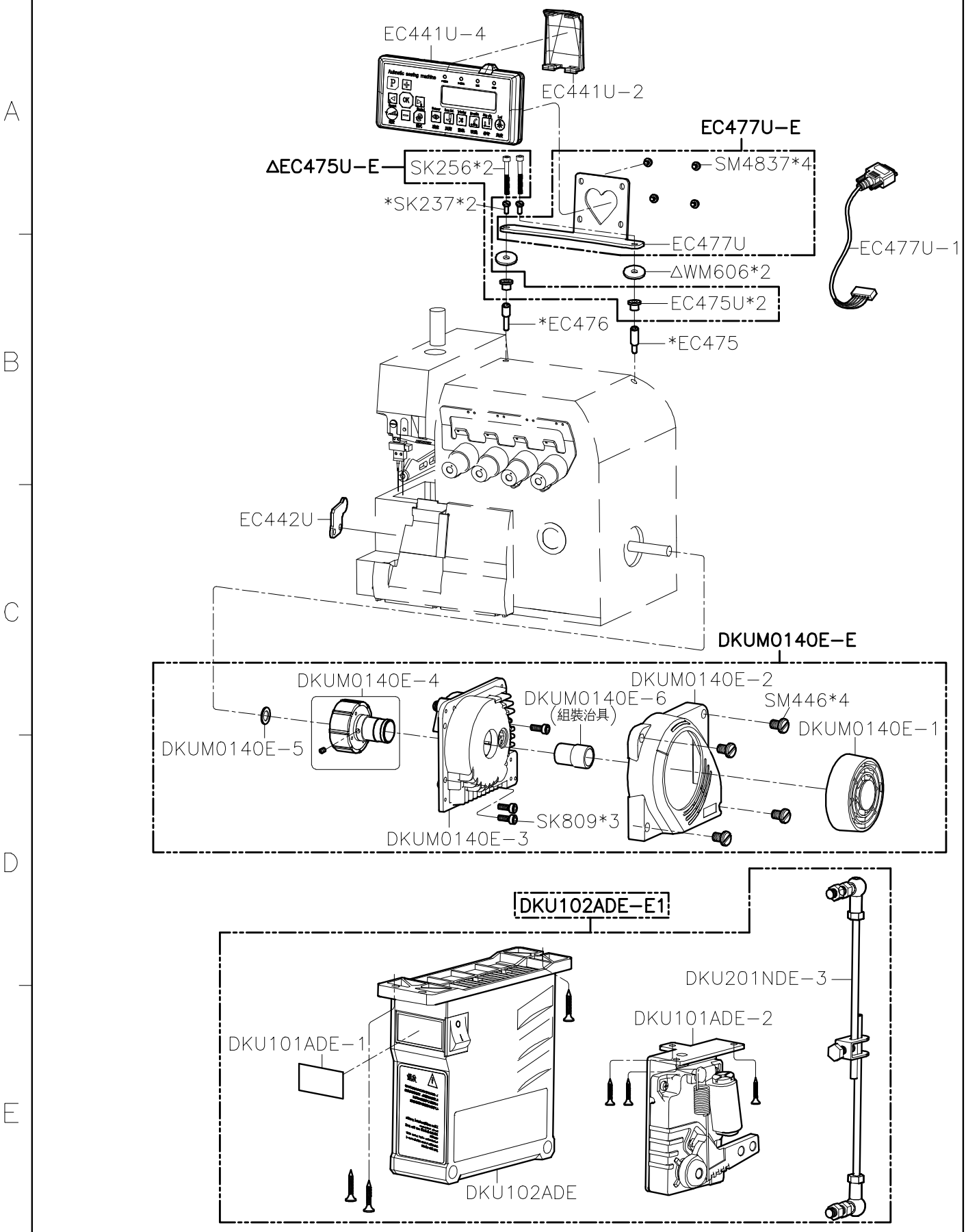

SiRUBA PARTS LIST	Series	Parts Group	Subclass / Remark	Page
	700K 700L	VTE-U		4/5
				Date
				2026/07/02

TUC-01

TUC029-A

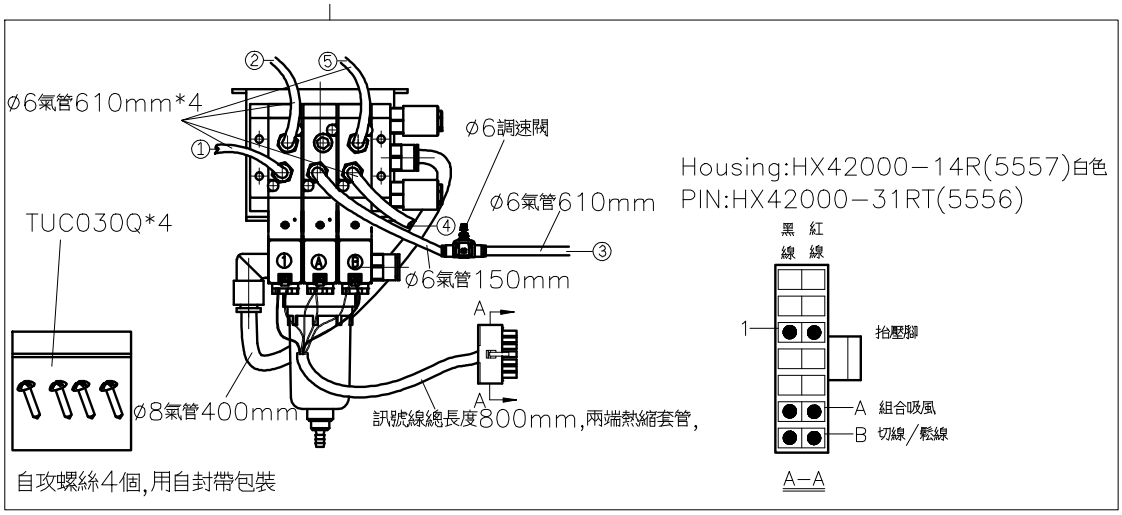

TZ-XF-4012

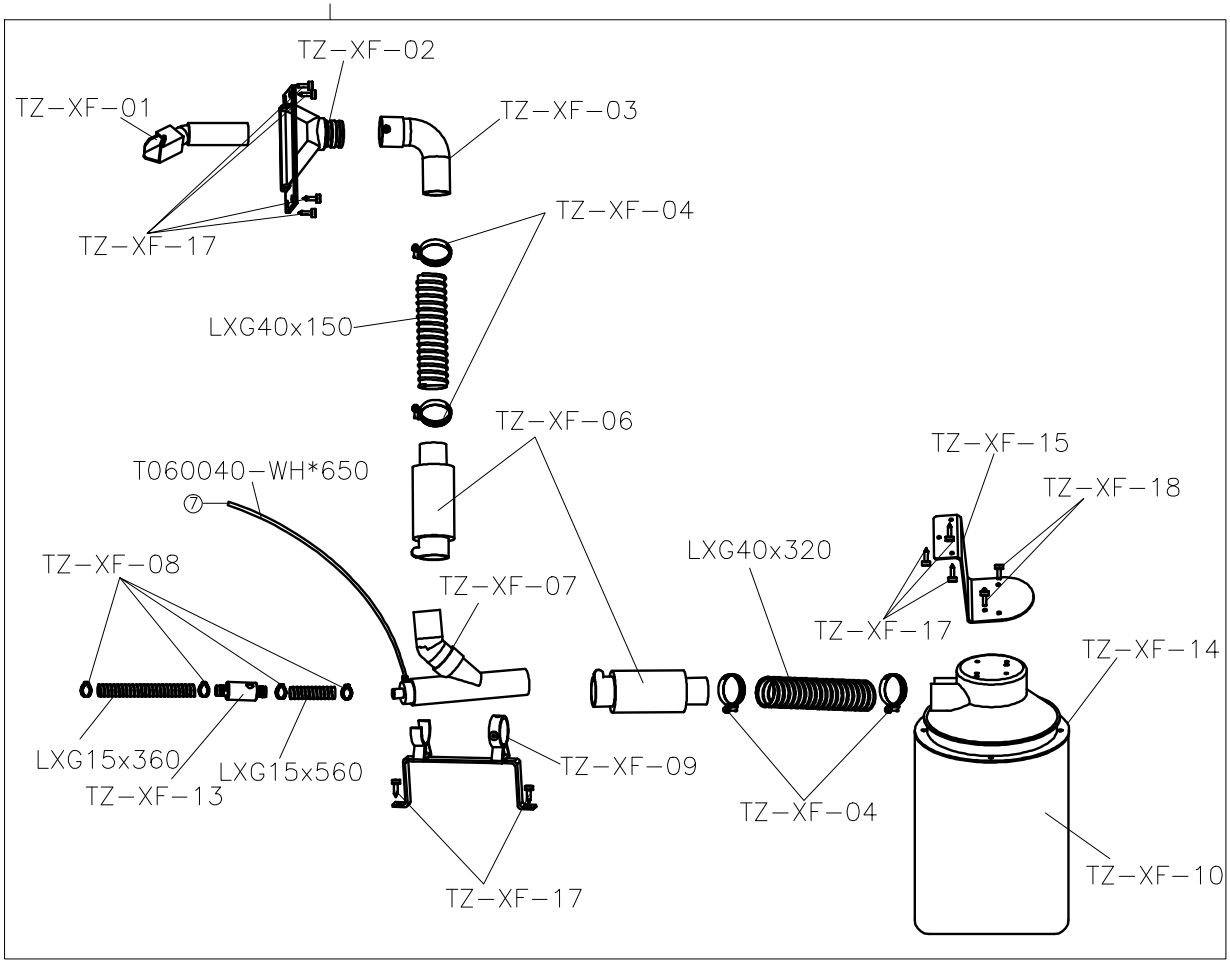

SIRUBA PARTS LIST	Series	Parts Group	Subclass / Remark	Page
	700K 700L	VTE-U		5/5
				Date
				2020/03/30

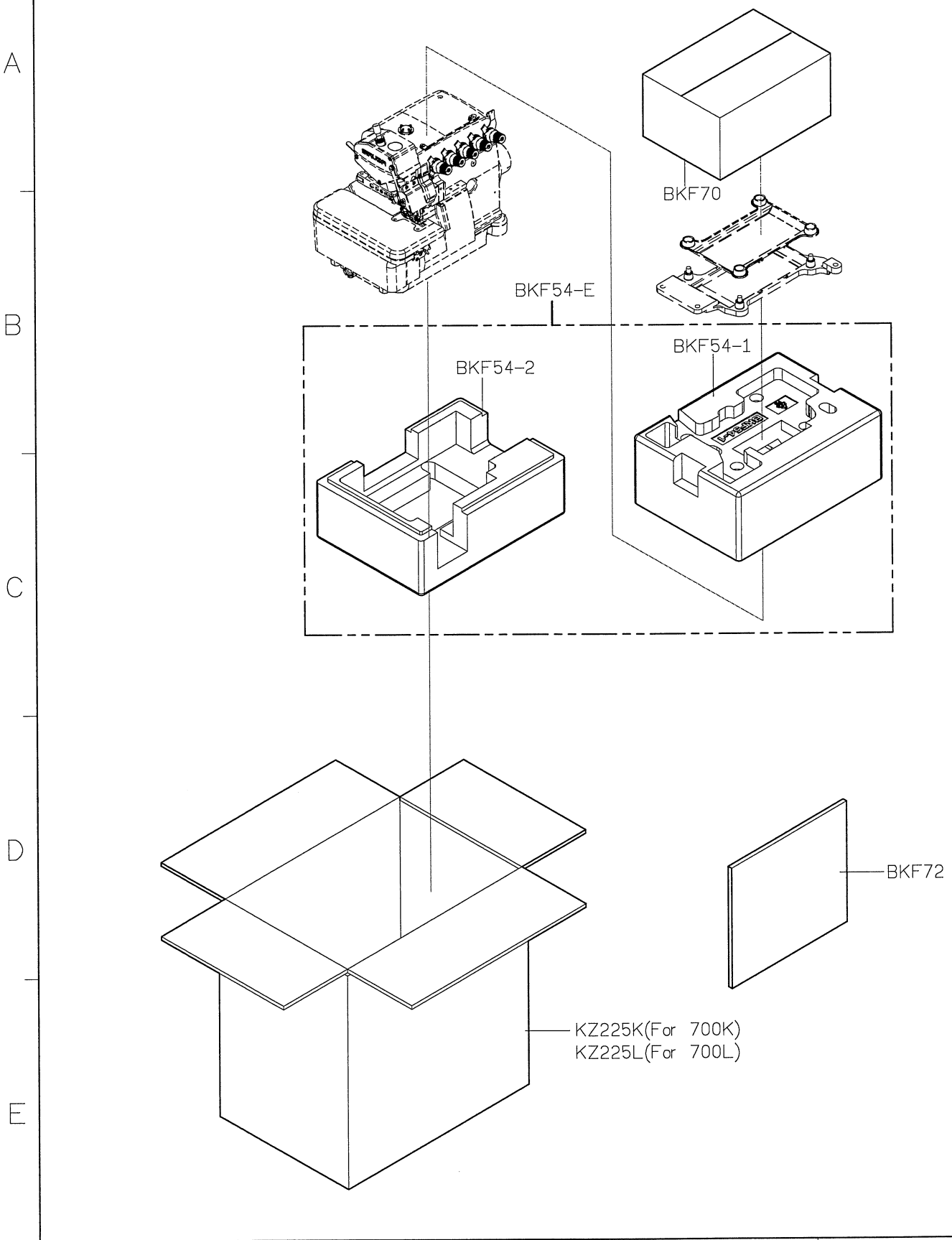

SIRUBA PARTS LIST	Series	Parts Group	Subclass / Remark	Page
	700L	WR-K1		1/1
				Date
				2016/06/25

