SIRUBA PARTS LIST	Series	Parts Group	Subclass / Remark	Page
	VC008B	VAD		1/1
				Date
				2020/09/23

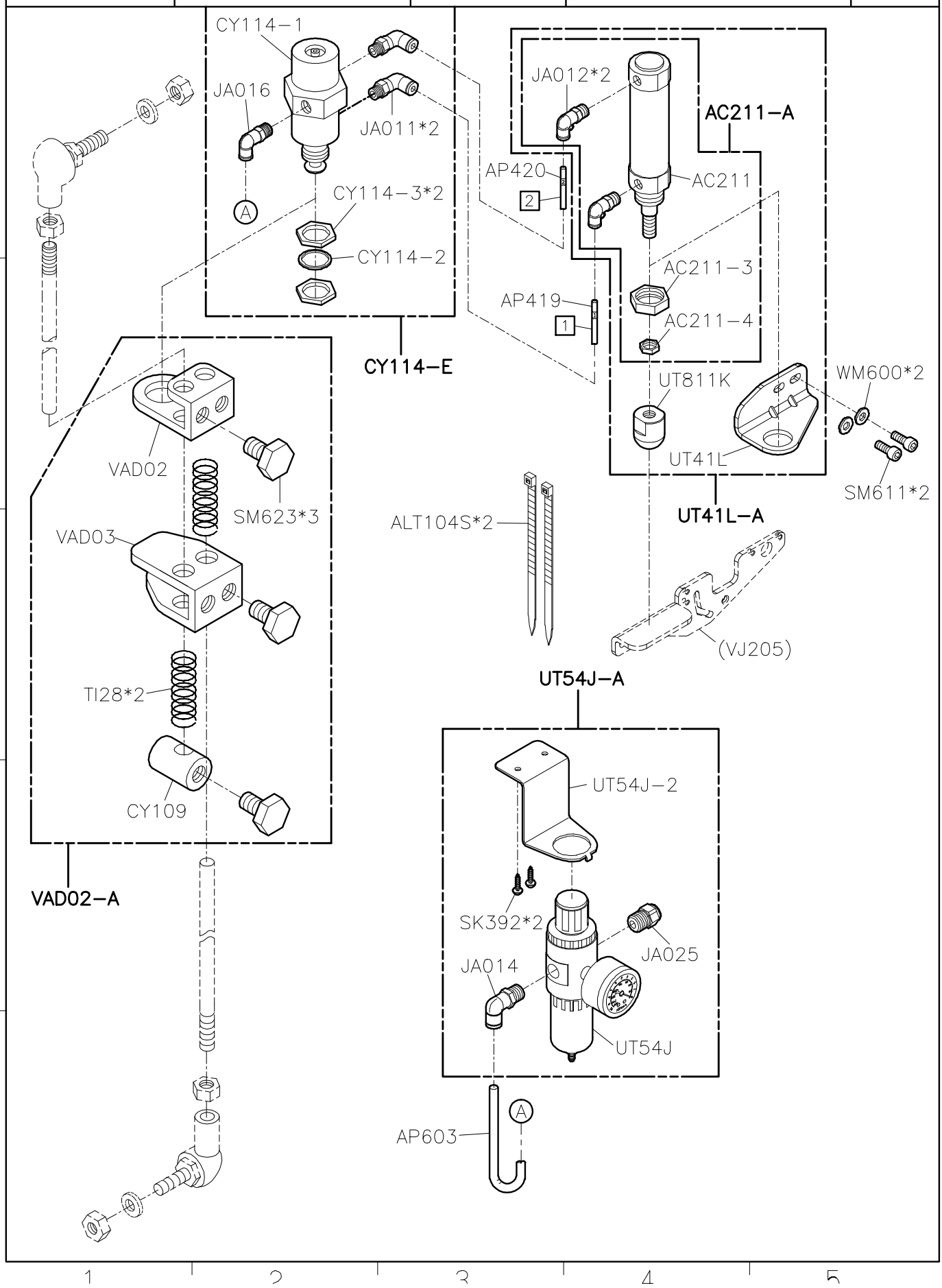

SiRUBA PARTS LIST	Series	Parts Group	Subclass / Remark	Page
	VC008B	VAR		1/1
				Date
				2023/12/05

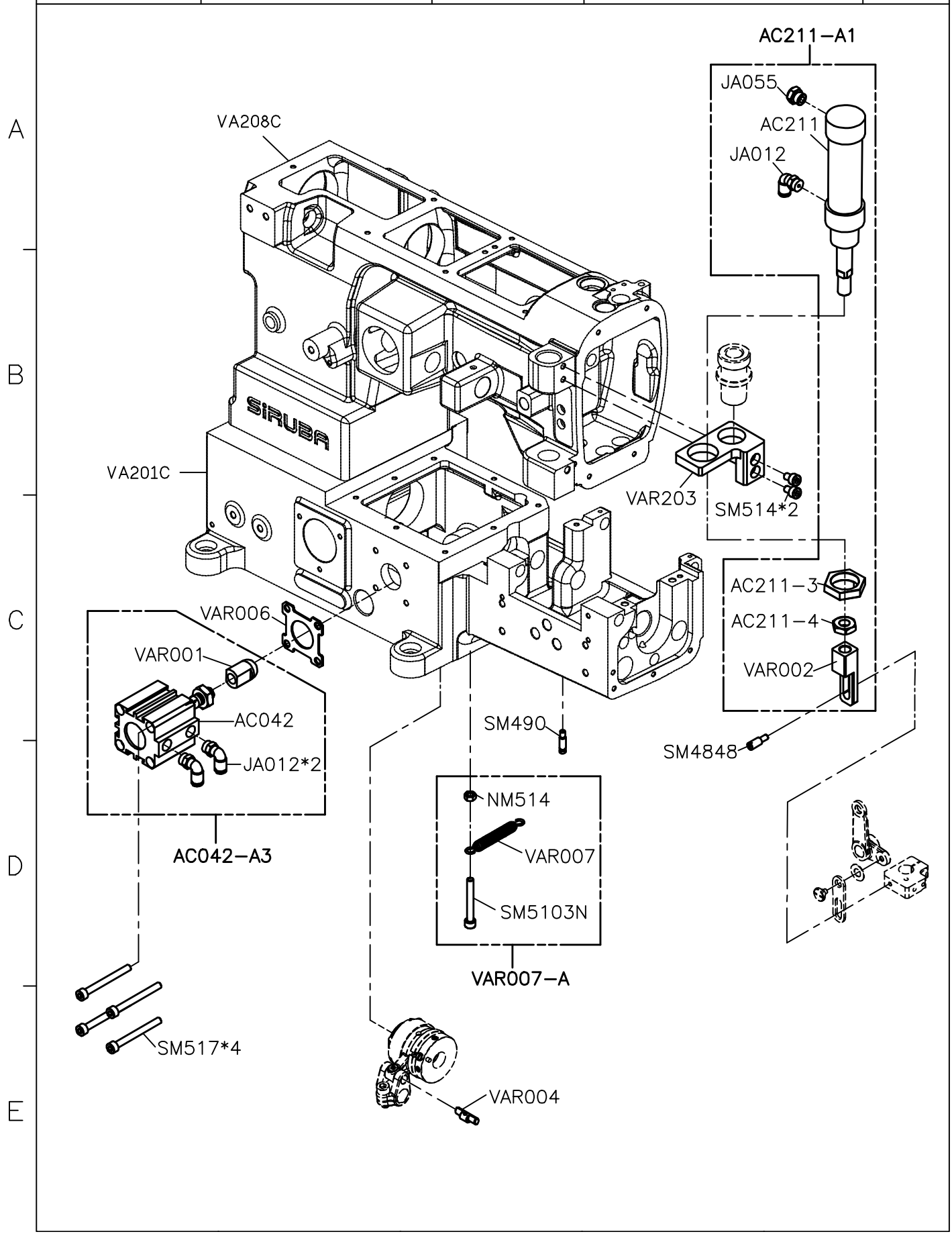

SiRUBA PARTS LIST	Series	Parts Group	Subclass / Remark	Page
	VC008B	VCE		1/1
				Date
				2021/02/22

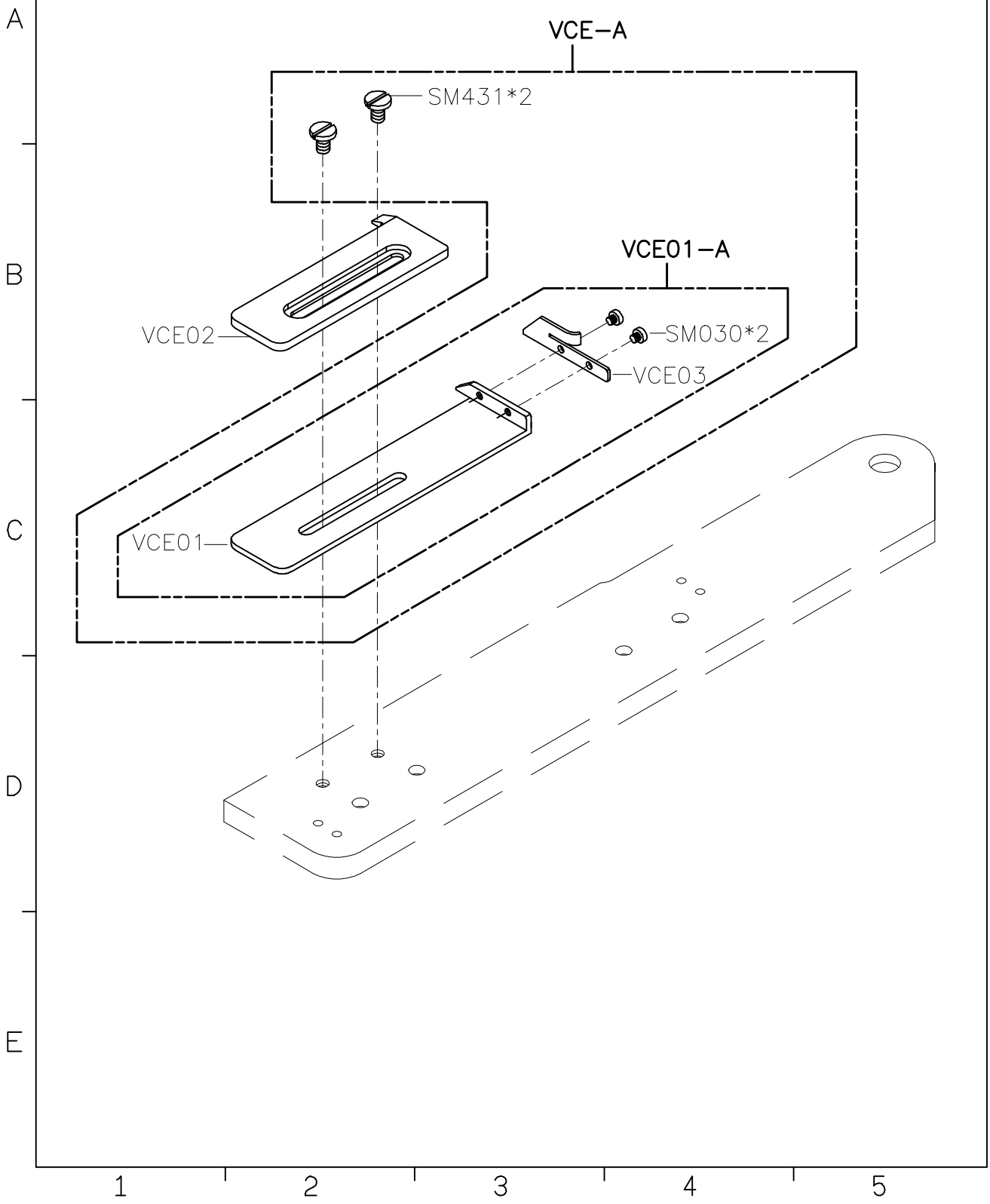

SIRUBA PARTS LIST	Series	Parts Group	Subclass / Remark	Page
	VC008B	VCL	△ CL02，BR4243需再和 CL701－E選配	1/3
				Date
				2019/12/09

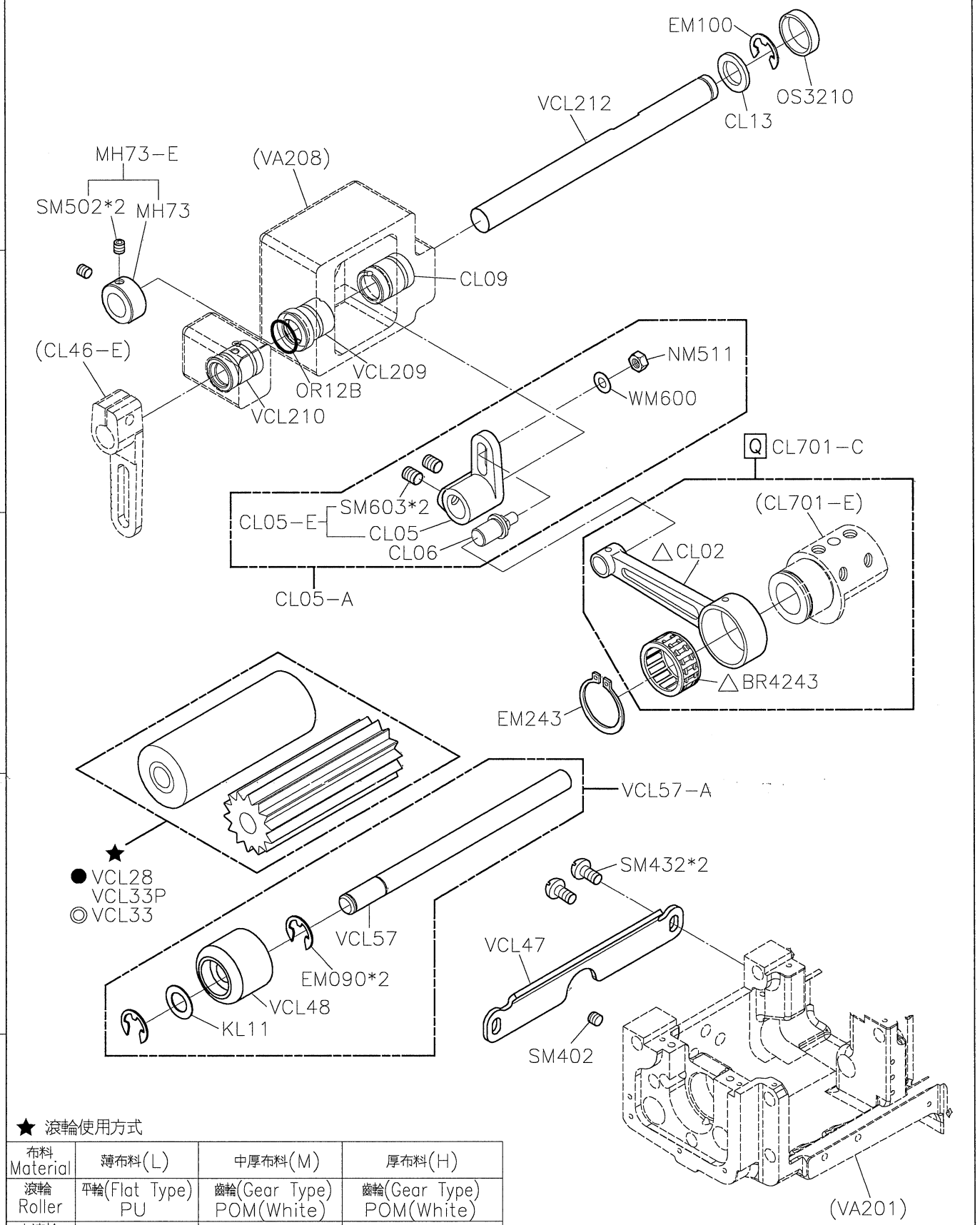

★ 滾輪使用方式

布料 Material	薄布料(L)	中厚布料(M)	厚布料(H)
滾輪 Roller	平輪(Flat Type) PU	齒輪(Gear Type) POM(White)	齒輪(Gear Type) POM(White)
上滾輪 Upper	● VCL16P	VCL37P(27T)	◎ VCL08P(22T)
下滾輪 Bottom	● VCL28	VCL33P(16T)	◎ VCL33(14T)

SIRUBA PARTS LIST	Series	Parts Group	Subclass / Remark	Page
	VC008B	VCL	*For VAR	2/3
				Date 2023/04/20

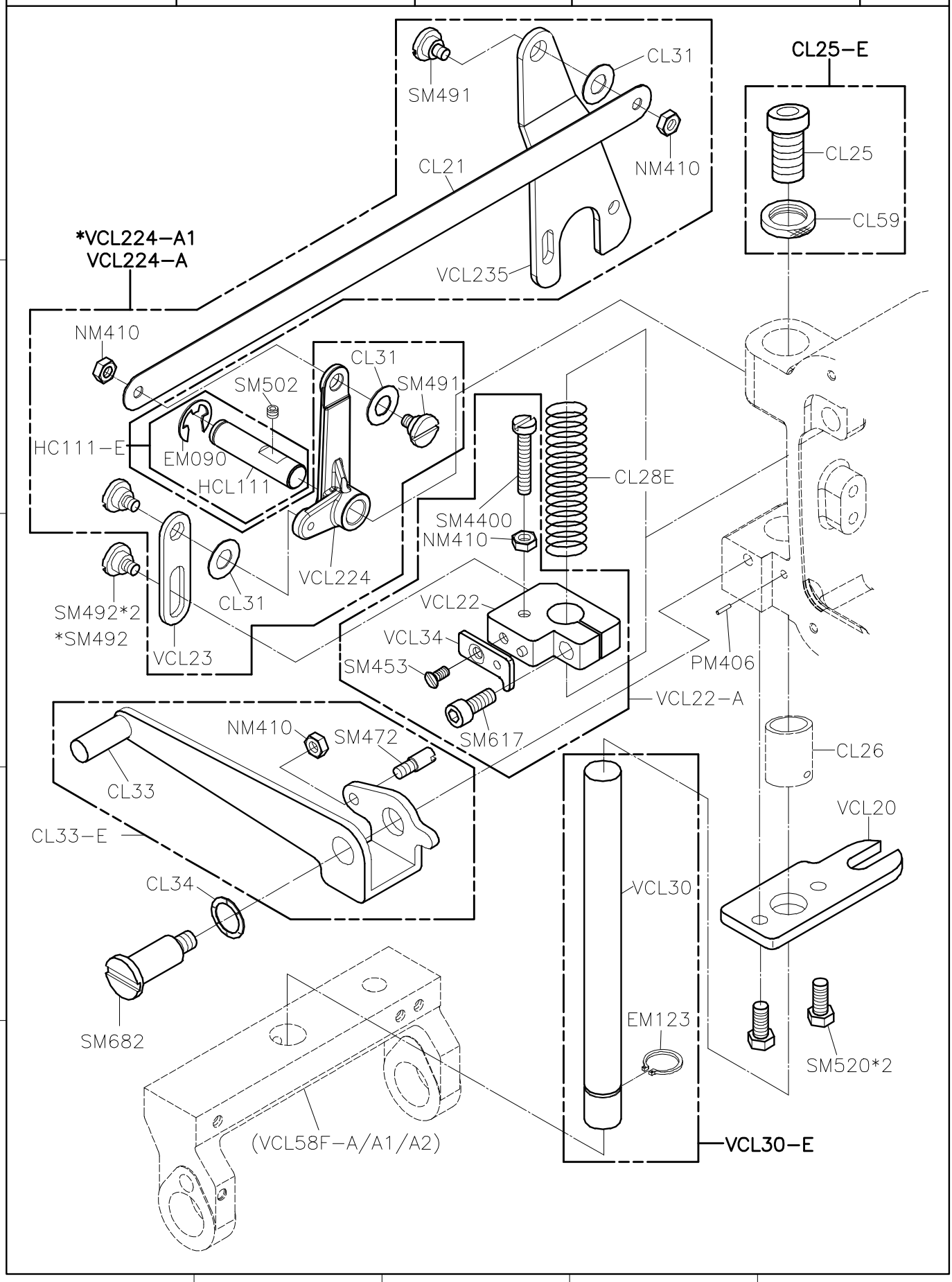

SIRUBA PARTS LIST	Series	Parts Group	Subclass / Remark	Page
	VC008B	VCL		3/3
				Date
				2023/4/20

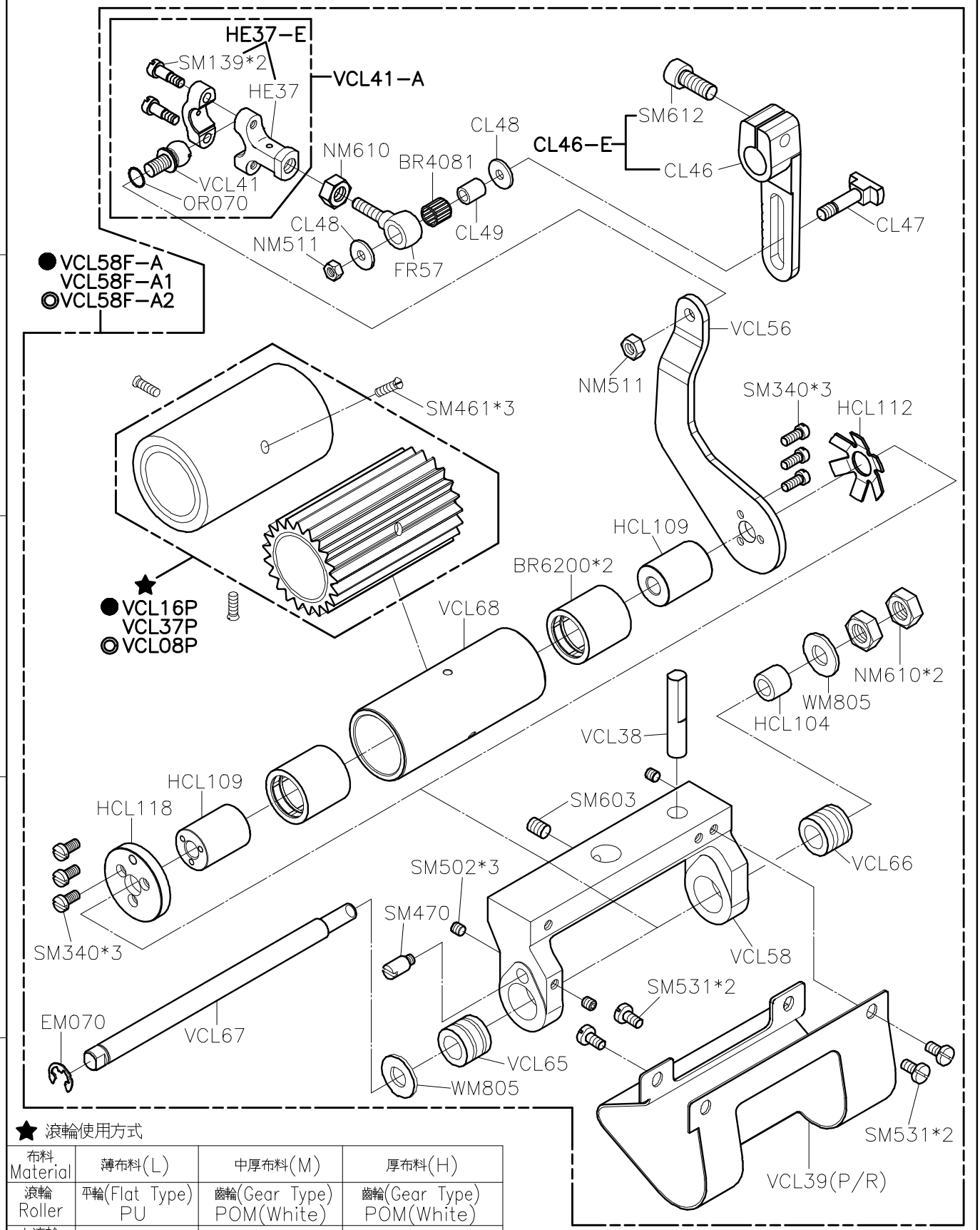

★ 滾輪使用方式

布料 Material	薄布料(L)	中厚布料(M)	厚布料(H)
滾輪 Roller	平輪(Flat Type) PU	齒輪(Gear Type) POM(White)	齒輪(Gear Type) POM(White)
上滾輪 Upper	●VCL16P	VCL37P(27T)	◎VCL08P(22T)
下滾輪 Bottom	●VCL28	VCL33P(16T)	◎VCL33(14T)

SIRUBA PARTS LIST	Series	Parts Group	Subclass / Remark	Page
	VC008B	VPL-B		1/1
				Date
				2023/06/05

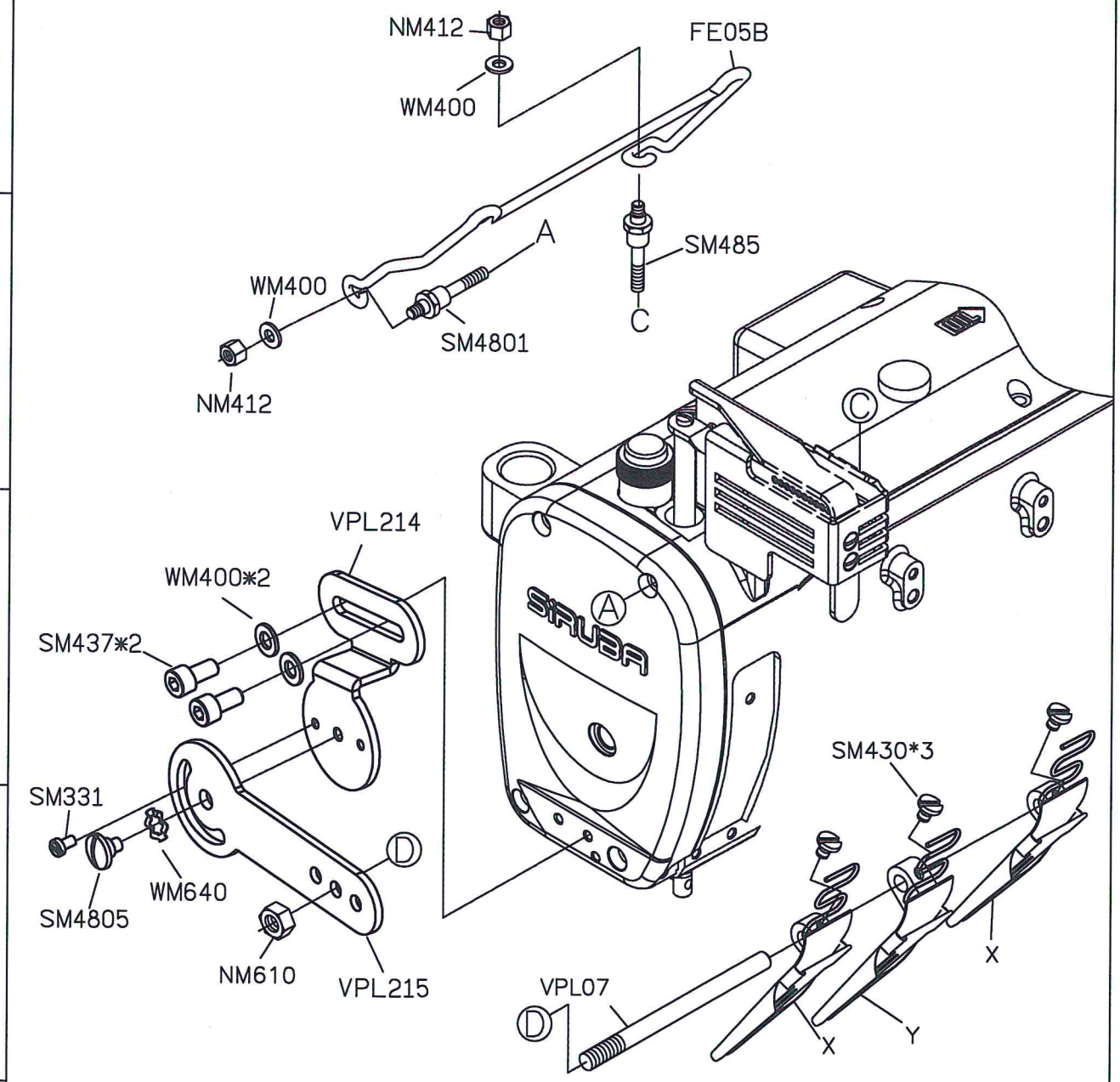

機型	完成尺寸	X	Y	針寛	壓具
VC008B-06048	8	B418P	B418AP	3/16"	P9412DA
	9	B418Q	B418AQ		P9412D
VC008B-06064	10	B418R	B418AR	1/4"	P9512DA
	12	B418S	B418AS		P9512D
	16	B418U	B418AU	1/2"	P9512B

P9412D,P9412DA(3/16")
P9512D,P9512DA (1/4")
P9512B (1/2")

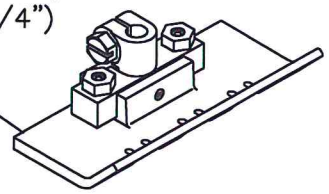

SiRUBA PARTS LIST	Series	Parts Group	Subclass / Remark	Page
	VC008A/B	VUT	● FOR 4 NEEDLE	1/6
				Date
				2023/04/10

QX-VUT

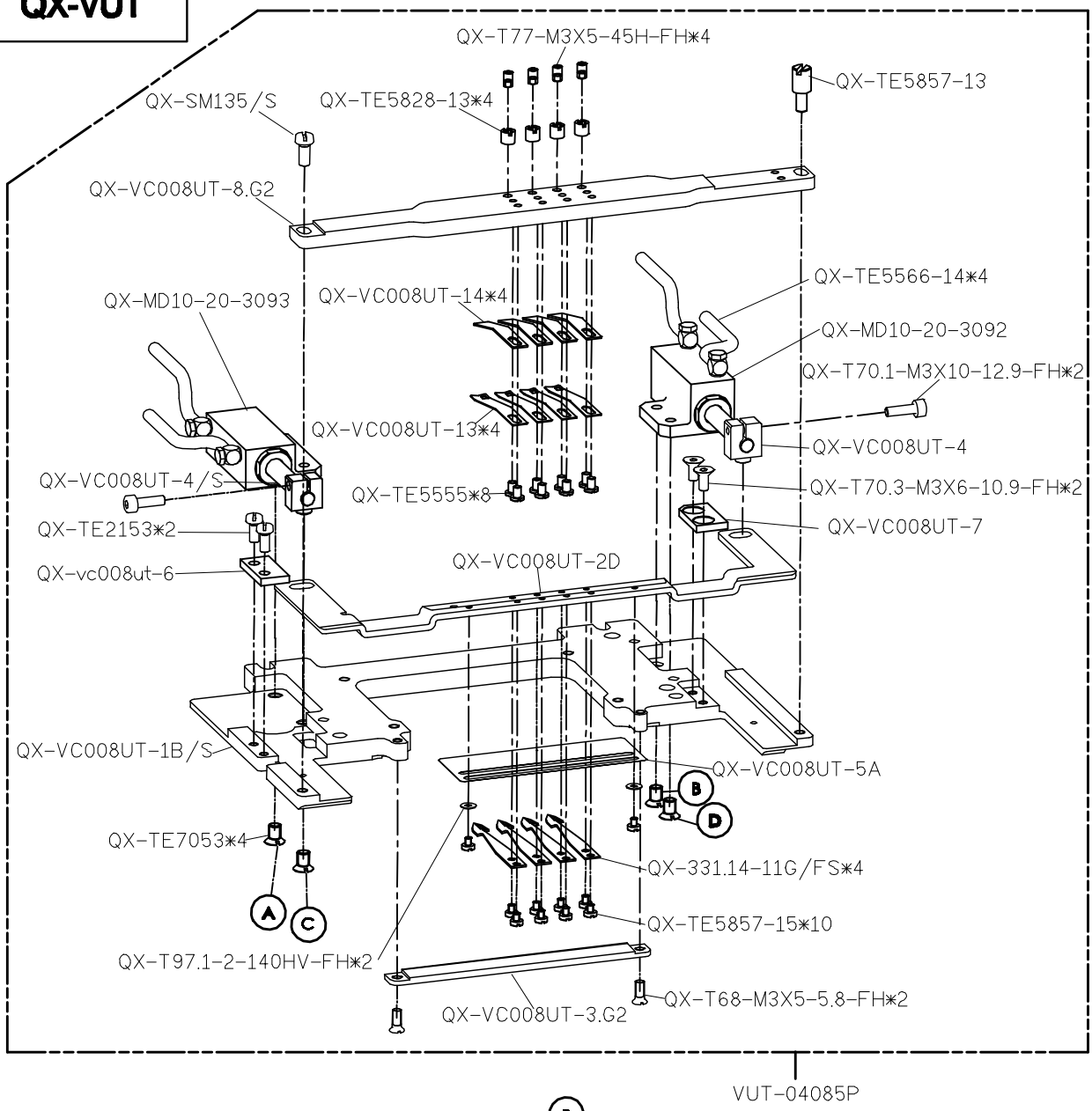

VUT-04085P

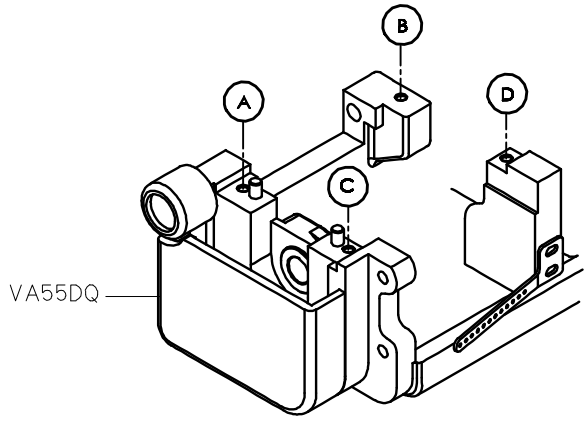

SiRUBA PARTS LIST	Series	Parts Group	Subclass / Remark	Page
	VC008A/B	VUT	● FOR 12 NEEDLE	2/6
				Date
				2023/04/10
QX-VUT				

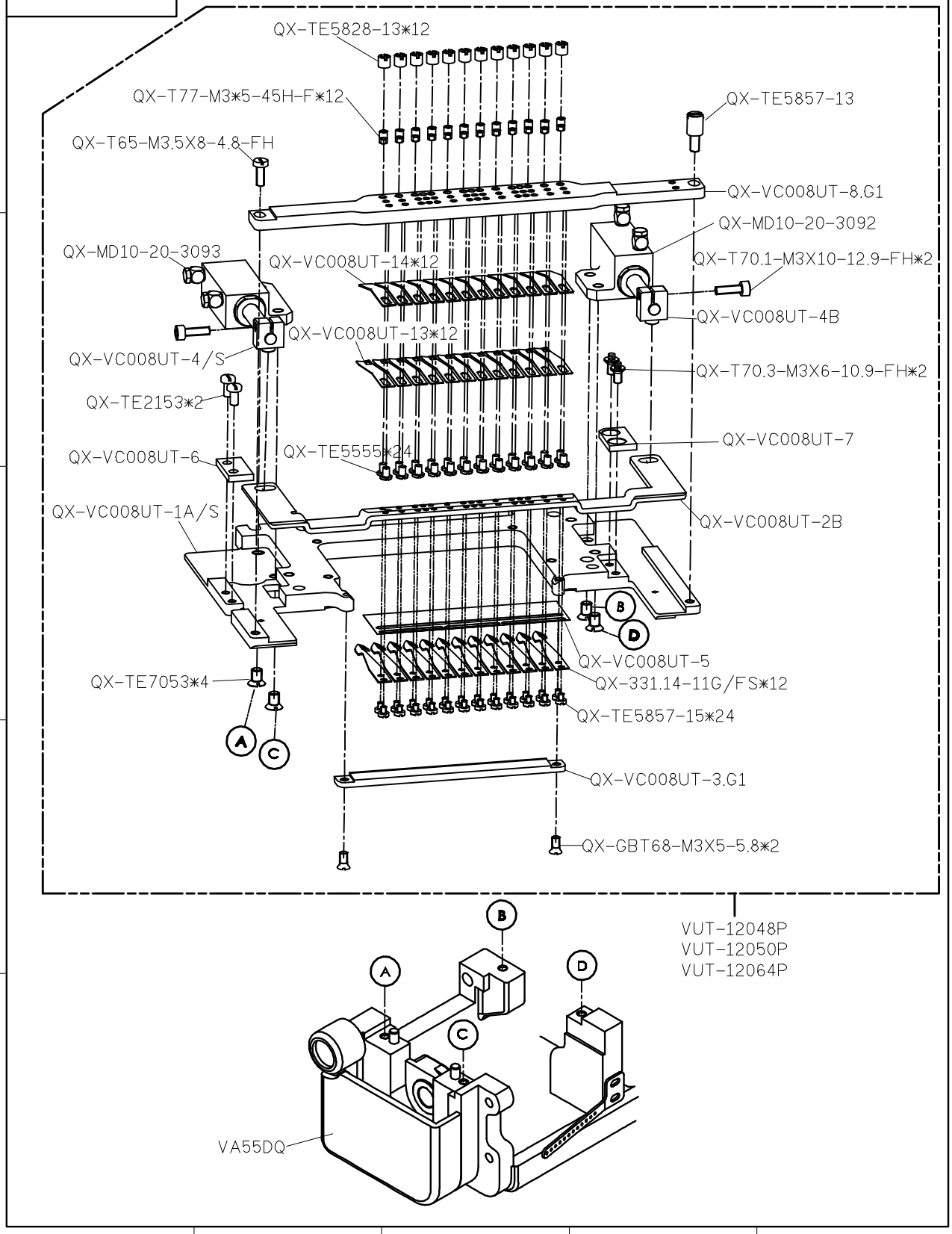

SIRUBA PARTS LIST	Series	Parts Group	Subclass / Remark	Page
	VC008A/B	VUT	●FOR 4/12 NEEDLE	3/6
				Date
				2023/03/21

QX-VUT

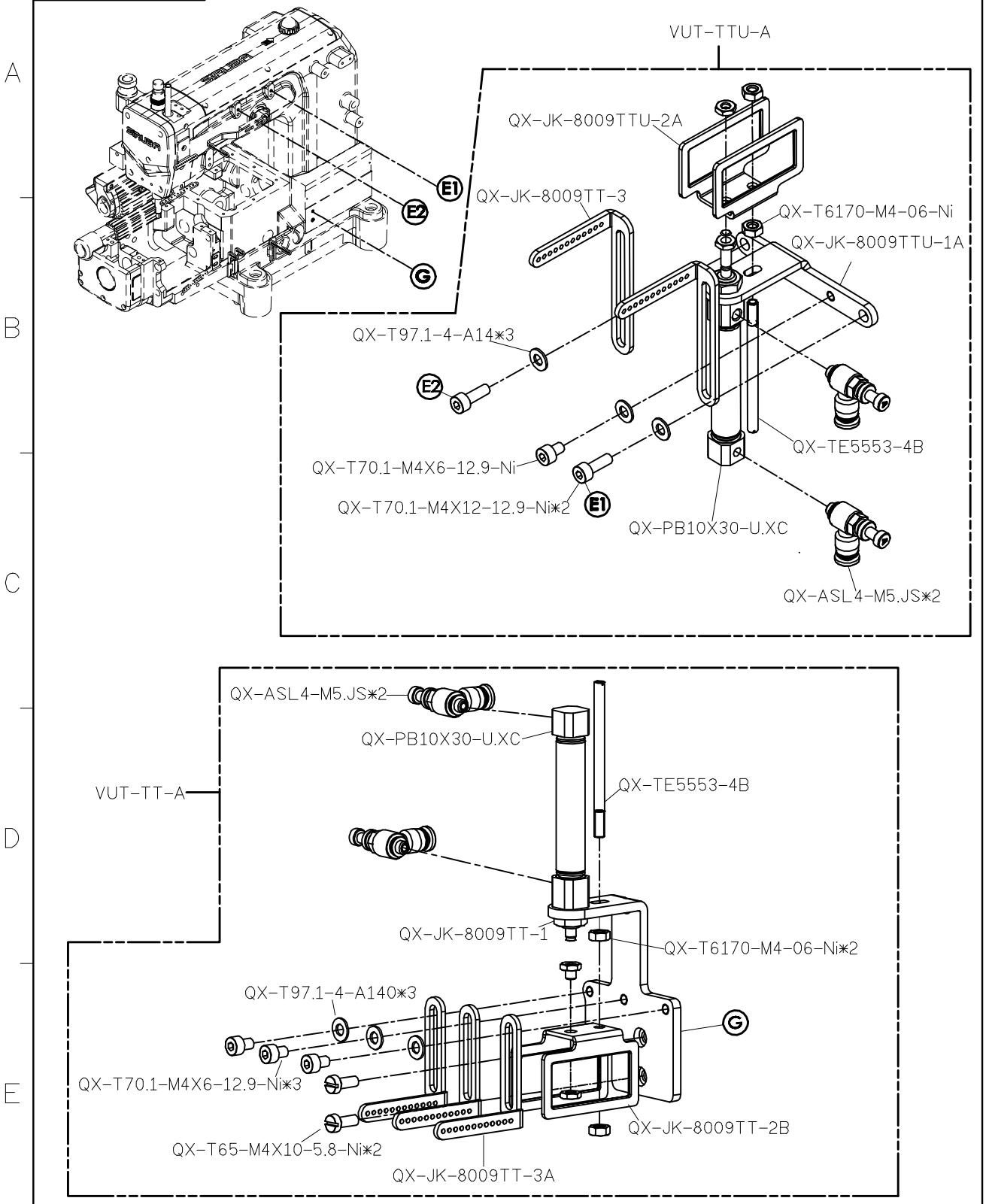

SiRUBA PARTS LIST	Series	Parts Group	Subclass / Remark	Page
	VC008A/B	VUT	● FOR 4/12 NEEDLE	4/6
				Date
				2023/03/21

QX-VUT

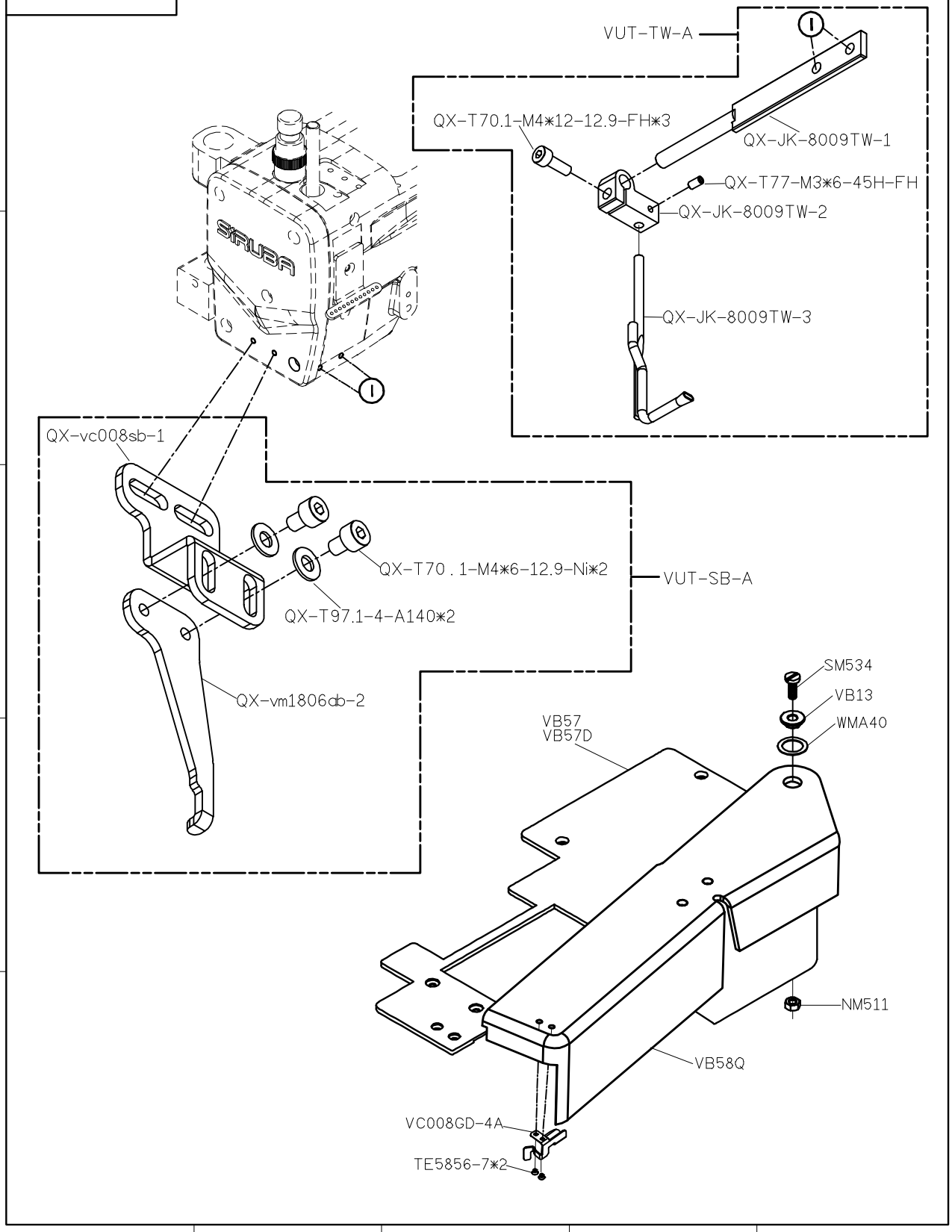

SiRUBA PARTS LIST	Series	Parts Group	Subclass / Remark	Page
	VC008A	VUT	● FOR 4/12 NEEDLE	5/6
				Date
				2023/03/21

QX-VUT

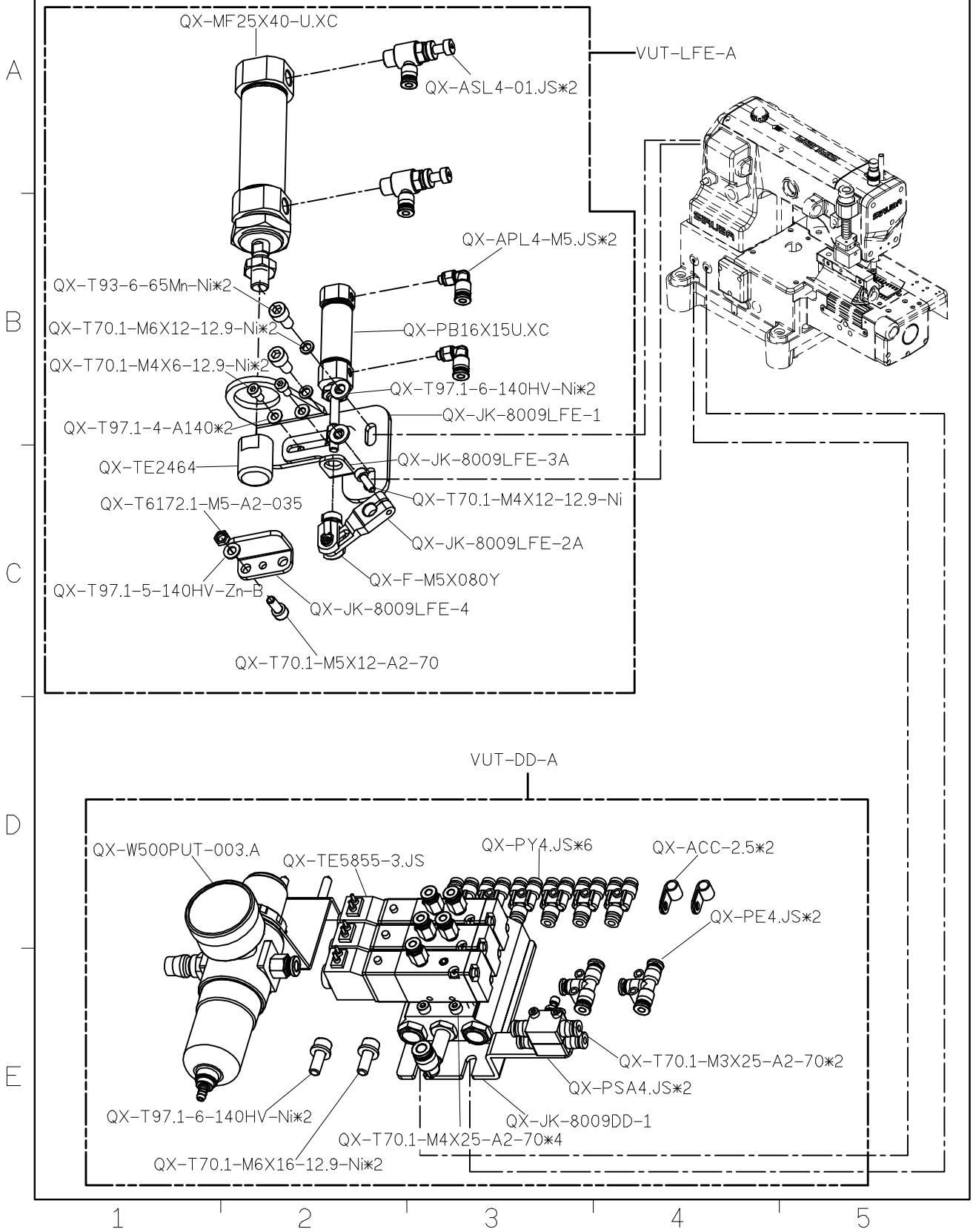

SiRUBA PARTS LIST	Series	Parts Group	Subclass / Remark	Page
	VC008A/B	VUT	● FOR VAR	8/8
				Date
				2023/11/24
QX-VUT				
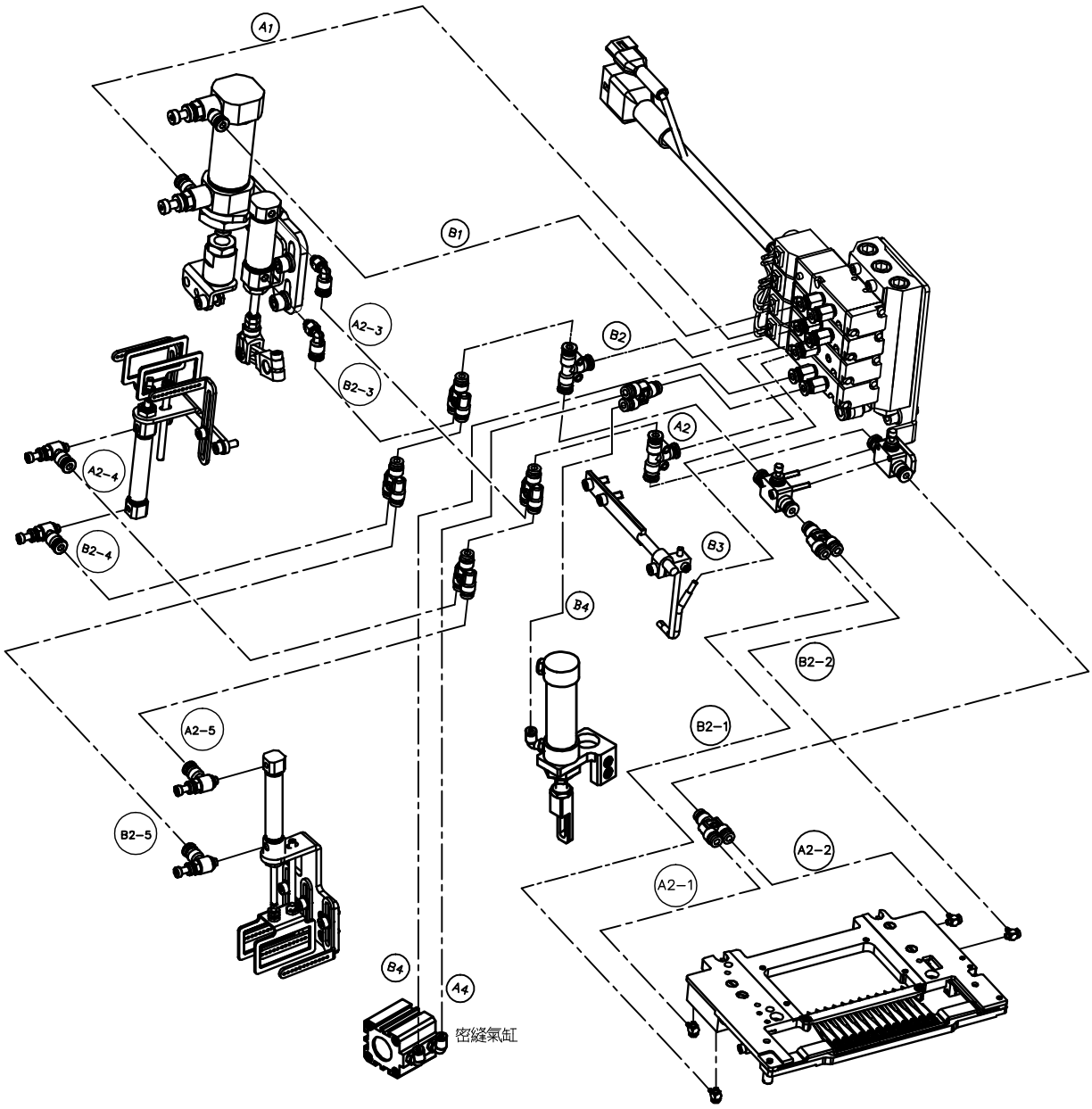
A1	B1	→	抬壓腳
A2	B2	→	鬆線/剪線
	B3	→	吹氣
A4	B4	→	密縫