SiRUBA GAGE PARTS LIST	Series	Remark	Page	Date
	U007		1 / 1	2023/11/22

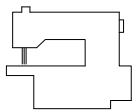	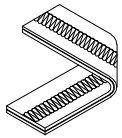	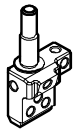	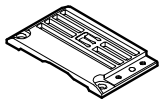	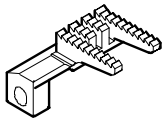	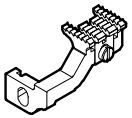	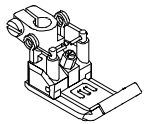		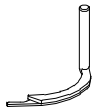	
MODEL	SUB-CLASS	NEEDLE CLAMP	NEEDLE PLATE	MAIN FEED DOG	DIFF. FEED DOG	PRESSER FOOT	LOOPER	LOOPER	NEEDLE
機 型	規 格	針 座	針 板	主送具	差送具	押具	勾針	上叉	針 號
W122/UCH-3M	240 248 356 364	M5240 M5248 M5356 M5364	E3994LM E3995LM E3996LM E3997LM	D4325LA D4325LA D4325LA D4325LA	H4308LB H4308LB H4308LB H4308LB	P2674K-A P2674K-A P2576K-A P2576K-A	MT01	MH41	UYX128GAS#10
W122/UCH-3M /UTT(UTU)	240 248 356 364	M5240 M5248 M5356 M5364	E3994LM E3995LM E3996LM E3997LM	D4325LA D4325LA D4325LA D4325LA	H4308LB H4308LB H4308LB H4308LB	P2674K-A P2674K-A P2576K-A P2576K-A	MT01	MH41	UYX128GAS#10
W122/UCH-3M /UTX(UTY)	240 248 356 364	M5240 M5248 M5356 M5364	E3994LM E3995LM E3996LM E3997LM	D4325LA D4325LA D4325LA D4325LA	H4308LB H4308LB H4308LB H4308LB	P2674K-A P2674K-A P2576K-A P2576K-A	MT01	MH41	UYX128GAS#10

SIRUBA PARTS LIST	Series	Parts Group	Subclass / Remark	Page
	C007K/C007L C007KP/F007K S007K/U007	KW		1/1
				Date
				2020/8/18

KW01E-A

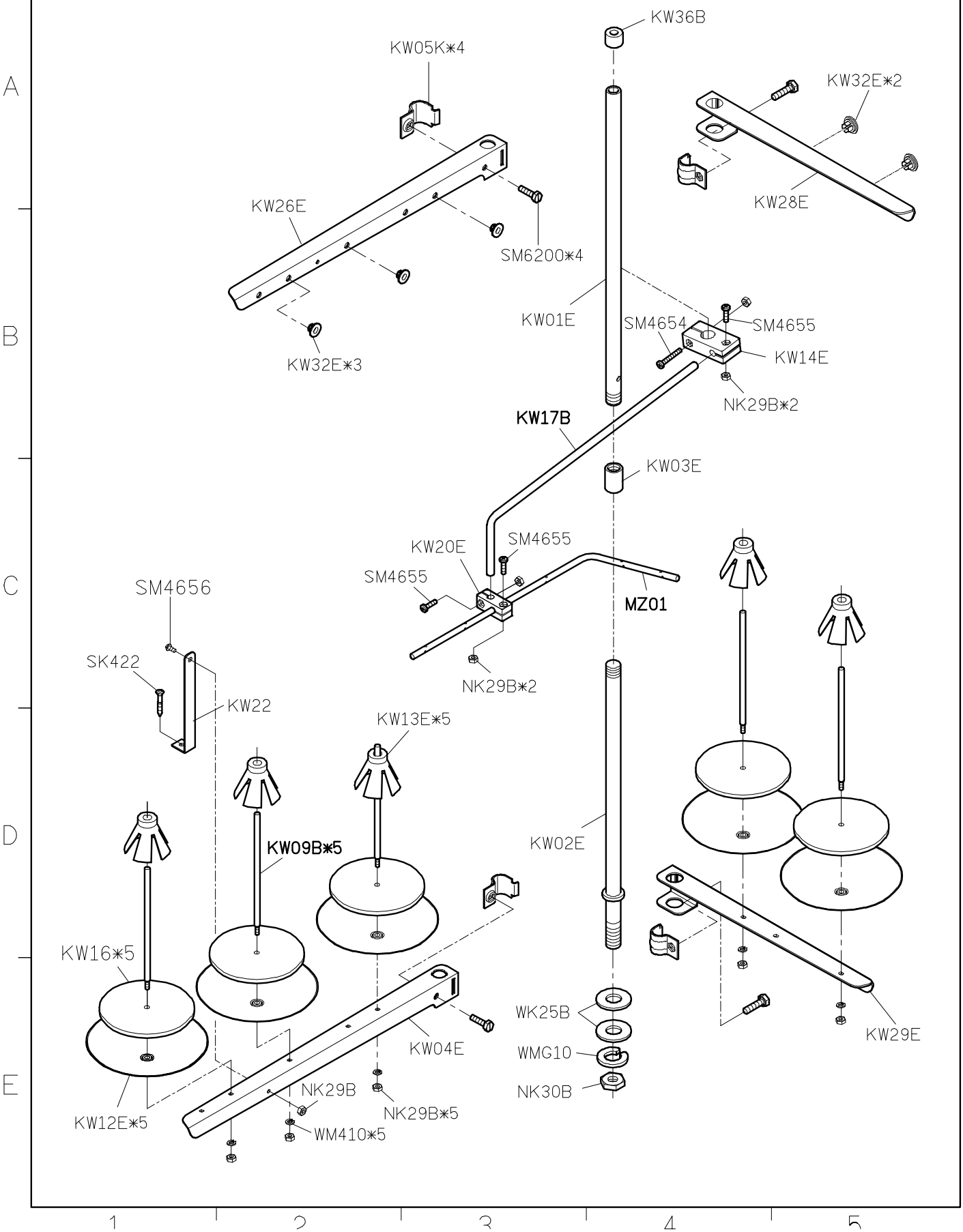

SIRUBA PARTS LIST	Series	Parts Group	Subclass / Remark	Page
	S007K/S007KD U007	MF-K	For S007K/S007KD 2nd Generation	1/1
				Date
				2021/12/20

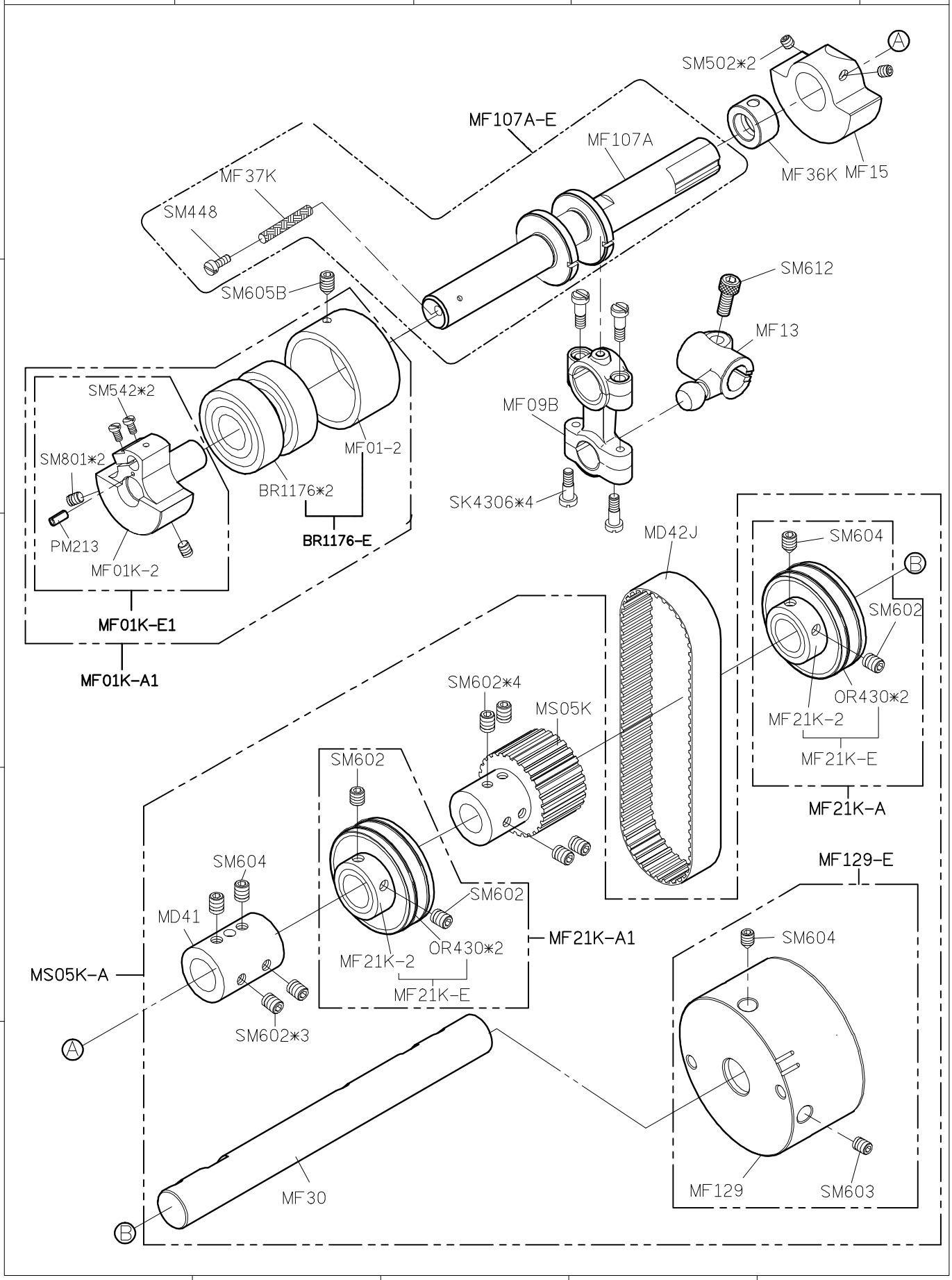

SiRUBA PARTS LIST	Series	Parts Group	Subclass / Remark	Page
	S007K/S007KD U007	MG-K		1/1
				Date
				2021/7/19

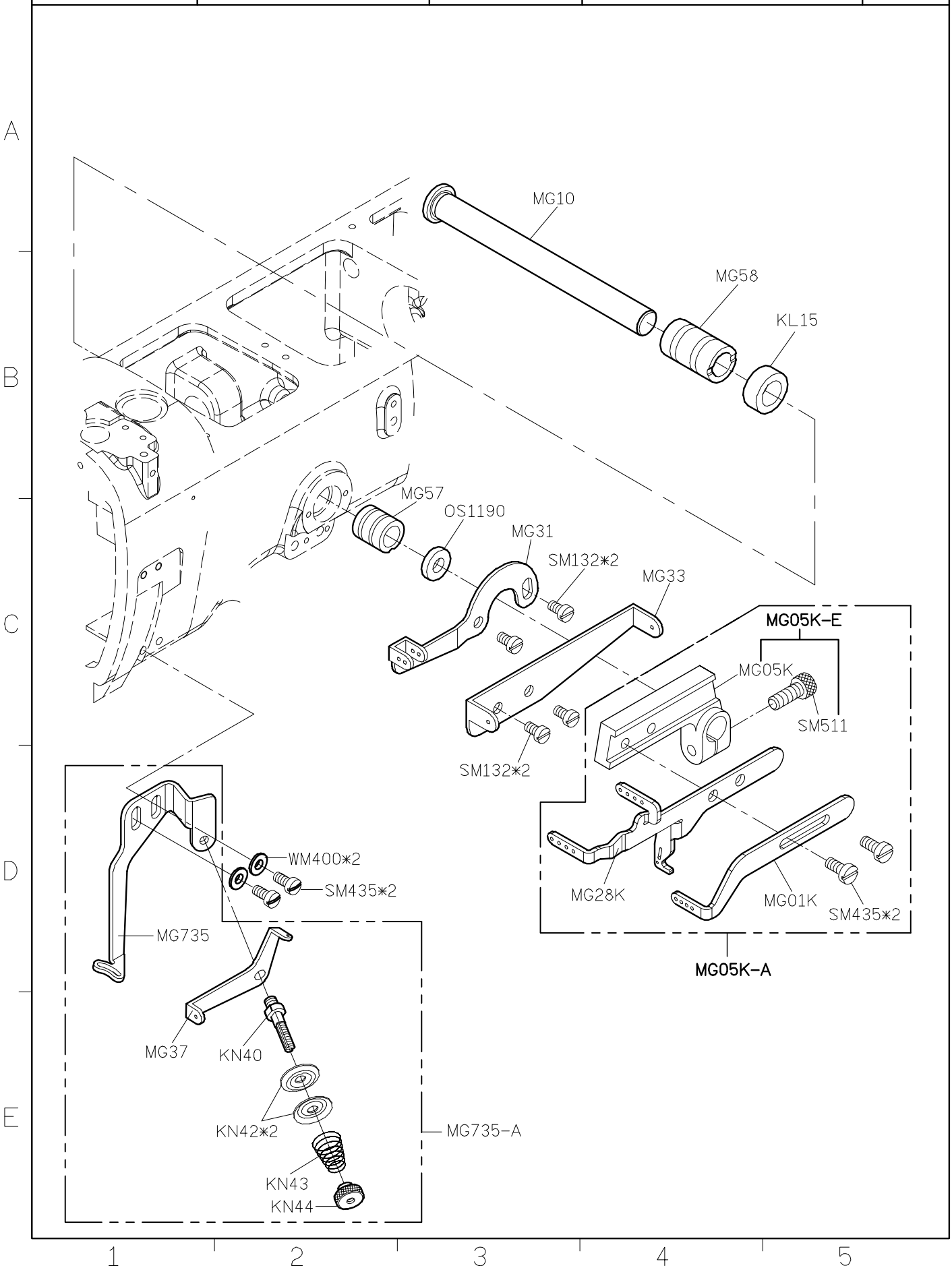

SiRUBA PARTS LIST	Series	Parts Group	Subclass / Remark	Page
	S007K/S007KD U007	MH-K	For S007K/S007KD 2nd Generation	1/1
				Date
				2024/3/20

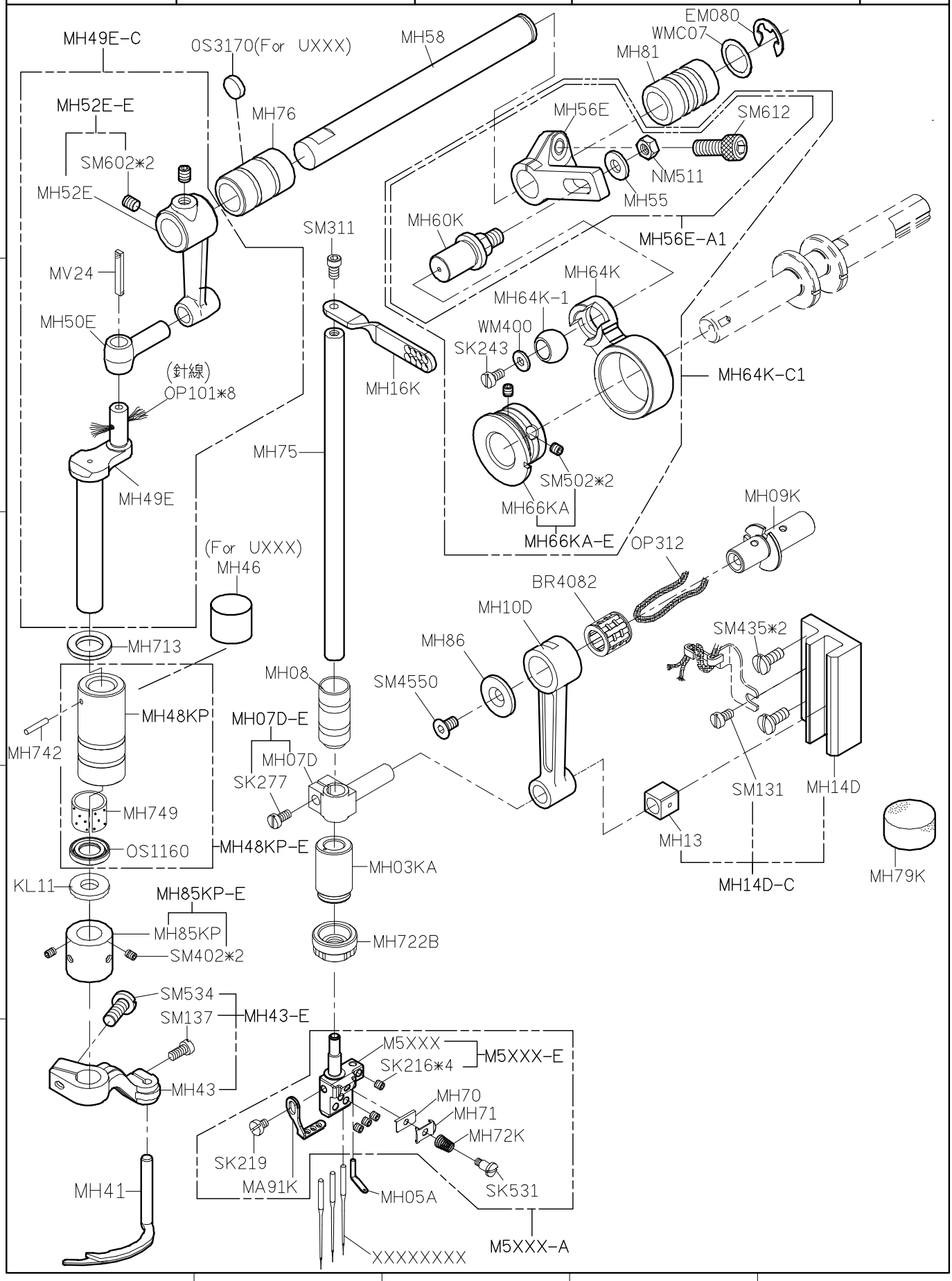

SiRUBA PARTS LIST	Series	Parts Group	Subclass / Remark	Page
	S007K/S007KD U007	MJ-K	For S007K/S007KD 2nd Generation # For U007	1/1
				Date
				2022/12/20

組件代號	零件內容
MJ35K-A3	MJ35K/MJ38/NM610
MJ35K-A5	MJ35K/MJ238/NM610 MJ54K/SM492

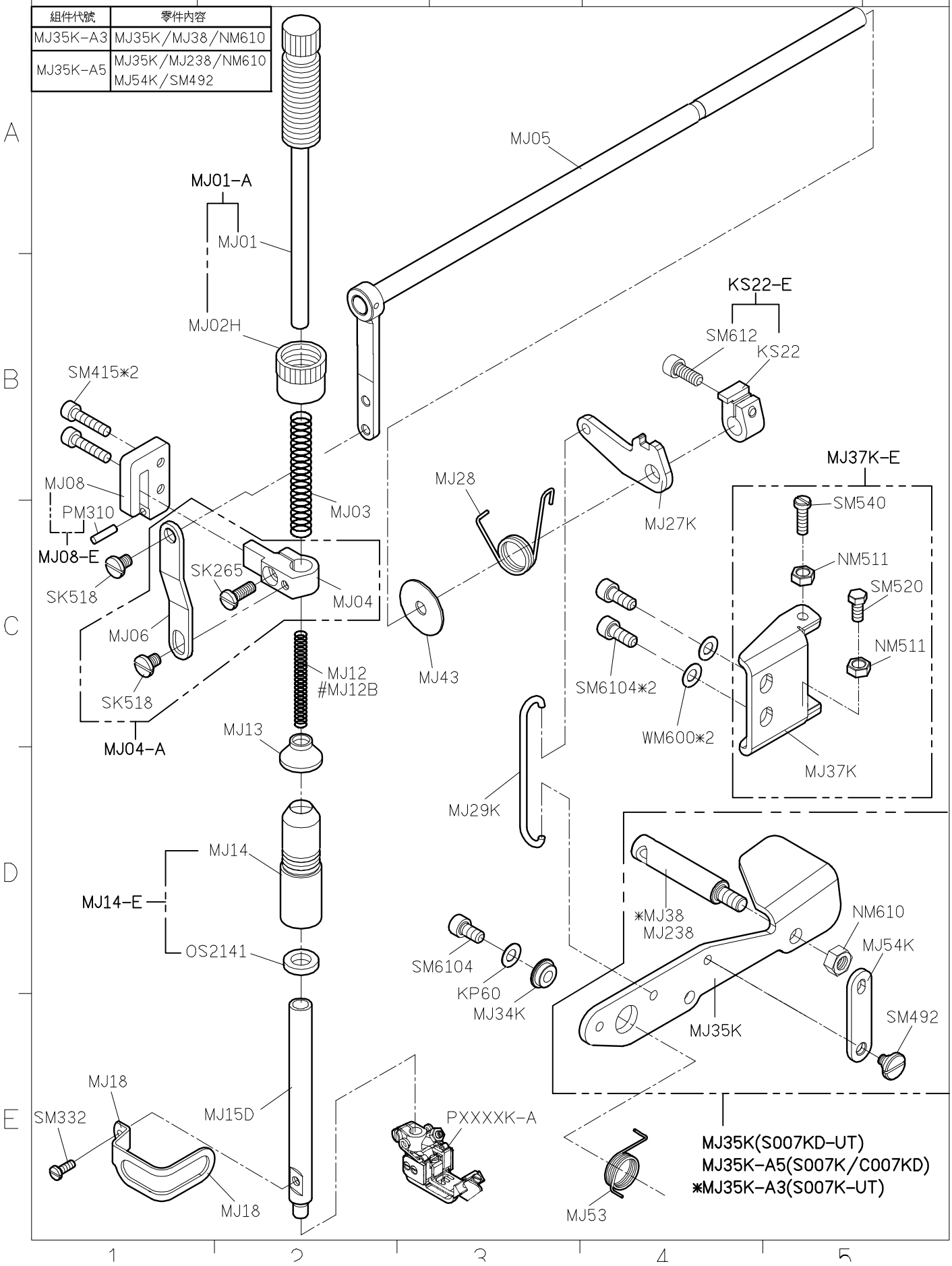

SIRUBA PARTS LIST	Series	Parts Group	Subclass / Remark	Page
	S007K/S007KD S007KP/U007	MK-K	For S007K/S007KD 2nd Generation *:Use for S007KP	1/1
				Date 2020/3/20

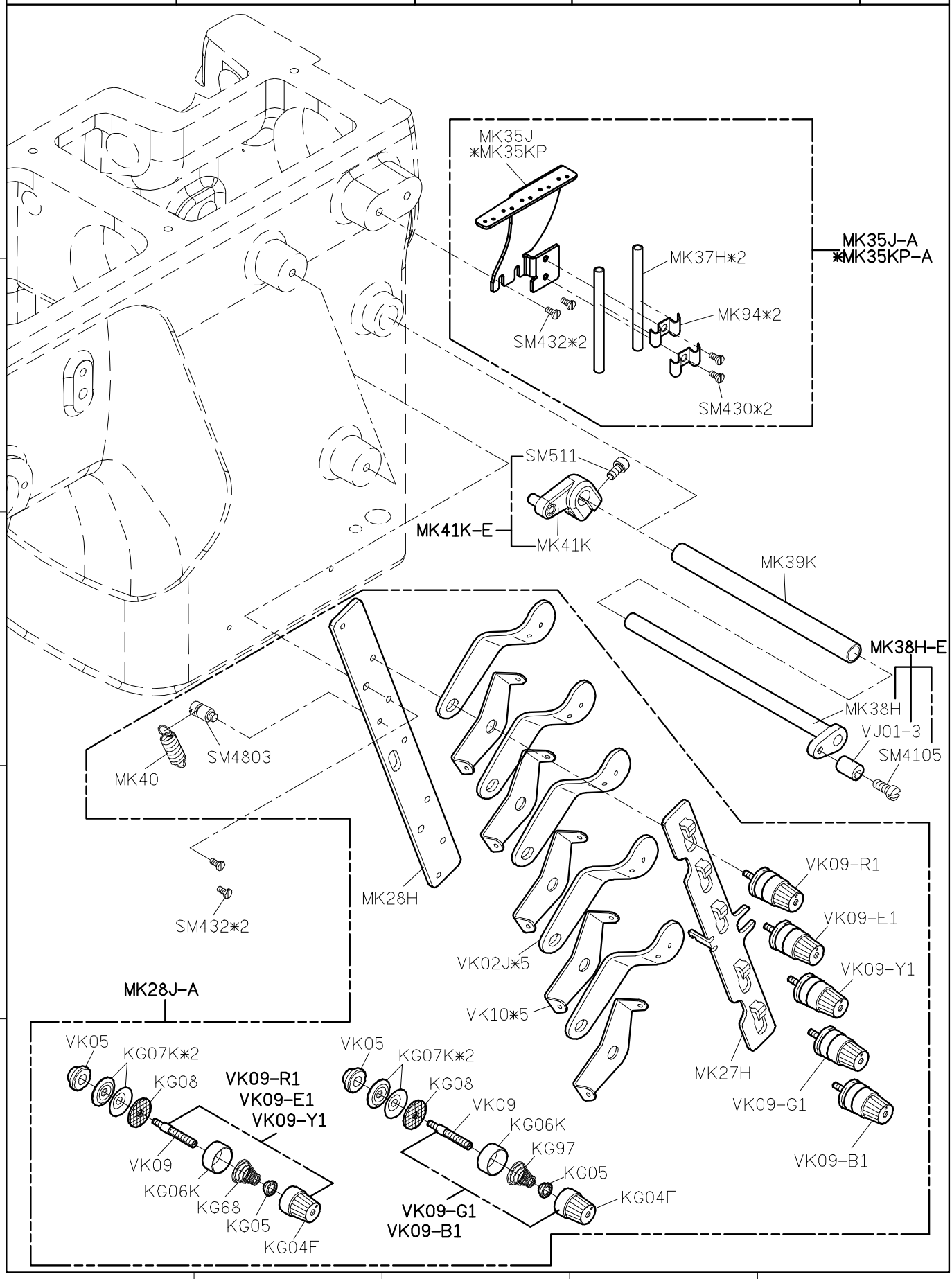

SIRUBA PARTS LIST	Series	Parts Group	Subclass / Remark	Page
	U007	SL-K		1/1
				Date
				2020/9/2

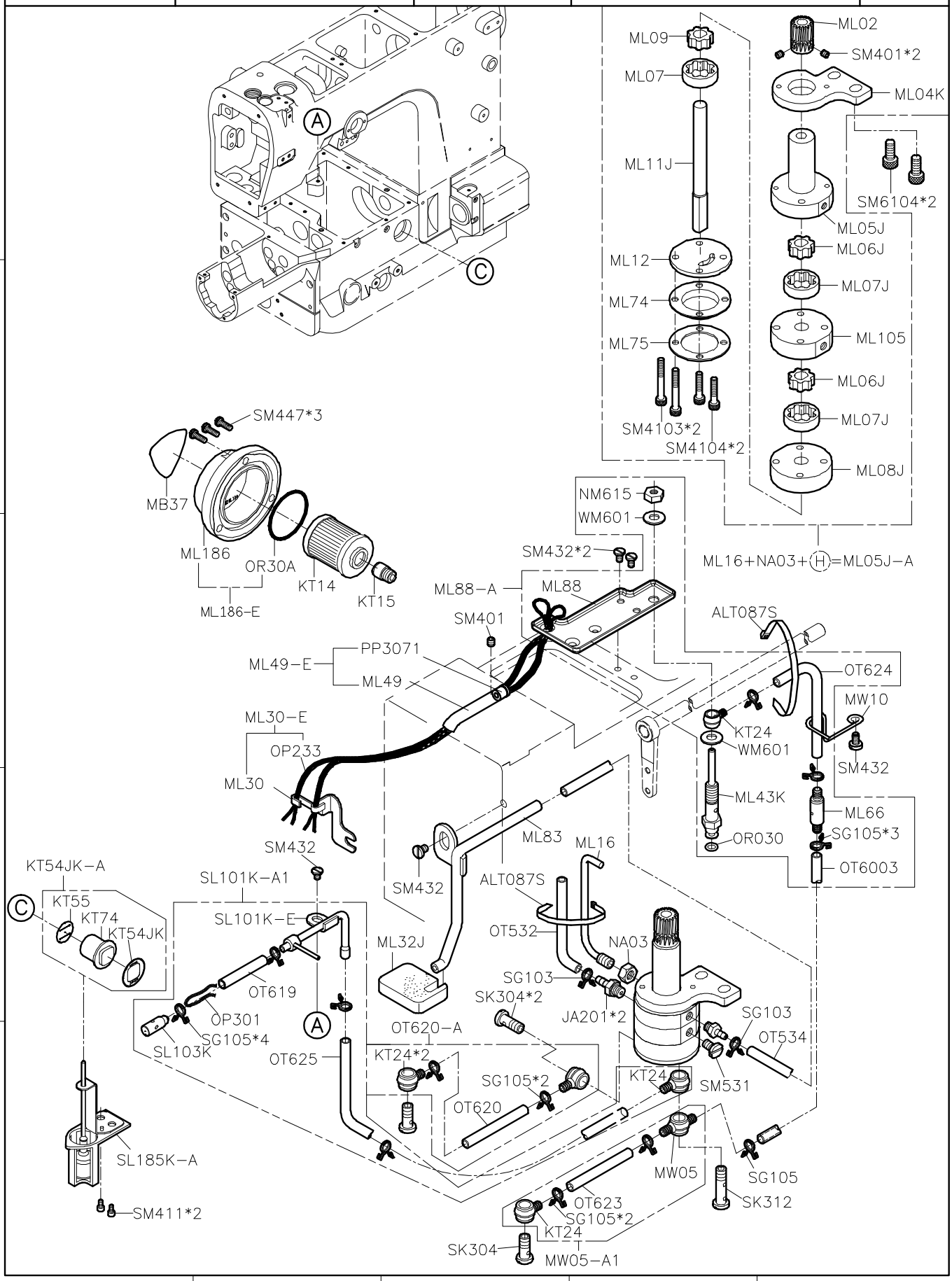

SiRUBA PARTS LIST	Series	Parts Group	Subclass / Remark	Page
	S007K/S007KD U007	SQ-K	For S007K/S007KD 2nd Generation # : use for S007K	1/1
				Date
				2019/09/09

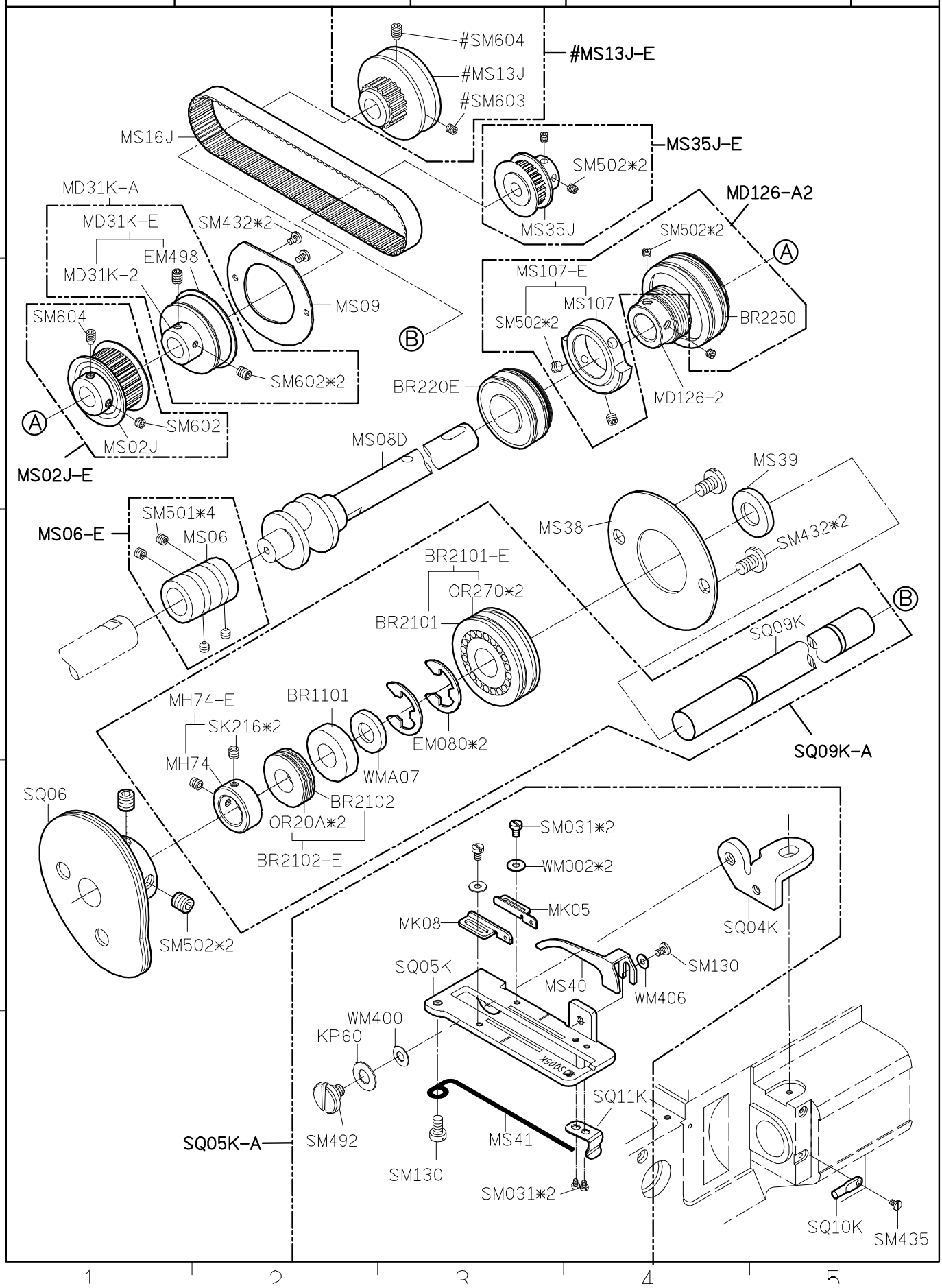

SIRUBA PARTS LIST	Series	Parts Group	Subclass / Remark	Page
	U007	SR-K	# : use for U007 △: use for SW	1/4
				Date
				2023/7/31

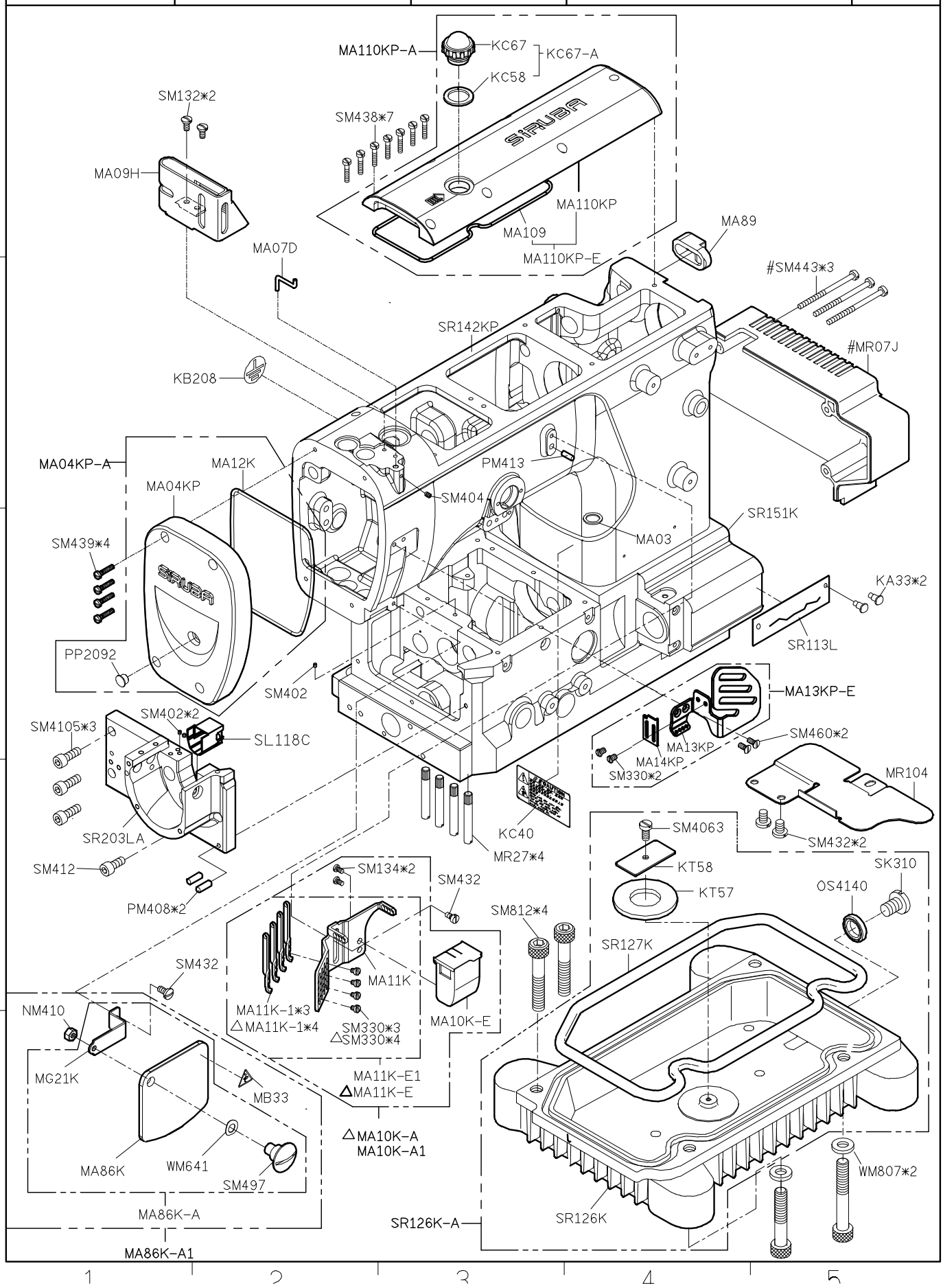

SIRUBA PARTS LIST	Series	Parts Group	Subclass / Remark	Page
	U007	SR-K		2/4
				Date
				2023/7/31

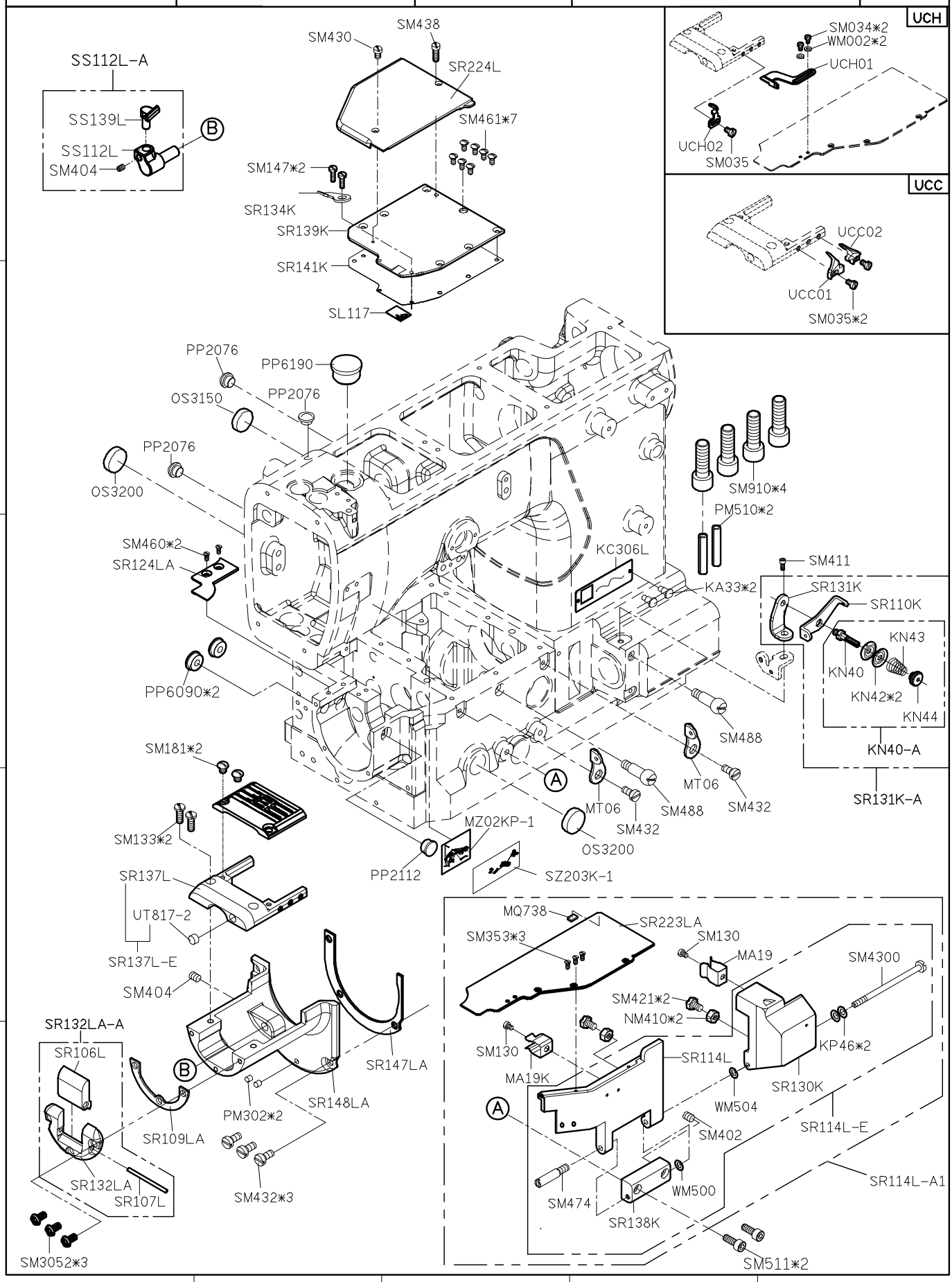

SiRUBA PARTS LIST	Series	Parts Group	Subclass / Remark	Page
	U007	SR-K	For S007K/S007KD 2nd Generation For Direct-Drive Motor (H牌) #For Pneumatic Automatic %For Electric Automatic	3/4
				Date
				2023/7/31

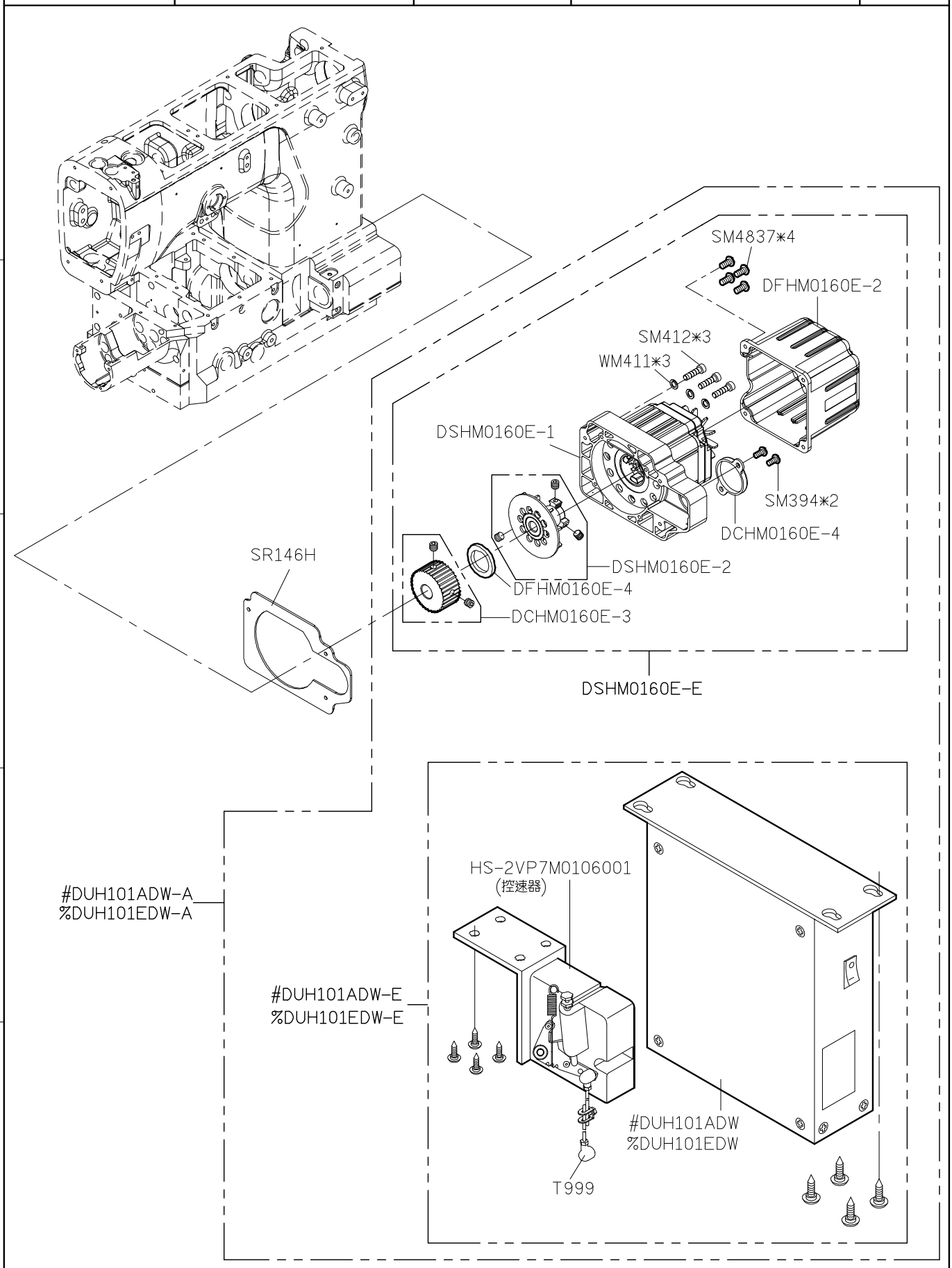

SIRUBA PARTS LIST	Series	Parts Group	Subclass / Remark	Page
	U007	SR-K	For Direct-Drive Motor #For Pneumatic Automatic %For Electric Automatic	4/4
				Date
				2023/7/31

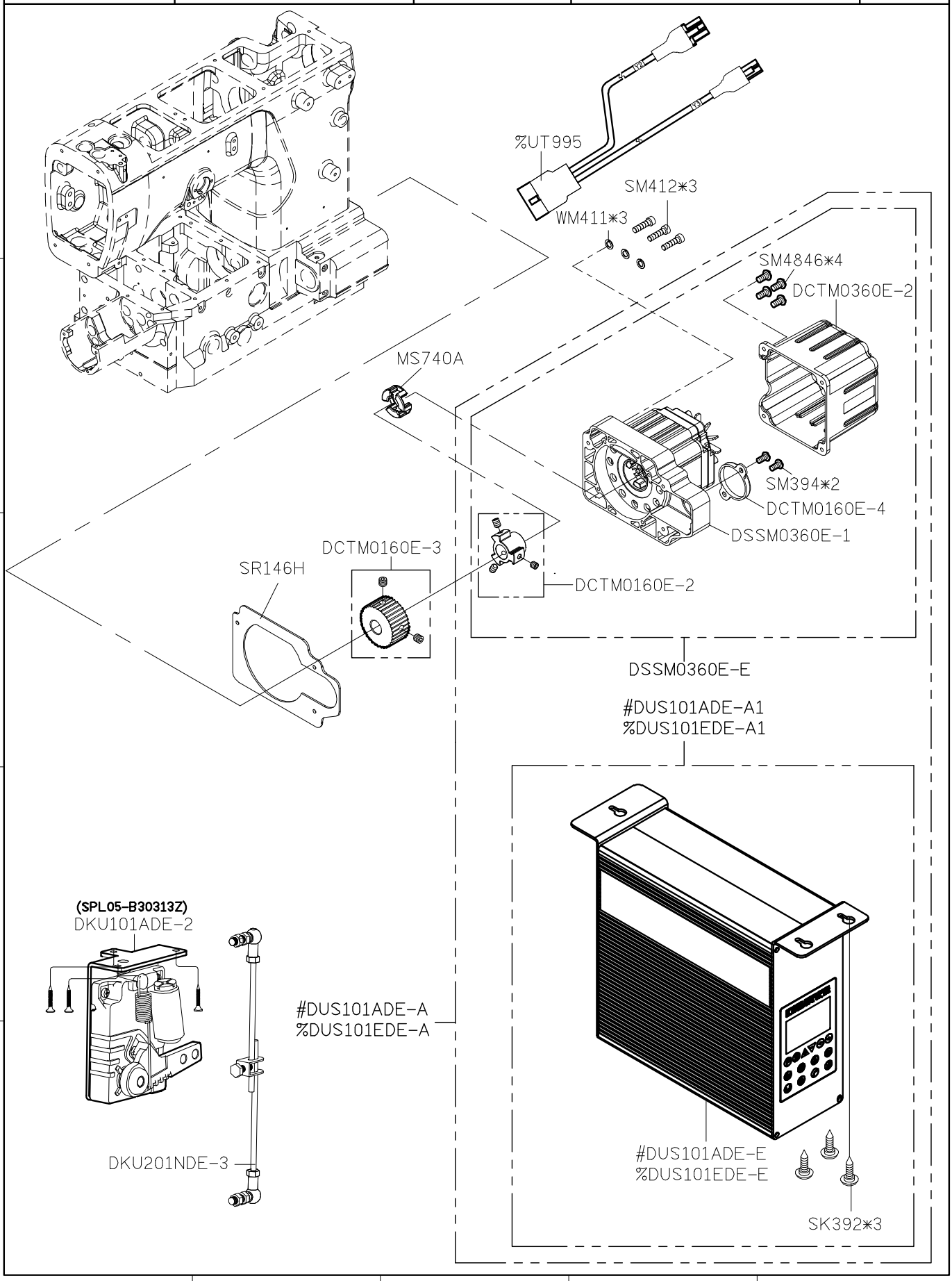

SiRUBA PARTS LIST	Series	Parts Group	Subclass / Remark	Page
	U007	SS-K		1/1
				Date
				2023/11/22

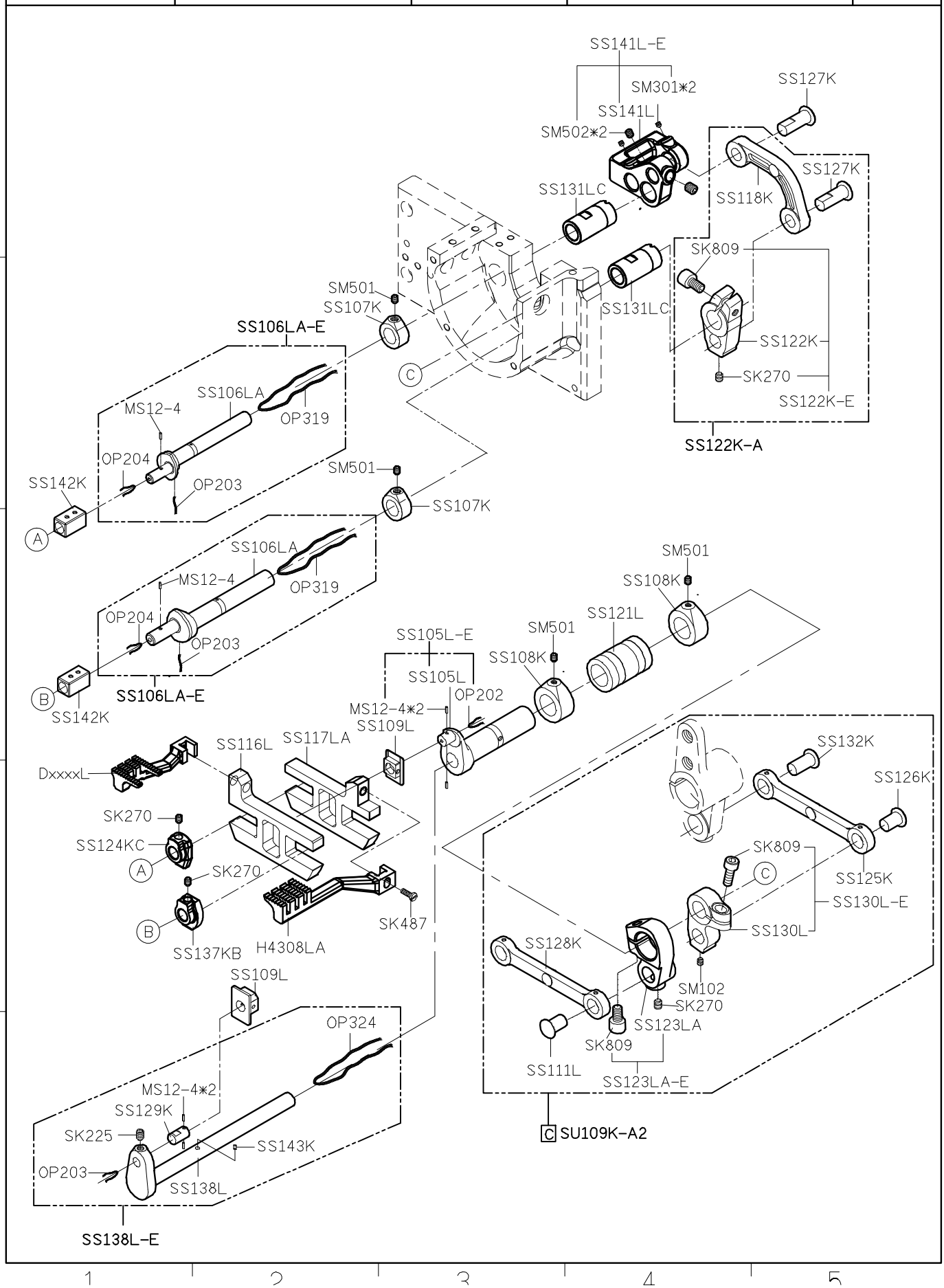

SiRUBA PARTS LIST	Series	Parts Group	Subclass / Remark	Page
	U007	ST-K		1/1
				Date
				2020/12/30

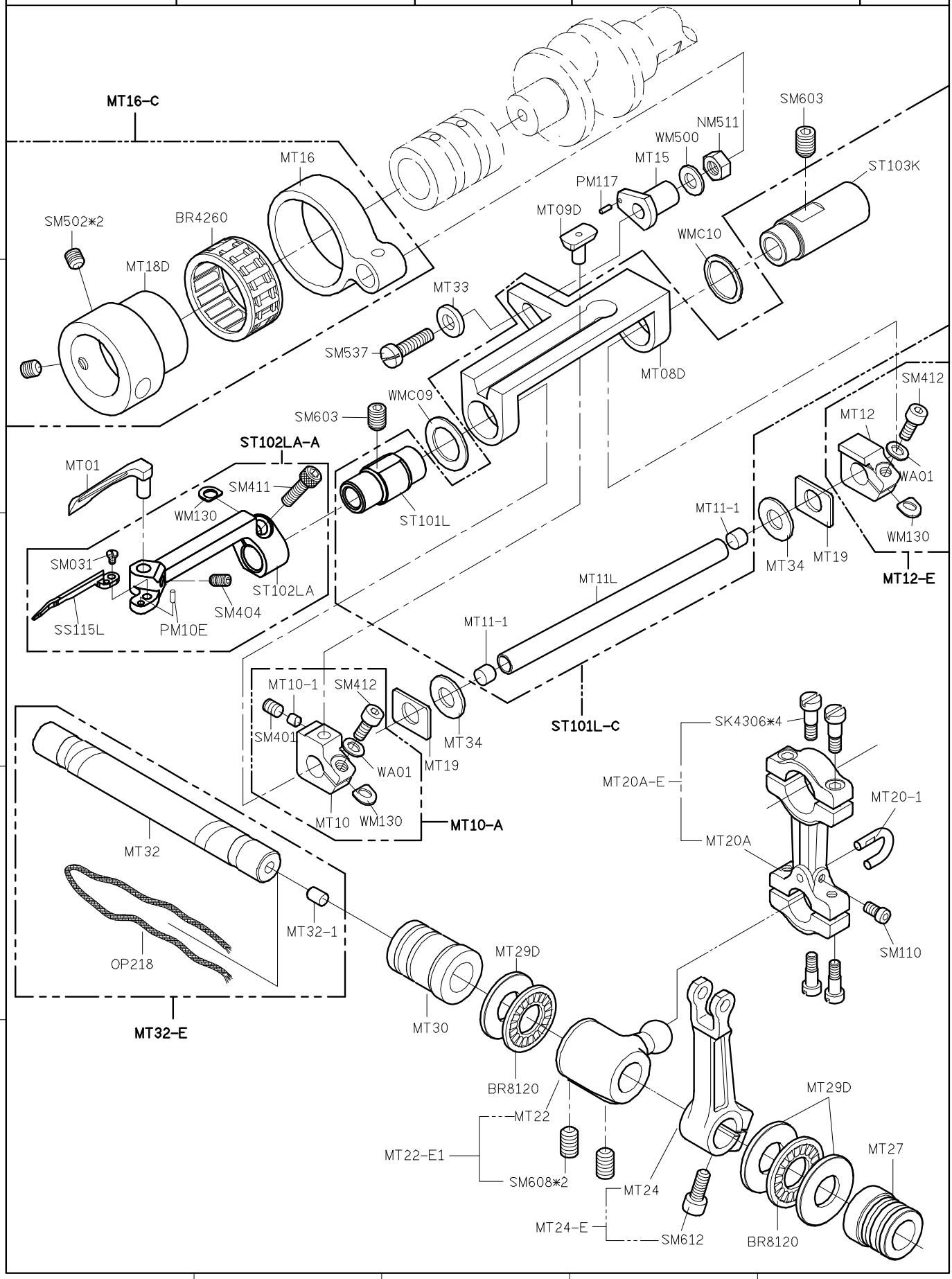

SiRUBA PARTS LIST	Series	Parts Group	Subclass / Remark	Page
	S007K/S007KD U007	SU-K	For S007K/S007KD 2nd Generation	1/1
				Date
				2019/9/9

A + B = SU109K-A1　　A + C = SU109K-A2(USE FOR U007)

SU系列　SS系列　　SU系列　SS系列

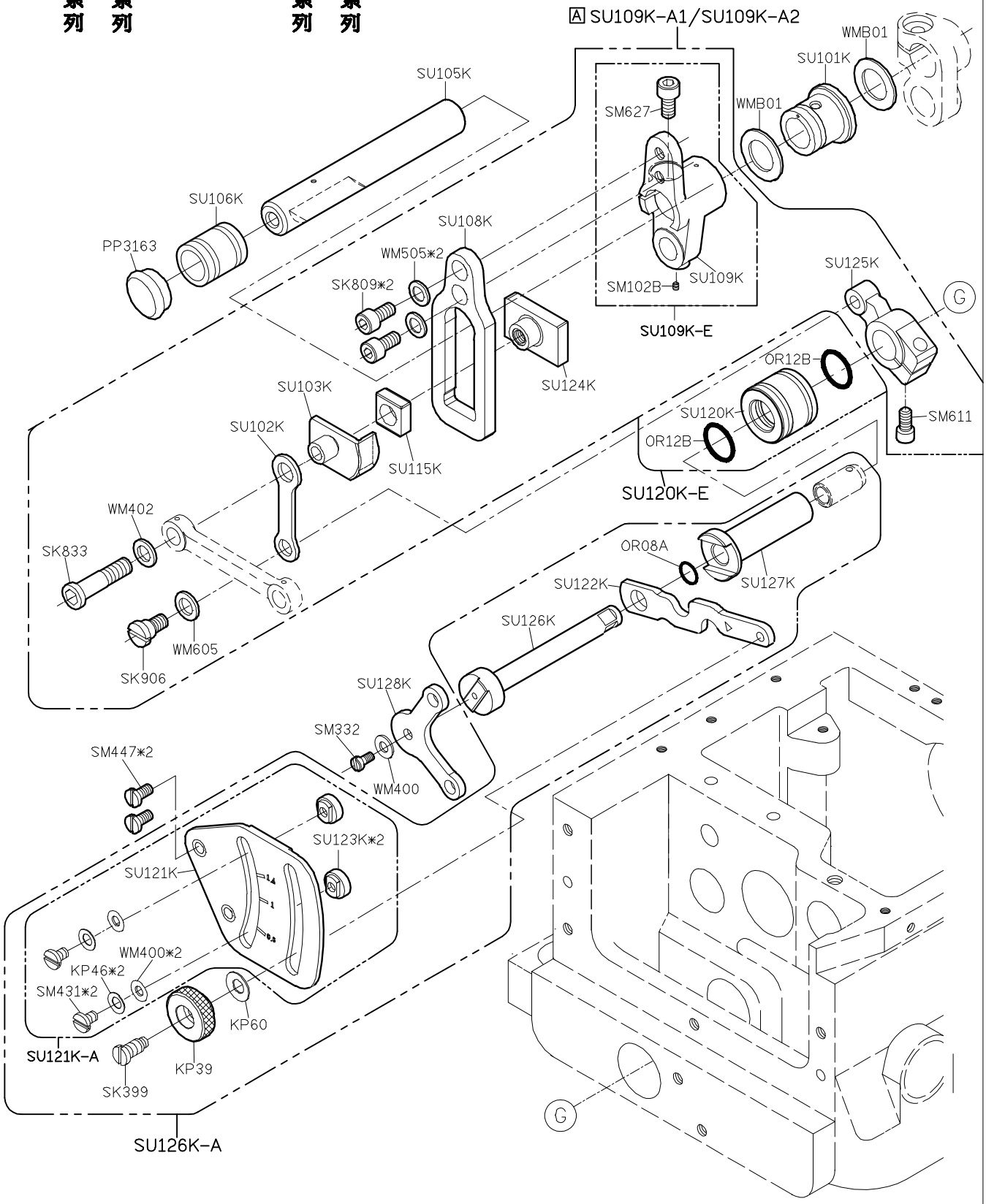

SiRUBA PARTS LIST	Series	Parts Group	Subclass / Remark	Page
	S007K/S007KD U007	SV-K	For S007K/S007KD 2nd Generation #For S007K/S007KD * Use For U007	1/1
				Date
				2022/11/17

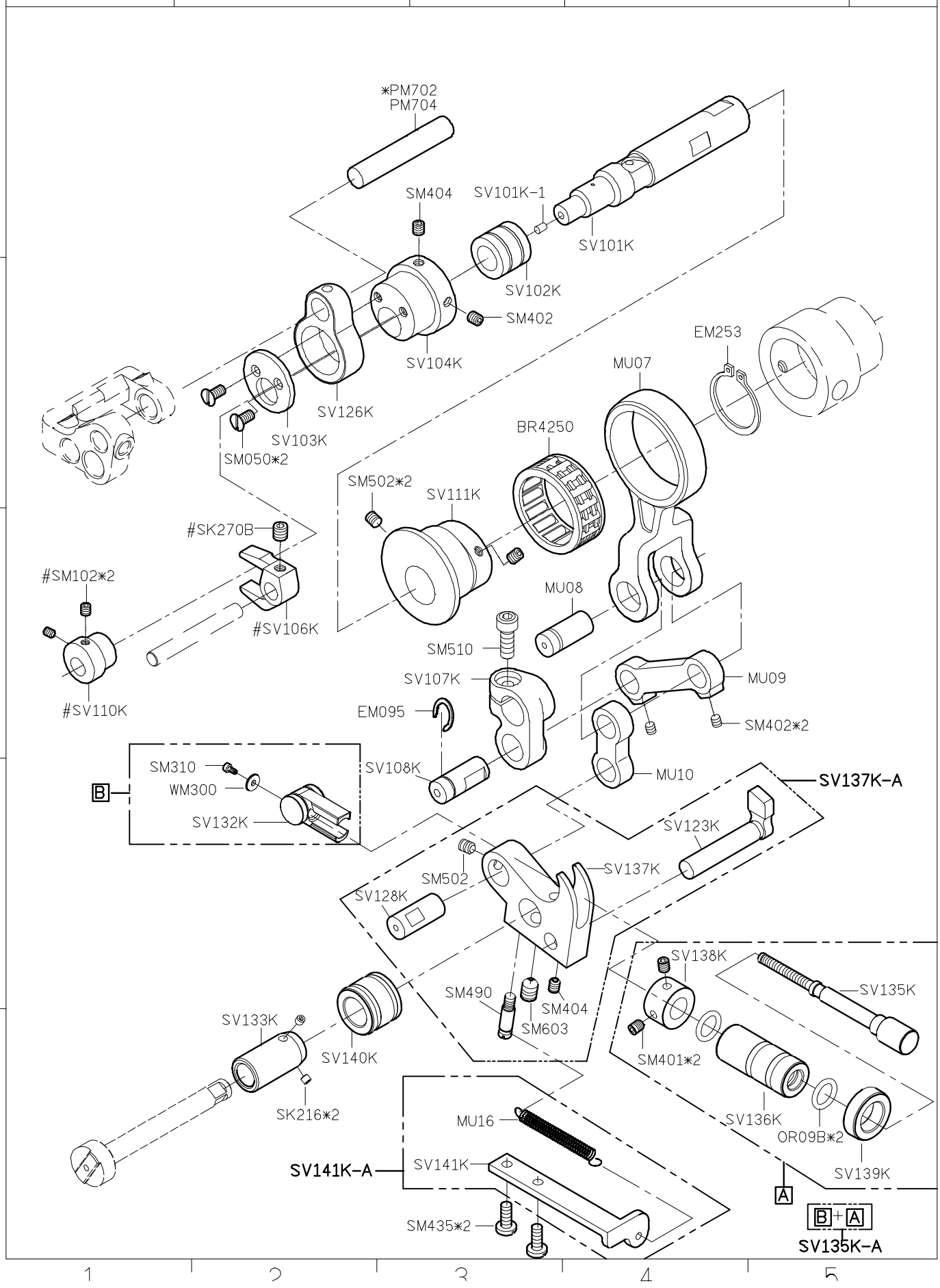

SiRUBA PARTS LIST	Series	Parts Group	Subclass / Remark	Page
	S007K/S007KD U007	SY-K	For S007K/S007KD 2nd Generation	1/1
				Date
				2019/9/9

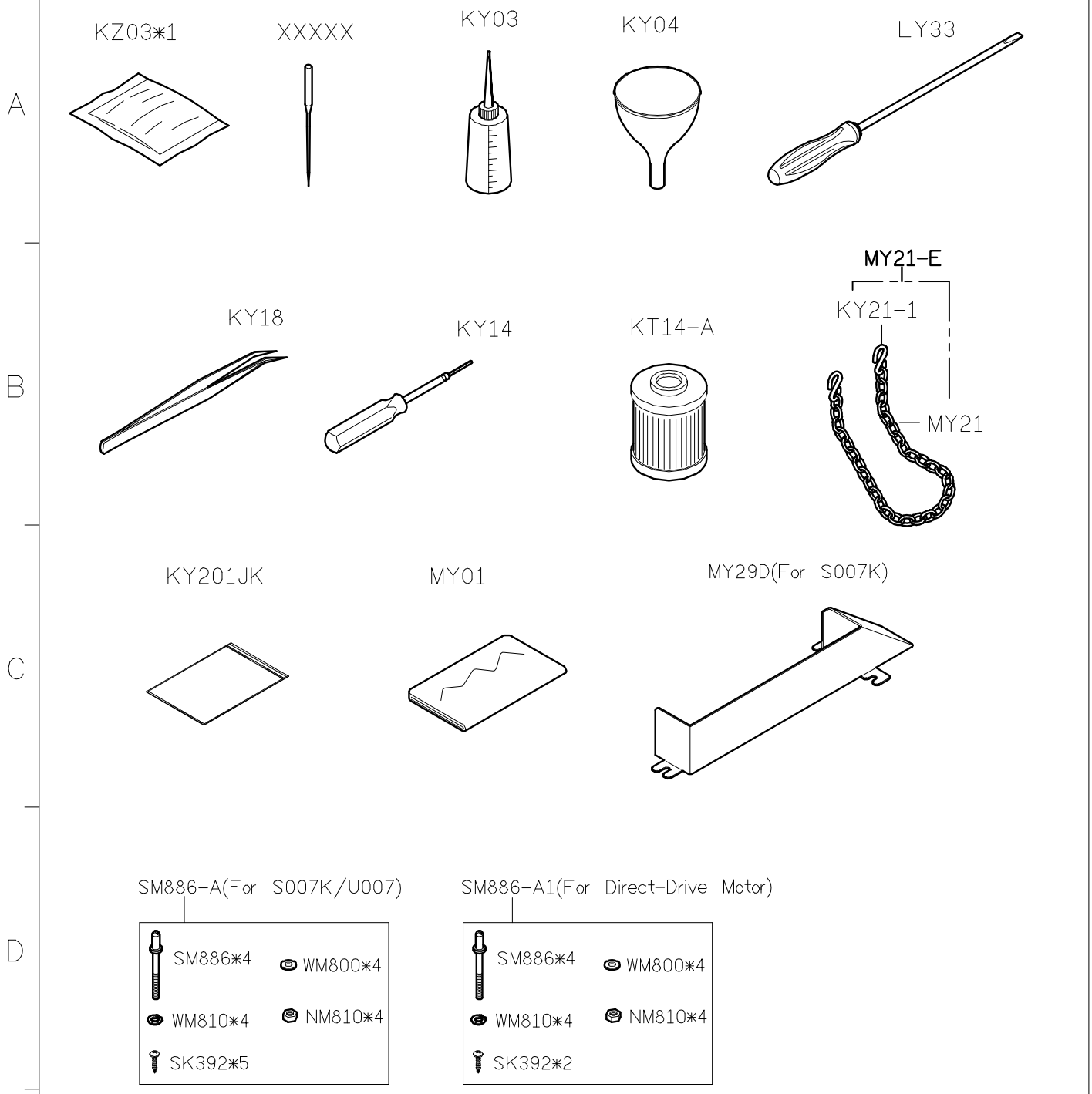

SIRUBA PARTS LIST	Series	Parts Group	Subclass / Remark	Page
	S007K/S007KP U007	SZ-K	* : USE FOR S007KP	1/2
				Date
				2019/9/9

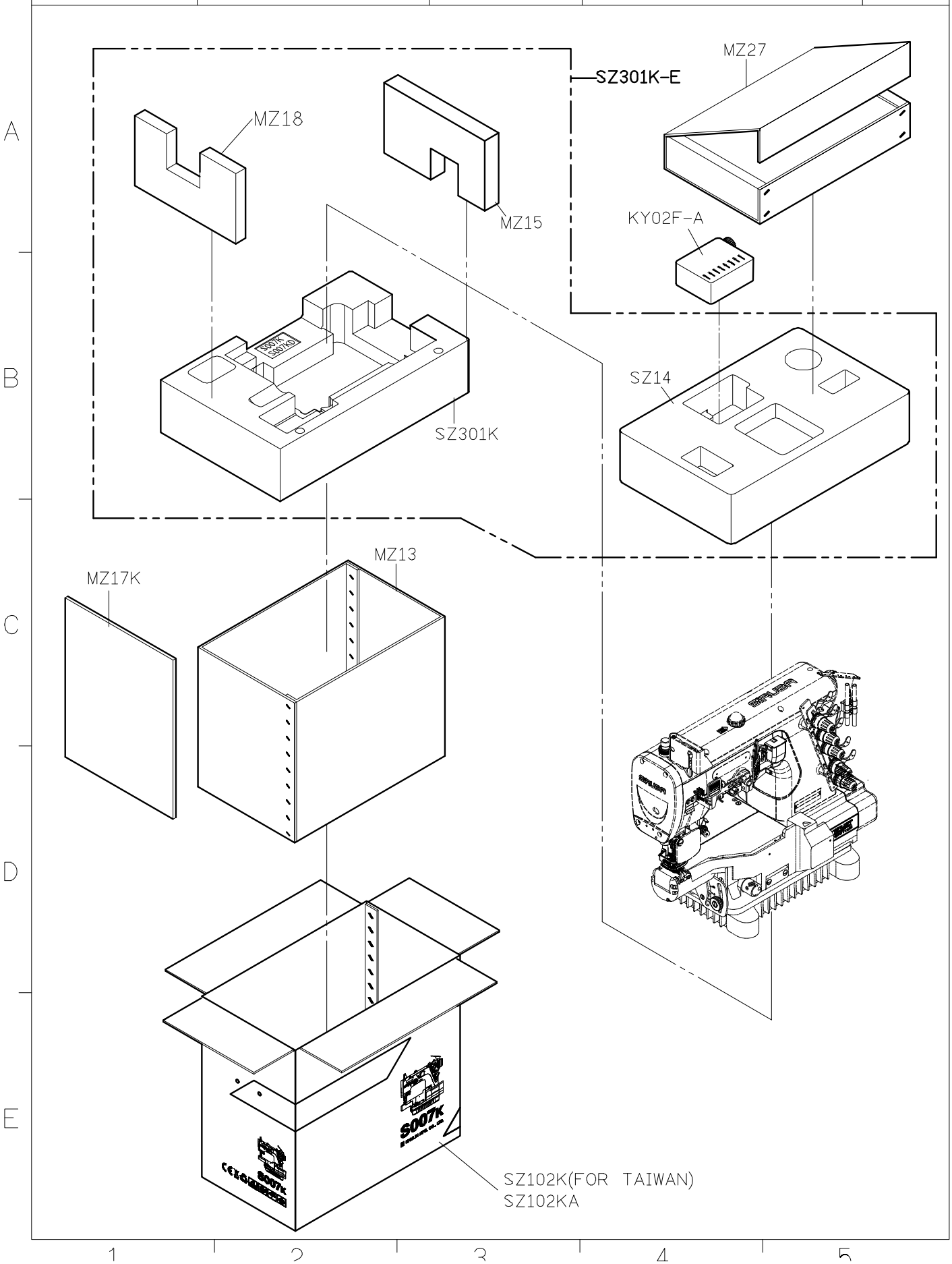

SIRUBA PARTS LIST	Series	Parts Group	Subclass / Remark	Page
	S007KD/U007	SZ-K	@: Use for Drive Motor+UT * : USE FOR U007	2/2 Date 2019/9/9

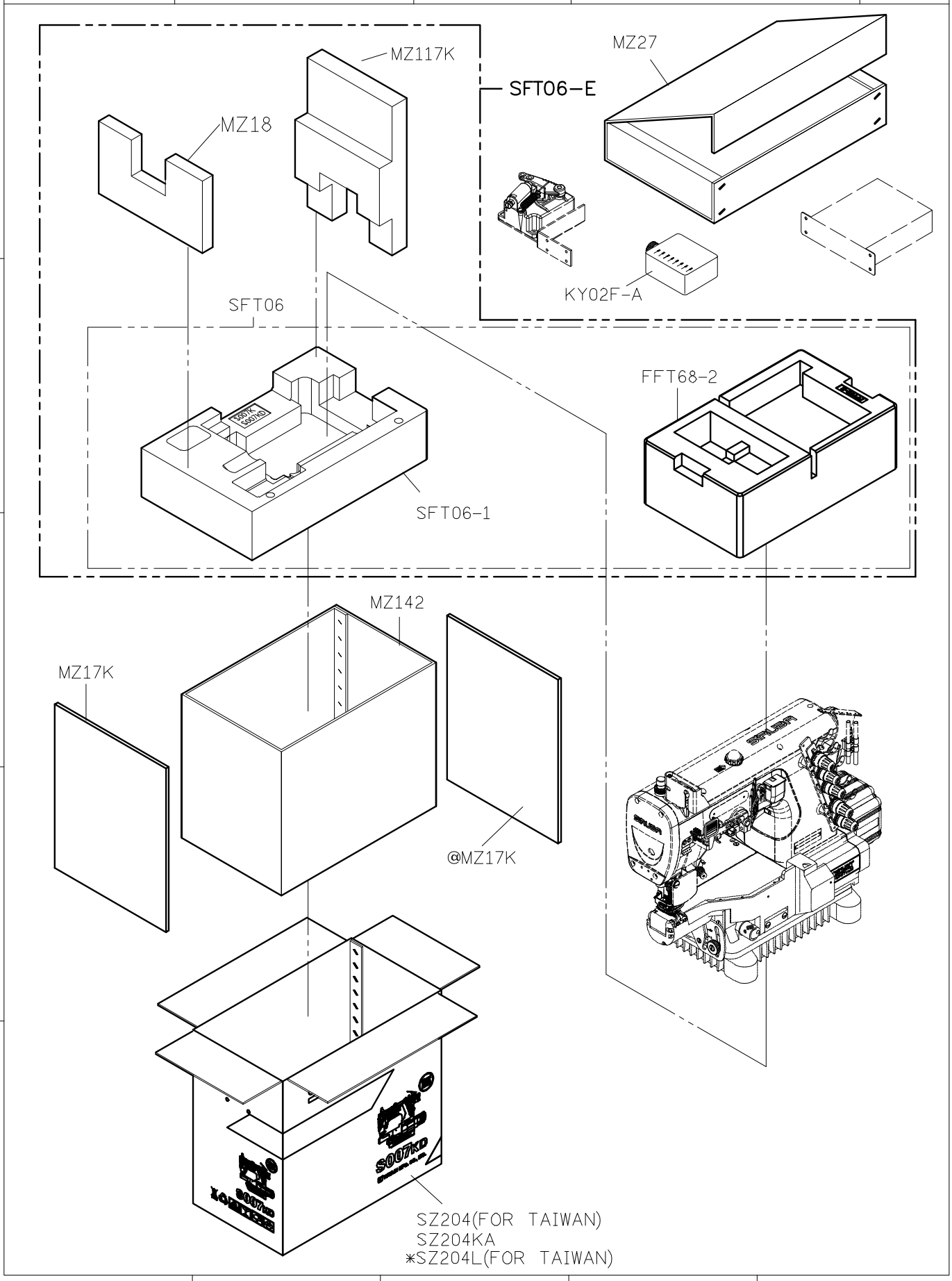

SiRUBA TABLE CUT - OUT	Series	Item Code	Subclass / Remark	Mounting
	C007K/C007KD C858K/C858KD S007K/S007KD	C007K-T23	For All Series	Semi-submerged
				Date
				2013/01/28

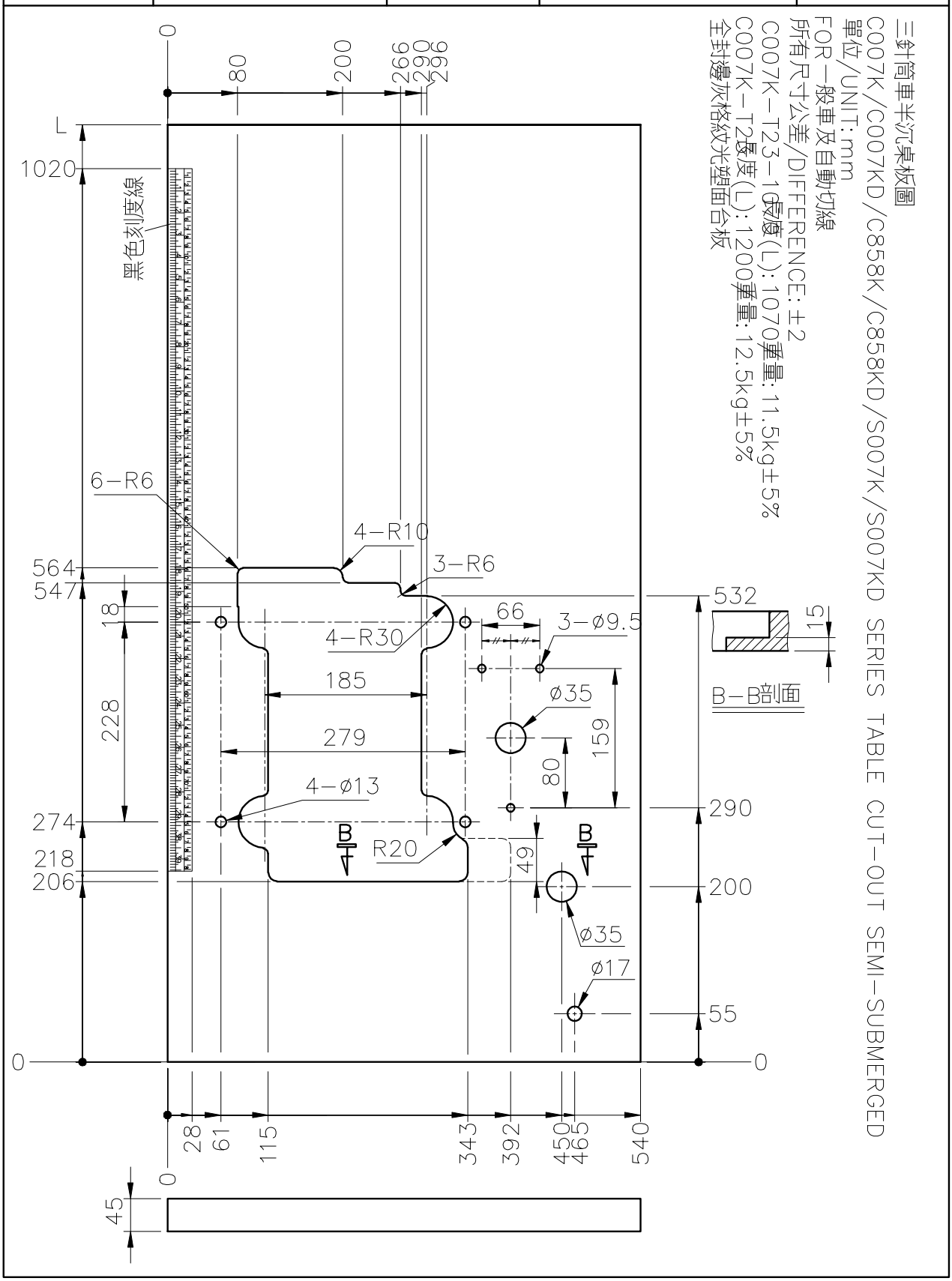

SIRUBA TABLE CUT - OUT	Series	Item Code	Subclass / Remark	Mounting
	C007K/C007KD C858K/C858KD S007K/S007KD	C007K-T25	For All Series excluding ① RLP,RLQ Celastic tape attaching ② CRL Models ③ Condesed stitch(CAR,CMR,SAR,SER··)	Non-submerged **Date** 2013/01/26

三針筒車上乘桌板圖
C007K/C007KD/C858K/C858KD/S007K/S007KD SERIES TABLE CUT-OUT NON-SUBMERGED
單位/UNIT:mm
FOR CRL.CRL/UTP.Q
所有尺寸公差/DIFFERENCE:±2
C007K-T25-1070長度(L):1070/重量:11.3kg±5%
C007K-T25長度(L):1200/重量:12.3kg±5%
全封邊灰格紋光塑面台板

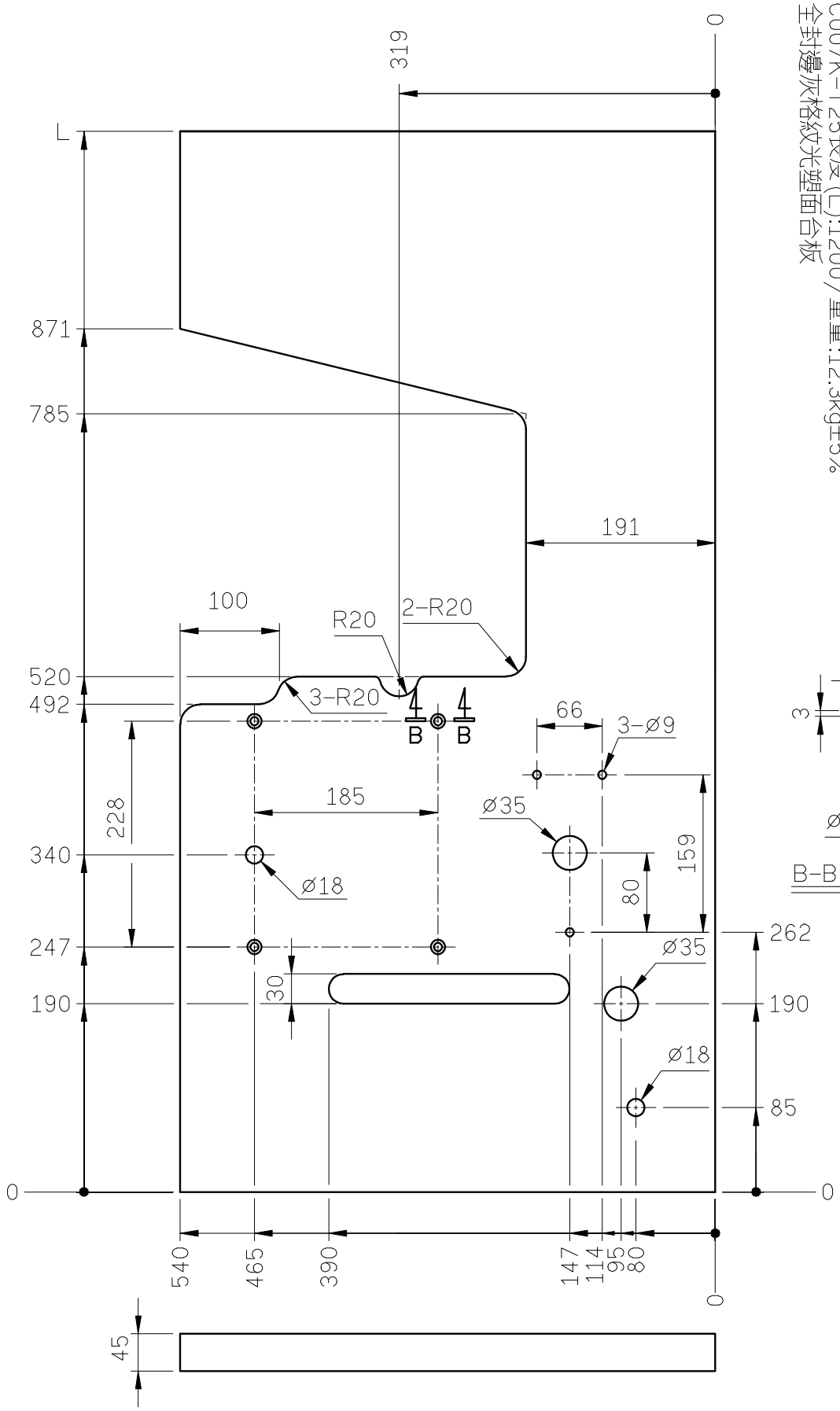

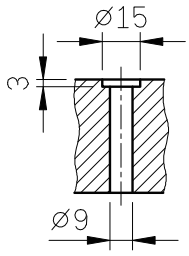

B-B 剖面(1/3)

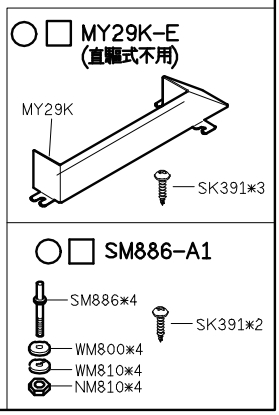

SiRUBA	Series	Item Code	Subclass / Remark	Mounting
TABLE CUT - OUT	C007J/C007K	C007-T30		Non-submerged
				Date
				2016/10/03

三針筒車上乘桌板圖
C007J/C007K SERIES TABLE CUT-OUT NON-SUBMERGED
單位/UNIT:mm
FOR 印度客戶使用
所有尺寸公差/DIFFERENCE:±2
C007-T30-1070長度(L):1070/重量:11.3kg±5%
C007-T30長度(L):1200/重量:12.3kg±5%
全封邊灰格紋光塑面台板

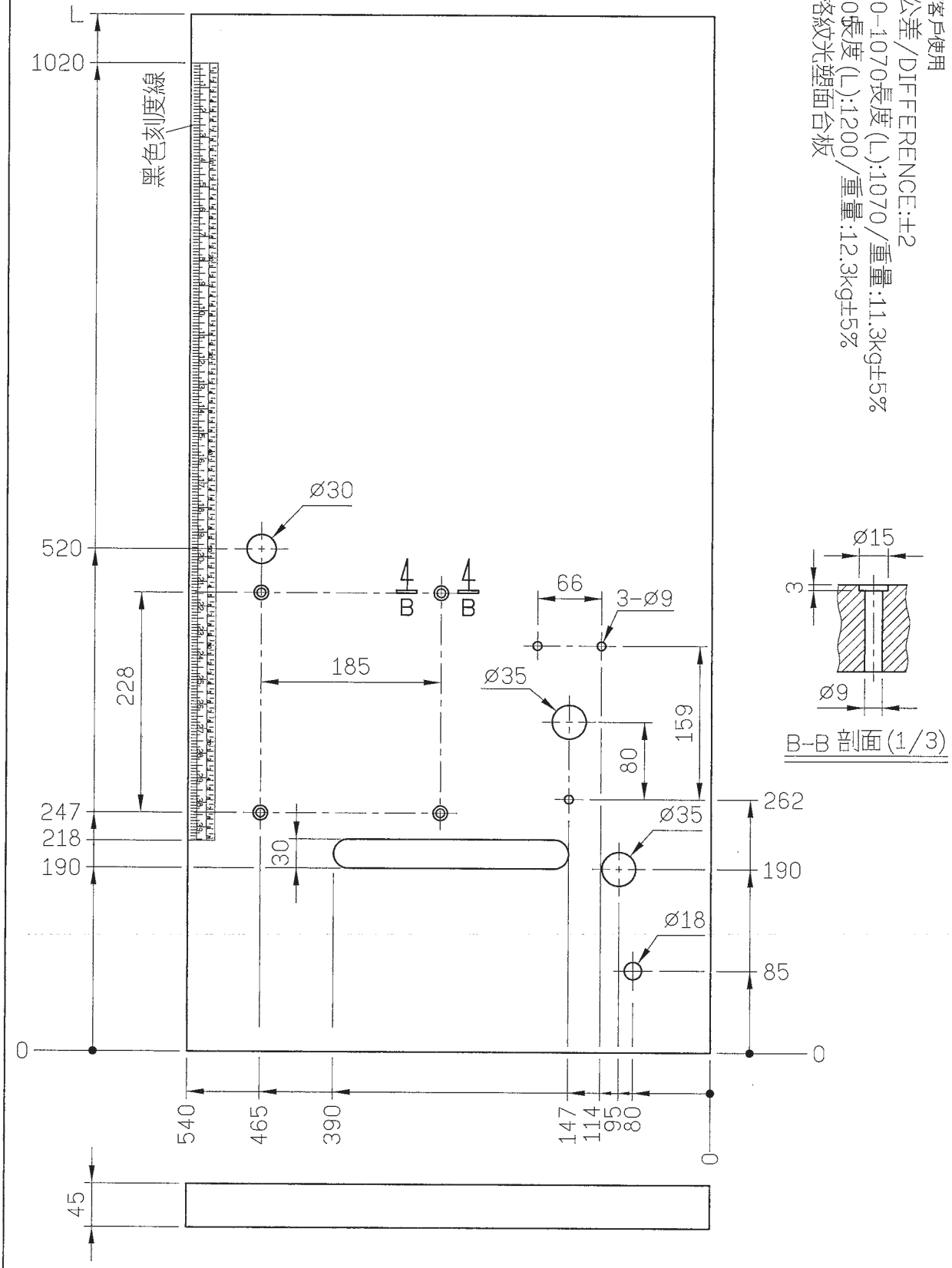

SiRUBA	Series	Item Code	Subclass / Remark	Mounting
TABLE CUT - OUT	C007K	C007K-T32		Non-submeged
				Date
				2017/08/22

三針筒車上乘式桌板
C007K SERIES TABLE CUT-OUT NON-SUBMERGED
單位/UNIT:MM
FOR一般車及自動切線
所有尺寸公差/DIFFERENCE:±2
全封邊灰格紋光塑面台板
for SILMAQ.

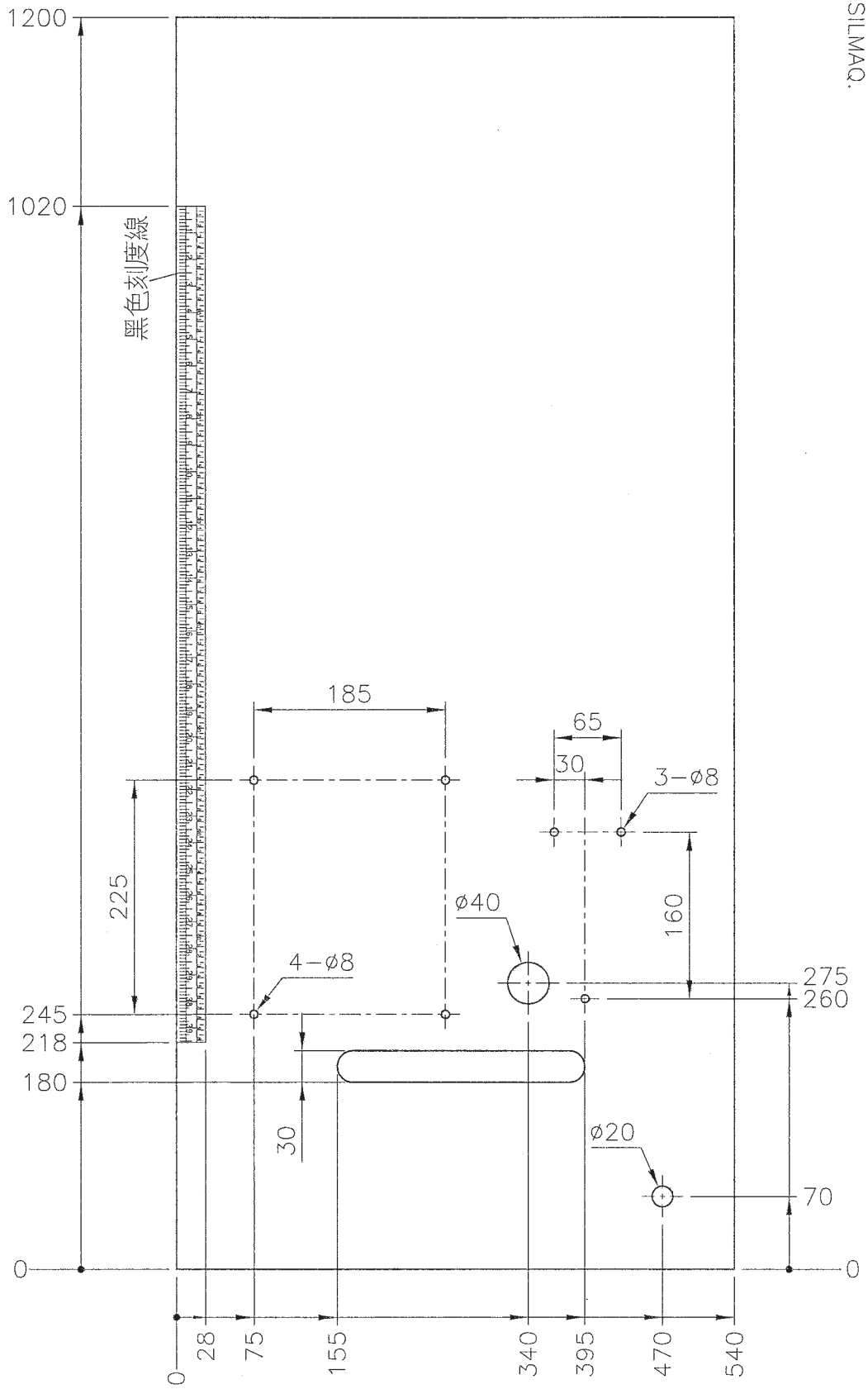

SiRUBA	Series	Item Code	Subclass / Remark	Mounting
TABLE CUT - OUT	C007KD	C007K-T33		Non-submeged
				Date
				2017/08/22
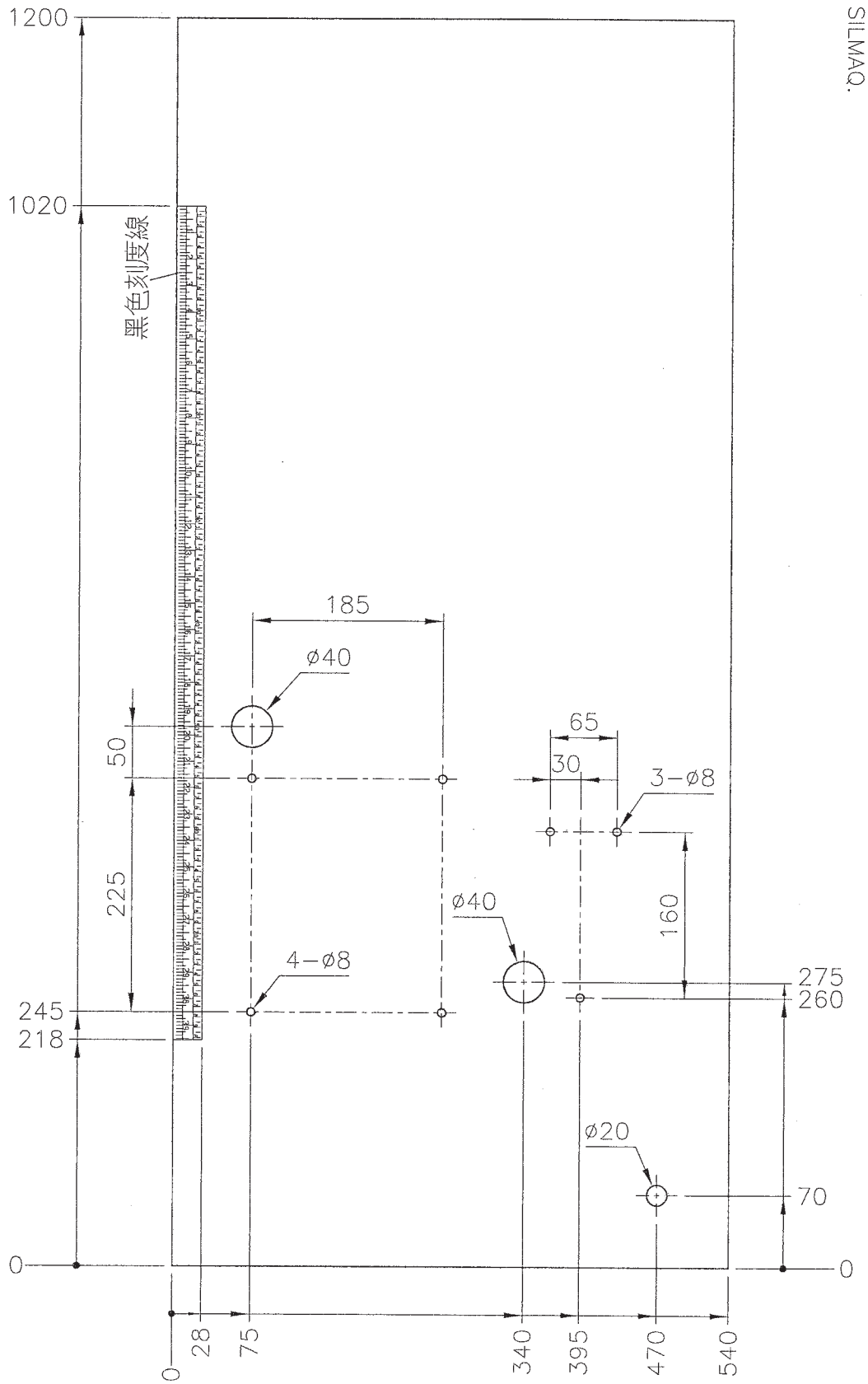
三針筒車上乘式桌板
C007KD SERIES TABLE CUT-OUT NON-SUBMERGED
單位/UNIT:MM
FOR一般車及自動切線
所有尺寸公差/DIFFERENCE:±2
全封邊灰格紋光塑面合板
for SILMAQ.