電控參數說明書
ELECTRONIC CONTROL PARAMETER MANUAL

SiRUBA ELECTRIC SYSTEM
KAULIN MFG. CO., LTD.

700LD

CE

EC 指令自我宣告書：

本公司在此宣告以下產品系列：
AC 伺服馬達—HD 系列

皆符合以下 EC 指令的規定：
-EC 低電壓指令 (2014/35/EU)
-EC 電磁兼容指令(2014/30/EU)
-EC 機械指令 (2006/42/EC)

及配合相關安全標準如下：
EN ISO 12100:2100- 機械安全– 基本概念，設計的一般原則。
EN 60204-1:2006/AC:2010-機械安全-機械電氣設備。
EN 60204-31:2013- 機械之電機設備之安全。

有毒物質限量指令自我宣告書：

本公司在此宣告以下產品系列：
AC 伺服馬達—HD 系列

皆符合以下指令的規定：
1. 歐盟RoHS 指令(2011/65/EU & (EU) 2015/863)
2. 中華人民共和國電子行業標準：
電子信息產品中有毒有害物質的限量要求
(SJ/T 11363-2006)

本公司產品本身(馬達,控制箱)或其包裝材料及附件(紙箱,螺絲配件包,說明書,貼紙,標籤,印刷品...等等)或其元件與原材料供應商皆依照歐盟 RoHS 指令及中華人民共和國電子行業標準的限量規定而符合以下所列之十種有害物質的限量要求：

有毒物質	含量限值 (PPM)
鉛 (Pb)	1000
汞 (Hg)	1000
鎘 (Cd)	100
六價鉻 (Cr VI)	1000
多溴聯苯 (PBB)	1000
多溴二苯醚 (PBDE)	1000
鄰苯二甲酸二酯(DEHP)	1000
鄰苯二甲酸丁酯苯甲酯(BBP)	1000
鄰苯二甲酸二丁酯(DBP)	1000
鄰苯二甲酸二異丁酯(DIBP)	1000

＊ 基板的無鉛製程：總鉛含有濃度基準量 800 ppm 以下。
＊ 包裝材料：Pb+Hg+Cd+Cr VI 含有濃度基準總共合計 80 ppm 以下。

1. 安全注意事項：

使用前請詳閱本手冊與所搭配的縫紉機說明書，並請注意下列事項

- 安裝及操作須由受過正確訓練的人員來執行，拆卸安裝動作前請先關閉電源拔掉插頭並等待 5 分鐘。
- 本驅動裝置僅適用於指定範圍的縫製機械，請勿移做其他用途。
- 電源電壓請遵照馬達與控制箱銘牌所標示之規格 ±10 %範圍內操作。

※注意：控制箱電源規格如為 AC 220V 時，請勿插接到 AC 380V 的電源插座上，否則將出現異常且馬達將無法動作。此時請立即關閉電源開關，重新檢查電源。持續供應 380V 超過五分鐘以上，將可能燒損電源入力的保險絲及電解電容而危及人身安全。

- 請遠離高週磁波機器或電波發射器等，以免所產生的電磁波干擾本驅動裝置因而發生誤動作。
- 請不要在日光直接照射的場所、室外及室溫 45°C 以上或 5°C 以下的場所操作。
- 請不要在暖氣(電熱器)旁、有露水的場所及在相對濕度 30 % 以下或 95 % 以上的場所操作。
- 請不要在灰塵多的場所、具有腐蝕性物質的場所及有揮發性氣体的場所操作。
- 請注意不要被外物壓住或過度扭曲電源線。
- 為防止雜訊干擾或漏電事故，請做好接地工程。
- 在第一次開電後，請先以低速操作縫紉機並檢查轉動方向是否正確。
- 縫紉機運轉時，請不要去觸摸皮帶輪、天枰、針等會動作的部位。
- 所有可動作的部份，必須以所提供的防護裝置加以隔離，防止身體接觸並請勿在裝置內塞入其他物品。
- 修理及保養須由經過訓練的技術人員執行，而所有維修用的零件須由本公司提供或認可，方可使用。
- 請不要以不適當物體來敲擊或撞擊本產品裝置。

危險標示、注意標示

這個標示符號表示機器安裝時，如有錯誤恐會傷害到人體或機器會受到損壞，所以機器方面有危險性的地方會有此標示。

這個標示符號表示有高壓電，電氣方面有危險性的地方會有此標示。

保固期限

本裝置保證在正常工作情況且無人為失誤的操作下，保證出廠 18 個月內，無償的為客戶維修使能正常操作。

但以下情況於保固期間將得以收取維修費用:

1.不當使用包括誤接高壓電源、將產品移做其它用途、自行拆卸、維修、更改、或不依規格範圍使用、進水進油及插入異物於本產品。

2.火災、地震、閃電、風災、水災、鹽蝕、潮濕、異常電壓及其它天災或不當場所造成之損害。

3.客戶購買後摔落本產品，或客戶自行運輸(或託付之運輸公司)所造成之損害。

*本產品於生產及測試上皆盡最大努力和嚴格控管使其達到高品質及高穩定的標準，但外部之電磁或靜電干擾或不穩定的供應電源，仍可能對本產品造成影響或損害，因此操作場所的接地系統一定要確實做好，並建議客戶安裝故障安全防護裝置(如漏電電驛)。

2. 安裝說明：

HD 系列的安裝方式

將控速器及控制箱鎖裝於車板下方。

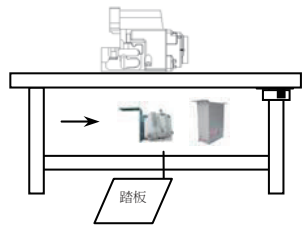

注　意：
安裝及調整前請確定已關掉電源開關及拔掉插頭以利人身安全。

馬達安裝

拷克車模式：

1. 將車頭的皮帶輪及散熱風葉卸下。
2. 將墊片放入車頭心軸後再放入馬達心軸。並利用端面螺絲迫緊馬達心軸。
   注意：馬達心軸上紅點記號的 set 螺絲固定於車頭心軸平面或凹槽上。
3. 將馬達支架固定於車頭上。
4. 將組裝治具放入馬達本體後，馬達本體連同組裝治具套入馬達心軸上，再將馬達本體順著組裝治具推向馬達支架端面。將螺絲鎖緊固定後，再將組裝治具取出。注意：馬達心軸上黏著強力磁石，本體推向車頭平面注意強力磁石的吸引力，避免手指夾傷或馬達本體碰撞，造成損壞。組裝治具每安裝一台即報廢，不可以重複使用。
5. 將馬達手輪放入心軸並推至靠面後，鎖緊 set 螺絲及完成。注意：鎖緊手輪前，先將車頭轉動至上定位點後，轉動手輪，使手輪端面圓點對準馬達本體記號後，固定手輪 set 螺絲。馬達運轉停針時，即可停於針上位置。
   若停針位置不滿意，可放鬆手輪左右微調至滿意位置後固定即可。

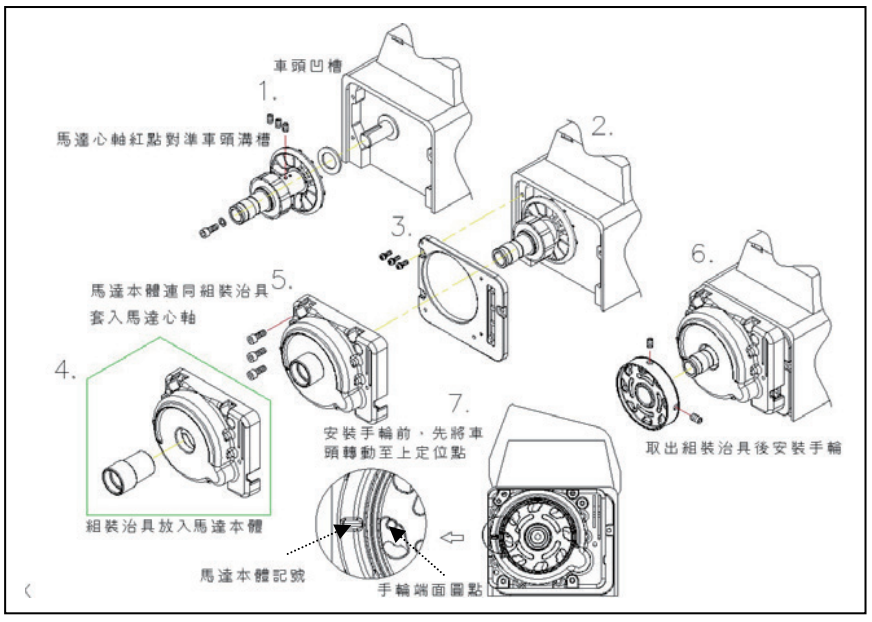

控速器的調整

	調整需求	調 整 結 果
1	踏板前踏 力量的調整	當彈簧 A 愈向右側勾時，表示力量的愈重。 當彈簧 A 愈向左側勾時，表示力量的愈輕。
2	踏板後踏 力量的調整	當螺栓 B 愈向上 時，則後踏力量愈輕。 當螺栓 B 愈向下 時，則後踏力量愈重。
3	踏板行程 長短的調整	當吊桿 D 向右側孔鎖裝時，表示行程較長。 當吊桿 D 向左側孔鎖裝時，表示行程較短。

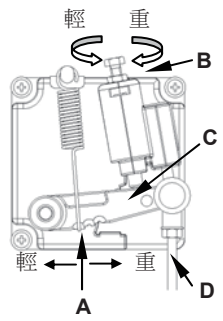

注　意：
調整前請確定已關掉電源開關及拔掉插頭以利人身安全。

控速器各部位名稱：如圖示
A：前踏力量彈簧。
B：後踏力量的調整螺栓。
C：踏板旋臂。
D：腳踏板吊桿。

3. 控制面板按鍵說明：

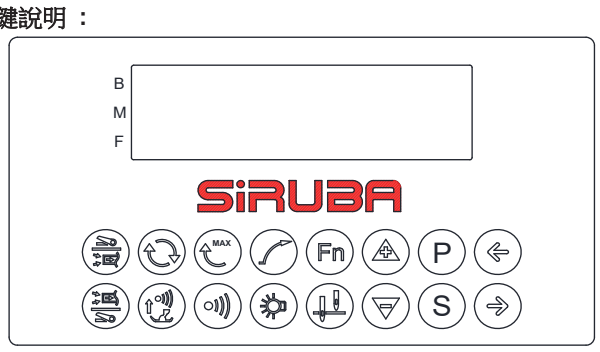

按鍵定義說明：

P	長按兩秒進入參數設定(001~030) / 參數碼遞增功能鍵		電眼連動壓腳動作，開啟、關閉設定功能鍵
S	進入參數 (031~070) / 參數儲存鍵		電眼功能，開啟、關閉設定功能鍵
	數值遞增鍵		針停位置，針上、針下設定功能鍵
	數值遞減鍵		多功能接布，開啟、關閉設定功能鍵
	031:SAB 功能開啟、關閉	Fn	計件功能鍵
	034:SAE 功能開啟、關閉		慢速啟縫功能 ON / OFF
	全自動車縫，開啟、關閉設定功能鍵		
MAX	半自動車縫，開啟、關閉設定功能鍵		

3.1 端子座示意圖

DC+12V LAMP		
1	LED_GND	LED_GND
2	+12V	+12V

OPTION		
1	+24V	+24V
2	OF	AFL
3	+24V	+24V
4	OD	TENSION
5	+24V	+24V
6	OC	ASL
7	+24V	+24V
8	+24V	+24V
9	O2	NCL
10	INF	NOP
11	INL	SAFETY SW.(S6F)
12	0V	0V
13	IN2	SAFETY SW.(S6H)
14	+5V	+5V
15	IN1	KS1 SW.
16	OA	TK

SENSOR		
1	0V	0V
2	CALF	CALF
3	+5V	+5V
4	SENSORF	SENSORF
5	+5V	+5V
6	SENSORM	SENSORM
7	CALM	CALM
8	0V	0V
9	+5V	+5V
10	SENSORB	SENSORB
11	CALB	CALB
12	0V	0V

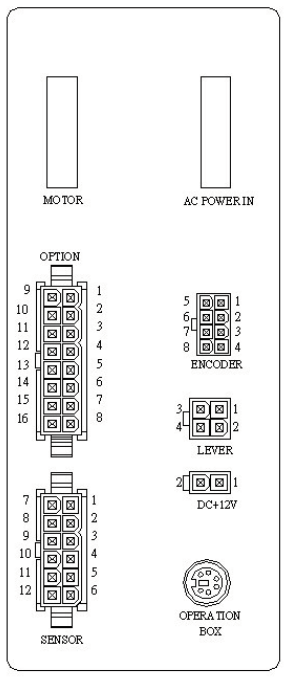

ENCODER	
1	+5V
2	UP
3	DOWN
4	R
5	S
6	T
7	---
8	0V

OPERATION BOX	
1	U SW.
2	R1in
3	+12V
4	T1out
5	0V
6	CKU

LEVER	
1	+5V
2	VC
3	INF
4	0V

4. 常用參數列表：

按住 P 鍵 2 秒				
參數代碼		參數功能	調整範圍	設定值
001	HS	最高速度	200-7500 spm	6000
002	LS	最低速度	200-500 spm	200
003	AS	自動運轉速度	200-6000 spm	5000
004	S	起縫慢針速度	200-6000 spm	3000
005	SLS	起縫慢針針數	1-99 stitches	30
006	SLM	起縫慢針模式	OFF / A / T	OFF
007	SP	車頭運轉速度顯示	-	0
008	OPM	操作模式	NOP / MA / OT/ A	NOP
009	PSN	前電眼沒布踏板踩下馬達運行	ON / OFF	OFF
010	SMP	後段吸風[036. RSN]工序速度控制	A / M	M
011	STP	工序自動重置功能	ON / OFF	ON
012	FPM	保護押腳電磁鐵	ON / OFF	ON
013	FP	押腳電磁鐵保護時間	1-300 sec	120
014	AFP	電眼連動押腳抬起時間	100-5000 ms	800
015	FD	押腳放下後延遲時間	100-2500 ms	50
016	AFL	結束自動抬押腳	ON / OFF	OFF
017	AFT	前電眼延遲押腳下放時間	100-5000 ms	400
018	HD	半後踏確認時間	0-990 ms	100
019	HHC	取消半後踏抬押腳	ON / OFF	OFF
020	FHC	取消全後踏結束工序	ON / OFF	OFF
021	SVC	啟動電壓位準	0-9	0
022	TVC	切線電壓位準	0-9	0
023	SFF	押腳安全開關	ON / OFF	ON
024	SFH	側蓋安全開關	ON / OFF	ON
025	SFM	安全開關模式	NC / NO	NO
026	BUZ	蜂鳴器	ON / OFF	ON
027	ANU	開電自動找針上	ON / OFF	OFF
028	CHK	動作功能檢查選擇	0-9	0
029	FAS	儲存出廠設定	YES / NO	NO
030	FLO	恢復出廠設定	YES / NO	NO
按住 S 鍵 2 秒				
031	SAB	前吸風功能	ON / OFF	ON
032	FDS	前吸風延遲開啟針數	0-99	0
033	FSN	前吸風針數	0-70	7
034	SAE	後段吸風功能	ON / OFF	OFF
035	BDS	後吸風延遲開啟針數	0-250	0
036	RSN	後吸風針數	0-99	0
037	LFB	前鬆線功能	ON / OFF	OFF
038	LFD	前鬆線延遲開啟針數	0-30	0
039	FLS	前鬆線針數	0-20	1
040	LFE	後鬆線功能	ON / OFF	OFF
041	LPS	後鬆線提前關閉針數	0-3	0
042	LSE	後鬆線延遲開啟針數	0-70	15
043	LES	後鬆線針數	0-70	0
044	TCB	前斬刀功能	ON / OFF	ON
045	FKN	前斬刀次數	1-20	1
046	FDT	前斬刀連動斬刀吸風時間	0-9990 ms	100
047	FDN	前斬刀針數	0-999	7
048	TCE	後斬刀功能	ON / OFF	ON
049	RKN	後斬刀次數	1-20	1
050	RDT	後斬刀完成連動吸風時間	0-9990 ms	0
051	RDN	後斬刀針數	0-999	1
052	KCT	斬刀開啟時間	10-990 ms	50

參數代碼		參數功能	調整範圍	設定值
053	KDT	斬刀關閉時間	10-990 ms	50
054	MTC	手動斬刀保護模式	ON / OFF	OFF
055	KLM	手動斬刀吸風功能	ON / OFF	ON
056	KST	手動斬刀前吸風動作時間	0-990 ms	0
057	KET	手動斬刀後吸風動作時間	0-990 ms	200
058	WSN	吸布屑關閉針數	0-999 stitches	50
059	WST	吸布屑開啟針數	0-200 stitches	5
060	FCS	電眼偵測到布全後踏模式	OFF / NS / WS	OFF
061	ADT	後吸風延遲動作時間	0-2500 ms	0
062	RDD	後斬刀完延遲吸風時間	0-2000	100
063	SDR	後切刀馬達停止啟動時間	0-9990 ms	50
064	TCT	切刀手動/自動模式	A / M	A
065	FTC	前斬刀工序動作模式	ON / OFF	OFF
066	SEM	定針縫模式	OFF / A / M	OFF
067	SE	定針縫針數設定	0-9999 stitches	100
068	RKM	後電眼管制斬刀模式	ON / OFF	OFF
按住 P 鍵+前斬刀鍵 2 秒				
071	MAC	機器碼	NOP / ECA / ECB / VTE / CTE / VTA / BKT / UC / SD	ECA
072	INF	INF 功能選擇	NOP / PTM / OP / TK / TK1 / KSA / KSM / F / S6 / S6F / S6H / SHN/ BWL / BWH	NOP
073	INL	INL 功能選擇	NOP / PTM / OP / TK / TK1 / KSA / KSM / F / S6 / S6F / S6H / SHN	S6F
074	BWM	斷線檢知器重置模式	0 / 1	1
075	DIR	電機旋轉方向	CW / CCW	CW
076	DD	電機符號旋轉方向	ON / OFF	ON
077	NUD	停針位置選擇	UP / DN / UDN	UP
078	SIN	定位模式	0-2	0
079	NU	針上定位信號模式	L / H	L
080	PUA	虛擬針上位置	0	0
081	PDA	虛擬針下位置	6-18	12
082	DVM	鬆線模式	EFK / PEG	PEG
083	BWN	斷線檢知器針數	0-99	20
084	ML	馬達運轉信號	ON / OFF	ON
085	FLW	全後踏連動斬刀吸風	ON / OFF	OFF
086	INB	INB 輸入功能選擇	NOP / PTM / OP / TK / TK1 / KSA / KSM / F / S6 / S6F / S6H / SHN	PTM
087	IN1	IN1 輸入功能選擇	NOP / PTM / OP / TK / TK1 / KSA / KSM / F / S6 / S6F / S6H / SHN	TK
088	IN2	IN2 輸入功能選擇	NOP / PTM / OP / TK / TK1 / KSA / KSM / F / S6 / S6F / S6H / SHN	S6H
089	OA	OA 輸出功能選擇	NOP / TK / OP / OM / ML / NCL / NCW / ASL / ASW / MLL / OP1 / TOE / FNC / MLB	TK
090	OB	OB 輸出功能選擇	NOP / TK / OP / OM / ML / NCL / NCW / ASL / ASW / MLL / OP1 / TOE / FNC / MLB	NOP
091	OC	OC 輸出功能選擇	NOP / TK / OP / OM / ML / NCL / NCW / ASL / ASW / MLL / OP1 / TOE / FNC / MLB	ASL
092	OD	OD 輸出功能選擇	NOP / TK / OP / OM / ML / NCL / NCW / ASL / ASW / MLL / OP1 / TOE / FNC / MLB	NOP

參數代碼		參數功能	調整範圍	設定值
093	O1	O1 輸出功能選擇	NOP / TK / OP / OM / ML / NCL / NCW / ASL / ASW / MLL / OP1 / TOE / FNC / MLB	NOP
094	O2	O2 輸出功能選擇	NOP / TK / OP / OM / ML / NCL / NCW / ASL / ASW / MLL / OP1 / TOE / FNC / MLB	ASW
095	TM1	自動運轉 on 時間設定	1-250	50
096	TM2	自動運轉 oFF 時間設定	1-250	50
097	UTD	自動運轉功能	ON / OFF	OFF
098	TOA	自動運轉時間顯示	-	-
099	TOT	自動運轉測試時間設定	1-500 hr	240
100	VER	軟體版本顯示	-	-
101	ACT	加速時間調整	100-990	160
102	DCT	減速速時間調整	150-990	160
103	KP	速度 KP 增益	2-15	4
104	KI	速度 KI 增益	10-99	20
105	BKI	制動 KI 增益	5-15	8
111	HL	最高速度的上限	200-7500 spm	7500
116	PTM	電眼類型選擇	0 / 1	0
120	LUM	外部照明燈亮度調整	0 / 50 / 100 / 150 / 200 / 250	200
按住 P 鍵+後斬刀鍵 2 秒				
121	IDC	密碼功能	ON / OFF	ON
122	MAV	最高電壓紀錄顯示	-	-
123	MIV	最低電壓紀錄顯示	-	-
124	PV	目前電壓顯示	-	-
125	ER	故障碼顯示	-	-
126	FTP	押腳與斬刀電磁鐵型式	A / M	A
127	FO	押腳全額出力時間調整	0 - 990	250
128	FC	押腳與斬刀佔空比調整	10 - 50	25
129	TO	斬刀全額出力時間調整	0 - 990	40
130	CAL	電眼校正	NA / Front / Mid / Back	NA
131	FBS	前中電眼間隔針數設定	1-100	100
132	FN	前電眼 ON 防彈跳	0-3000 ms	5
133	FF	前電眼 OFF 防彈跳	0-3000 ms	5
134	BN	中、後電眼 ON 防彈跳	0-3000 ms	5
135	BF	中、後電眼 OFF 防彈跳	0-3000 ms	5
136	ESS	車縫布料種類選擇	ON / OFF	OFF
137	FDF	前電眼針數	1-99	5
138	BDF	後電眼針數	1-99	5
139	ATF	氣動切線開啟/關閉	ON / OFF	OFF
140	AVT	電磁閥單次動作時間	1-300	50
141	ACC	氣動切線機構作動次數	1-100	8
142	MUS	馬達緊急停止功能	ON / OFF	ON
143	ACR	輔助切線馬達速度	200-5000	0
144	ACS	輔助切線運轉針數	1-255	20
145	LOO	馬達停止延遲針數	0-99	5
146	LS1	鬆線時吸線頭時間	0-9990	1200
147	CST	吸線頭時間 1	0-9990	1200
148	MSD	起縫時鬆線針數設定	0-200	10

參數代碼		參數功能	調整範圍	設定值
149	MDS	吸線頭時間 2	0-200	15
150	STA	總針數顯示	0-200	0
151	NCT	一般模式後踏切刀開關	0-9999	ON
152	UC	內外防捲模式	IN / OUT / ALL	IN
153	CCS	後踏吸風開關	ON / OFF	OFF
154	FFO	前踏/完成件數訊號開關	ON / OFF	OFF
155	NUS	針上/異常訊號開關	ON / OFF	OFF
156	LAN	液晶面板語言選擇	English / 繁體中文 / 簡體中文	English
157	LCD	LCD 背光亮度	0% - 100%	40

5. 簡易故障排除：

故障碼警示	出 現 時 機	狀 態 與 對 策
E.4	1. 電源 ON 時，檢知到電源電壓過高。 2. 插錯使用之供應電源。	馬達將關閉成無動作狀態。 請檢查供應此控制箱之 AC 電源是否正確。
E.7	1.馬達插頭配線接觸不良導致不轉。 2.定位器信號異常。 3.車頭機構鎖住或馬達皮帶輪異物捲入卡住。 4.加工物過厚，馬達扭力不足無法貫穿。	馬達將關閉成無動作狀態。 請檢查定位器信號是否異常。 請檢查車頭是否卡住或轉動困難。
E.P	電源開啟時，控速器未在中立位置。	將控速器回復至中立位置即可操作。

6. 七段顯示器字體與實際數值對照表：

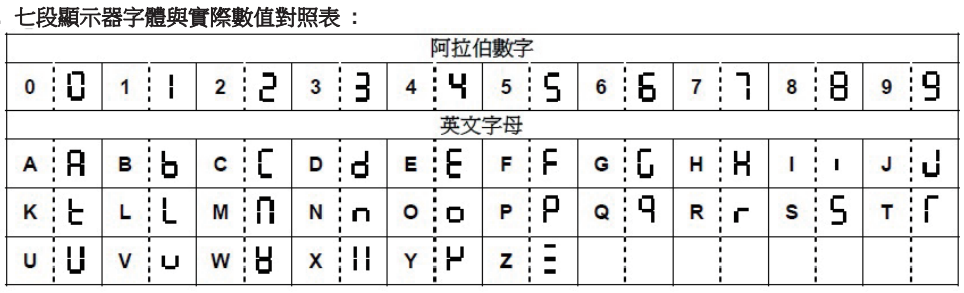

版權所有・翻印必究

電控參數說明書

ELECTRONIC CONTROL PARAMETER MANUAL

SiRUBA ELECTRIC SYSTEM
KAULIN MFG. CO., LTD.

700LD

CE

Self-declaration of Conformity of EC directives:

We hereby declare that the following product series:
AC servo motor—TD series
conforms with the provision of the EC directives as follows:

-EC Low Voltage Directive (2014/35/EU)
-EC Electromagnetic Compatibility Directive (2014/30/EU)
-EC Machinery Directive (2006/42/EC)

as well as related safety standards as follows:

EN ISO 12100:2100- Safety of machinery. Basic concepts, General principles for design.

EN 60204-1:2006/AC:2010 - Safety of machinery-Electrical equipment of machines.

EN 60204-31:2013 / Safety of machinery - Safety of Electrical equipment of machines.

Self-declaration of Conformity of directives for Concentration Limits for Certain Hazardous Substances

We hereby declare that the following product series:
AC servo motor—TD series
conforms with the provision of the directives as follows:

1. EU RoHS directive(2011/65/EU)&(EU)2015/863)
2. People's Republic of China Electronic Business Standard: Requirement of concentration limits for certain hazardous substances in electronic communication products

(SJ/T 11363-2006)

Our product itself (motor, control box) or its packing materials and accessories (box, screw/ accessory package, user manual, sticker, label, printing materials…etc.) or the suppliers of parts and raw materials conform with the provision of the European Union RoHS Directive and requirement of concentration limits of People's Republic of China Electronic Business Standard, thereby complying with the requirement of concentration limits for the ten hazardous substances listed as follows:

Hazardous Substance	Permissible Values
Lead (Pb)	1000
Mercury (Hg)	1000
Cadmium (Cd)	100
Hexavalent chromium (Cr VI)	1000
Polybrominated Biphenyl (PBB)	1000
Polybrominated Diphenyl ether (PBDE)	1000
Di(2-ethylhexyl)phthalate (DEHP)	1000
Butyl Benzyl Phthalate (BBP)	1000
Dibutyl phthalate (DBP)	1000
Diisobutyl phthalate (DIBP)	1000

∗The concentration of lead in the lead-free process of PCB should be less than 800 ppm.
∗Packing materials: The total concentration of Pb+Hg+Cd+Cr VI should be less than 80 ppm.

1. Safety Precaution:

Please read this manual with sewing machine manual thoroughly and pay attention to the following safety precaution.

- Installation and operation must be done by the trained personnel. Before disassembly/ installation, please turn off the power switch and remove the plug from outlet and wait for 5 minutes.
- This product is designed for specific sewing machines and must not be used for other purposes.
- The power voltage applied should be within the range of ±10 % of the specification on the name plates of the motor and control box.

※Attention : If the power specification of the control box is AC 220V, please don't connect to AC 380V power outlet. Otherwise, the abnormality will occur and motor will not function. In this case, please turn off the power switch immediately and check the power voltage. Continuous supply of 380V over 5 minutes might damage the fuse of the power input and the electrolytic capacitors, endangering the safety of users.

- Keep away from the high frequency magnetic wave devices/ transmitters to avoid the resulting electromagnetic waves from affecting this driving equipment, leading to abnormal operation.
- Don't operate in places under direct sun light, outdoors and in places with room temperature above 45°C or below 5°C.
- Don't operate near the heater, places with dew and places with humidity below 30 % or above 95%.
- Don't operate in dusty places, places with corrosive materials, places with volatile gases.
- Avoid external objects on power cord or excessive distortion of power cord.
- To prevent the interference of noises and current leakage, all grounding works should be done properly.
- When powering for the first time, please operate the sewing machine in low speeds and check whether the rotation direction is correct.
- When the sewing machine is in operation, avoid contact with any moving parts such as belts, needles, etc.
- All moving parts should be properly isolated with the provided protective devices to avoid the body contact and foreign objects should not be inserted within these devices.
- Repair and maintenance should be performed by the properly trained technical personnel. In addition, all spare parts used for repair should be provided or approved by our company.
- Don't hit or slam the product body with any unsuitable objects.

Danger/ caution signs

This marking symbol indicates that during the installation of device, if error occurs, there can be risks leading to injury to human body or damage to the machine. Therefore, any place of machine with such probability of dangers will have this marking.

This marking symbol indicates that there will be high electrical voltages, places with electrical probability of dangers.

Warranty Period

Under normal working condition and operation without human errors, the guarantee of this device entitles repair without any compensation within 18 months from the factory shipping date.

However, repair fee can be charged under the following conditions even within warranty period:

1. Inappropriate uses include: connecting to high voltages wrongly, using products for other applications, disassemble, repair, modification by oneself, or operate not according to specification, introduction of water/ oil or inserting foreign objects into the product.
2. Damage caused by fire, earthquake, lightning, typhoon, flood, salt erosion, moisture, abnormal voltages and any other natural disasters or inappropriate environments.
3. Damage caused by dropping after purchase or transportation by customers themselves. (or by customer's shipping agencies)

Note: We place our best effort and strict control in the manufacture and testing to achieve high quality and reliability of this product, but external electromagnetic or electrostatic interference or unstable power supply may still affect or damage this product. Therefore, the grounding system of operating places should be properly done. Customers are recommended to install safety protection devices (such as current leakage relay).

2. Installation :

HD42 Installation

Mounts speed control unit and control box under the sewing machine table.

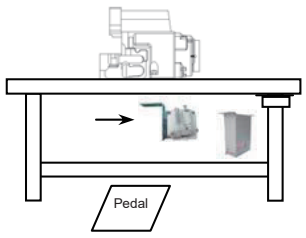

Caution :
For person safety, turn off the power switch and remove the power plug from outlet before any adjustment.

Motor Installation

Overlock Mode:

1. Take off the pulley of sewing machine, remain the exhaust fan.
2. Put washer into the shaft of sewing machine then put it in the shaft of motor, to use screw to screw tight the shaft of the motor. Note: the red mark on motor to fix on the shaft of sewing machine by set screw.
3. Fix motor on sewing machine.
4. Put a fixture to motor then set into motor shaft, push motor to sewing machine end face by a fixture.
   Note: Motor shaft sticking strong magnet, pleases pay attention to powerful magnetic while force motor to sewing machine to avoid damage the motor or hurt your finger. Pleases throw away the assemble tooling after assembled one machine. It is prohibit to use assemble tooling repeat.
5. Put motor pulley to motor shaft then tighten the screw.
   Note: pleases turn the sewing machine to up position before tighten the pulley and fix the set screw on the pulley. After that the needle at up position while motor is stop running. Pleases release the pulley to process micro adjustment on pulley if the needle stop position is not satisfied.

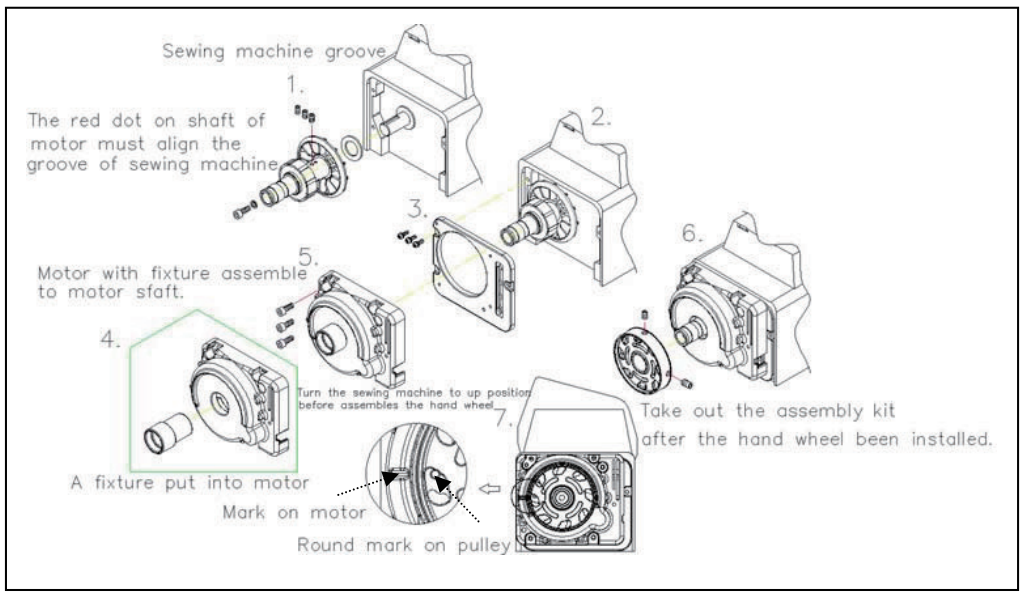

Speed Control Unit Adjustment

	Term of adjustment	Adjustment result
1	Toeing forward force adjustment	Spring A move to right = force increased Spring A move to left = force decreased
2	Heeling backward force adjustment	Bolt B turn ⟲ = force decreased Bolt B turn ⟳ = force increased
3	Pedal stroke adjustment	Rod D secure at right = stroke is longer Rod D secure at left = stroke is shorter

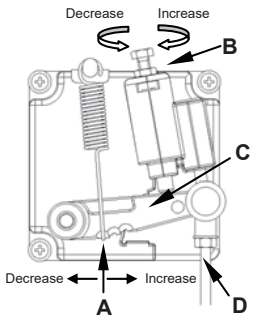

Caution :
For person safety, turn off the power switch and remove the power plug from outlet before any adjustment.

Components of speed control unit : see figure

A: Spring for toeing forward force adjustment
B: Bolt for heeling backward force adjustment
C: Pedal arm
D: Pitman rod for pedal

3. Panel Key Functions :

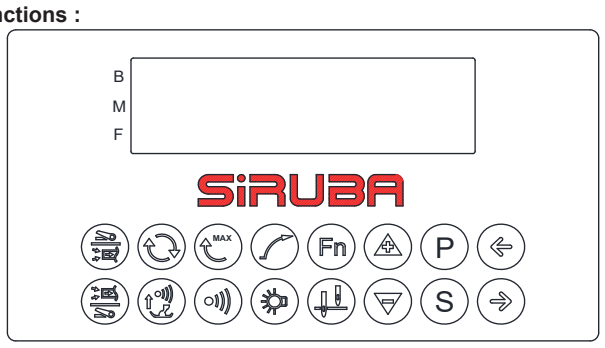

Description Of Key

P	Press and hold 2 seconds to enter parameter setting (001~030)		The key to act or close function for sensor and presser foot lifting act at same time
S	Hold and turn on the power at same time to enter parameter (031~070)/ parameter saving		The key to act or close the sensor
	Display value increased		The key to act or close needle up/down
	Display value decreased		To act or close multi fabric joint together
	031:SAB ON / OFF	Fn	Count
	034:SAE ON / OFF		Sensor LED light
	To act or close sewing full automatically		
MAX	To act or close semi sewing automatically		

3.1 Connector Diagram

DC+12V LAMP		
1	LED_GND	LED_GND
2	+12V	+12V

OPTION		
1	+24V	+24V
2	OF	AFL
3	+24V	+24V
4	OD	TENSION
5	+24V	+24V
6	OC	ASL
7	+24V	+24V
8	+24V	+24V
9	O2	NCL
10	INF	NOP
11	INL	SAFETY SW.(S6F)
12	0V	0V
13	IN2	SAFETY SW.(S6H)
14	+5V	+5V
15	IN1	KS1 SW.
16	OA	TK

SENSOR		
1	0V	0V
2	CALF	CALF
3	+5V	+5V
4	SENSORF	SENSORF
5	+5V	+5V
6	SENSORM	SENSORM
7	CALM	CALM
8	0V	0V
9	+5V	+5V
10	SENSORB	SENSORB
11	CALB	CALB
12	0V	0V

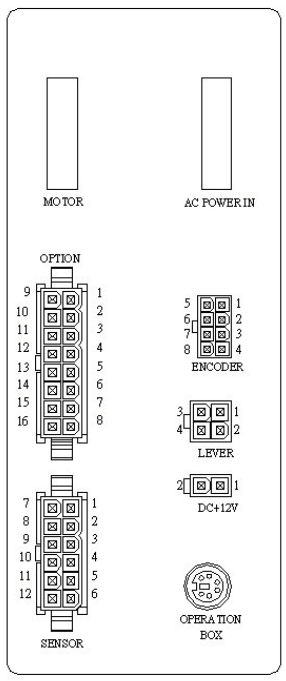

ENCODER	
1	+5V
2	UP
3	DOWN
4	R
5	S
6	T
7	---
8	0V

OPERATION BOX	
1	U SW.
2	R1in
3	+12V
4	T1out
5	0V
6	CKU

LEVER	
1	+5V
2	VC
3	INF
4	0V

4. General Parameter List :

Parameter NO.		Parameters Function	Range	Pre.setting for
Hold the "P" key for two seconds				
001	HS	Maximum sewing speed	200-7500 spm	6000
002	LS	Low speed	200-500 spm	200
003	AS	Slow start	200-6000 spm	5000
004	S	Slow start speed	200-6000 spm	3000
005	SLS	Stitch of slow start	1-99 stitches	30
006	SLM	Speed for rear air suction step	OFF / A / T	OFF
007	SP	Rear air suction	-	0
008	OPM	Speed for automatic sewing at end	NOP / MA / OT/ A	NOP
009	PSN	Speed of motor run at automatically	ON / OFF	OFF
010	SMP	Selection of sensor	A / M	M
011	STP	Selection for top sensor level	ON / OFF	ON
012	FPM	Stitch setting for sensor detection	ON / OFF	ON
013	FP	Safety device	1-300 sec	120
014	AFP	Enter trimming sequence after left the sensor	100-5000 ms	800
015	FD	Step reset	100-2500 ms	50
016	AFL	Type selection for pedal	ON / OFF	OFF
017	AFT	(L) Multi tension release	100-5000 ms	400
018	HD	(d) Multi sensor stitches detection	0-990 ms	100
019	HHC	The size of the needle selection mode	ON / OFF	OFF
020	FHC	Stitch correction	ON / OFF	OFF
021	SVC	(TA) Time for presser foot lifting activate	0-9	0
022	TVC	(TB)Delay time for foot lifter drop down	0-9	0
023	SFF	Foot lifting at motor stop	ON / OFF	ON
024	SFH	Full on time foot lifter	ON / OFF	ON
025	SFM	Time setting for foot lifter drop down	NC / NO	NO
026	BUZ	Factory setting	ON / OFF	ON
027	ANU	Recovery to factory setting	ON / OFF	OFF
028	CHK	Trimming potential at full hell back the pedal	0-9	0
029	FAS	Presser foot lifter selection at half hell back the pedal	YES / NO	NO
030	FLO	Function selection at full heel back the pedal	YES / NO	NO
Hold the "S" key for two seconds				
031	SAB	Front air suction	ON / OFF	ON
032	FDS	Stitch for front air suction delay	0-99	0
033	FSN	Stitch setting for suction at start	0-70	7
034	SAE	Rear air suction	ON / OFF	OFF
035	BDS	Stitch for rear air suction delay	0-250	0
036	RSN	Stitch setting for suction at end	0-99	0
037	LFB	Front thread releases	ON / OFF	OFF
038	LFD	Stitch for front thread release delay	0-30	0
039	FLS	Stitch setting for thread release at start	0-20	1
040	LFE	Rear thread release	ON / OFF	OFF
041	LPS	Stitch setting for thread release close earlier	0-3	0
042	LSE	Stitch setting at thread release delay at end	0-70	15
043	LES	Rear tension release stitches setting	0-70	0
044	TCB	Front cutter function selection	ON / OFF	ON
045	FKN	Front cutter number of times	1-20	1
046	FDT	Front cutter link air saving	0-9990 ms	100
047	FDN	Stitches between sensor detected and front tape cutter activated	0-999	7
048	TCE	Tape cutter for rear step	ON / OFF	ON
049	RKN	Number of time for rear tape cutter	1-20	1
050	RDT	Interval time for rear tape cutter stop to air suction stop	0-9990 ms	0
051	RDN	stitches between sensor detected and rear tape cutter activated	0-999	1
052	KCT	Time setting for tape cutter	10-990 ms	50

Parameter NO.		Parameters Function	Range	Pre.setting for
053	KDT	Tape cutter interval delay time	10-990 ms	50
054	MTC	Manual tape cutter	ON / OFF	OFF
055	KLM	Tape cutter link air suction	ON / OFF	ON
056	KST	Time setting for air suction before tape cutter activated	0-990 ms	0
057	KET	Time setting for air suction stop after tape cutter activated	0-990 ms	200
058	WSN	Interval stitch for indirect air suction	0-999 stitches	50
059	WST	Time setting for indirect air suction	0-200 stitches	5
060	FCS	Heal balk to cancel unfinished step	OFF / NS / WS	OFF
061	ADT	Delay time for air suction after the step finished	0-2500 ms	0
062	RDD	Militia-step function selection	0-2000	100
063	SDR	Reserved	0-9990 ms	50
064	TCT	Reserved	A / M	A
065	FTC	Middle speed stitches setting	ON / OFF	OFF
066	SEM	Middle speed	OFF / A / M	OFF
067	SE	Sensor function , If sewing machine run after sensor covered at the start seam.	0-9999 stitches	100
068	RKM	Type selection for foot lifting solenoid	ON / OFF	OFF
Hold the "P" + "TCB" key for two seconds				
071	MAC	Machine code	NOP / ECA / ECB / VTE / CTE / VTA / BKT / UC / SD	ECA
072	INF	INF Input function Select	NOP / PTM / OP / TK / TK1 / KSA / KSM / F / S6 / S6F / S6H / SHN/ BWL / BWH	NOP
073	INL	INL Input function Select	NOP / PTM / OP / TK / TK1 / KSA / KSM / F / S6 / S6F / S6H / SHN	S6F
074	BWM	---	0 / 1	1
075	DIR	Direction of motor rotation	CW / CCW	CW
076	DD	Direct drive or belt drive	ON / OFF	ON
077	NUD	Selection of needle position	UP / DN / UDN	UP
078	SIN	Single positioning signal synchronizer	0-2	0
079	NU	Define the UP positioning signal mode H/L	L / H	L
082	DVM	Type of thread release	EFK / PEG	PEG
083	BWN	Safety switch	0-99	20
084	ML	Motor running function selection (MLL output)	ON / OFF	ON
085	FLW	Full heeling pedal with ASL / ASW function	ON / OFF	OFF
086	INB	INB input	NOP / PTM / OP / TK / TK1 / KSA / KSM / F / S6 / S6F / S6H / SHN	PTM
087	IN1	IN1 input	NOP / PTM / OP / TK / TK1 / KSA / KSM / F / S6 / S6F / S6H / SHN	TK
088	IN2	IN2 input	NOP / PTM / OP / TK / TK1 / KSA / KSM / F / S6 / S6F / S6H / SHN	S6H
089	OA	OA output	NOP / TK / OP / OM / ML / NCL / NCW / ASL / ASW / MLL / OP1 / TOE / FNC / MLB	TK
090	OB	OB output	NOP / TK / OP / OM / ML / NCL / NCW / ASL / ASW / MLL / OP1 / TOE / FNC / MLB	NOP
091	OC	OC output	NOP / TK / OP / OM / ML / NCL / NCW / ASL / ASW / MLL / OP1 / TOE / FNC / MLB	ASL

Parameter NO.		Parameters Function	Range	Pre.setting for
092	OD	OD output	NOP / TK / OP / OM / ML / NCL / NCW / ASL / ASW / MLL / OP1 / TOE / FNC / MLB	NOP
093	O1	O1 output	NOP / TK / OP/ OM / ML / NCL/ NCW / ASL/ ASW / MLL/ OP1 / TOE/ FNC / MLB	NOP
094	O2	O2 output	NOP / TK / OP/ OM / ML / NCL/ NCW / ASL/ ASW / MLL/ OP1 / TOE/ FNC / MLB	ASW
095	TM1	Auto-running on time.	1-250	50
096	TM2	Auto-running off time.	1-250	50
097	UTD	Auto-running test.	ON / OFF	OFF
098	TOA	Auto-running display.	-	-
099	TOT	Auto-running time setting.	1-500 hr	240
100	VER	Software dersion.	-	-
101	ACT	Acceleration time adj.	100-990	160
102	DCT	Deceleration time adj.	150-990	160
103	KP	Speed_KP_Gain.	2-15	4
104	KI	Speed_KI_Gain.	10-99	20
105	BKI	Brake_KI_Gain.	5-15	8
111	HL	Max speed.	200-7500 spm	7500
116	PTM	Sensor type selection.	0 / 1	0
120	LUM	Sensitivity adjustment for external LED brightenss.	0 / 50 / 100 / 150 / 200 / 250	200
Hold the "P" + "TCE" key for two seconds				
121	IDC	Password Function.	ON / OFF	ON
122	MAV	Maximum voltage hold.	-	-
123	MIV	Minimum voltage hold.	-	-
124	PV	Current voltage display.	-	-
125	ER	Error code display.	-	-
126	FTP	Foot lifting and cutter solenoid type.	A / M	A
127	FO	Full-On time foot lifting solenoid.	0 - 990	250
128	FC	Cycle time setting foot lifting and tape cutter.	10 - 50	25
129	TO	Full-On time setting for tape cutter.	0 - 990	40
130	CAL	Sensor Calibration.	NA / Front / Mid /Back	NA
131	FBS	Interval front and mid sensor.	1-100	100
132	FN	Front eye ON.	0-3000 ms	5
133	FF	Front eye OFF.	0-3000 ms	5
134	BN	Prevent rear eye ON.	0-3000 ms	5
135	BF	Prevent rear eye OFF.	0-3000 ms	5
136	ESS	Fabric Selection.	ON / OFF	OFF
137	FDF	Front Sensor Debounce.	1-99	5
138	BDF	Back Sensor Debounce.	1-99	5
139	ATF	Pneumatic trimming on/off.	ON / OFF	OFF
140	AVT	Solenoid single time.	1-300	50
141	ACC	Pneumatic trimming.	1-100	8
142	MUS	Motor emergency stop.	ON / OFF	ON
143	ACR	Motor speed assistant trimming.	200-5000	0
144	ACS	Rotary stitches assistant trimming.	1-255	20
145	LOO	Motor stop delay.	0-99	5
146	LS1	Loose Line Time.	0-9990	1200
147	CST	Suction Time 1.	0-9990	1200
148	MSD	Suction Stitch 2.	0-200	10

Parameter NO.		Parameters Function	Range	Pre.setting for
149	MDS	Suction Stitch 2.	0-200	15
150	STA	Totally stitches Display.	0-200	0
151	NCT	Trimmer switch in NOP mode.	0-9999	ON
152	UC	Switch for UC/SD mode.	IN / OUT / ALL	IN
153	CCS	Backward Suction switch.	ON / OFF	OFF
154	FFO	Forward complete signal switch.	ON / OFF	OFF
155	NUS	Needle Up error switch.	ON / OFF	OFF
156	LAN	The language selection.	English	English
157	LCD	LCD light.	0% - 100%	40

5. Basic Troubleshooting :

Error code	Cause of the problem	Condition and solution
E.4	1. When power on, higher power voltage has been detected. 2. Connect to a wrong AC power source.	Motor and machine will be shutting down. Please check the AC power source.
E.7	1. Bad connection to the motor connector. 2. Synchronizer (sensor) signal error. 3. Machine locked or object stuck in the motor pulley. 4. Sewing material is too thick.	Motor and machine will be shutting down. Please check the synchronizer (sensor) and its signal. Please check machine head to see if any objects stuck in the motor pulley, or machine does not rotate smoothly.
E.P	Power on, speed control unit is not at neutral position.	Speed control unit return to neutral.

6. 7-Segment Display Characters Compare Table

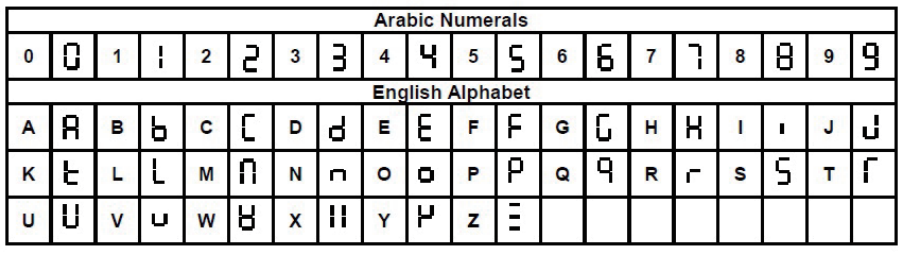

Violators will be prosecuted.